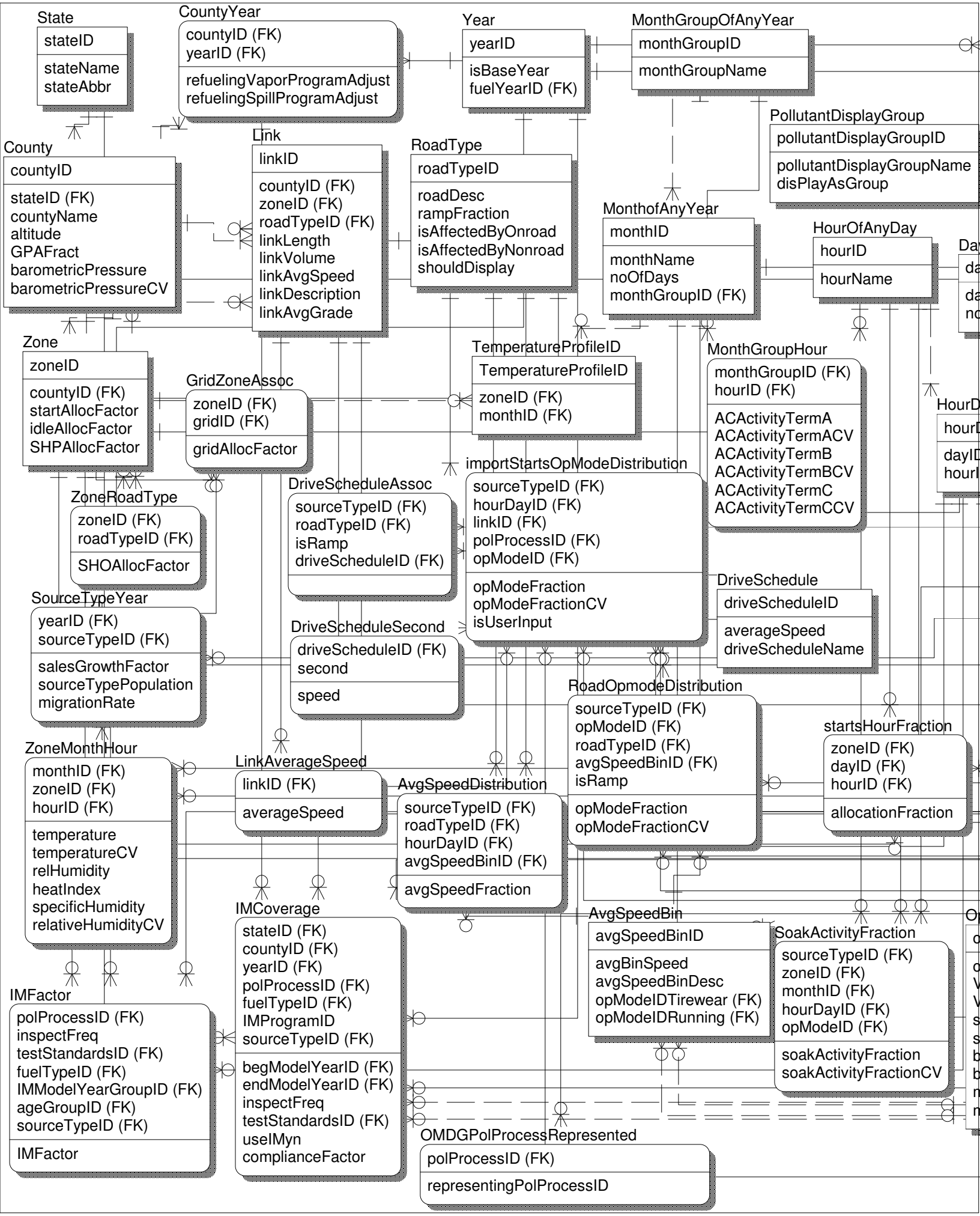
State
stateID
stateName
stateAbbr
CountyYear
countyID (FK)
yearID (FK)
refuelingVaporProgramAdjust
refuelingSpillProgramAdjust
Year
yearID
isBaseYear
fuelYearID (FK)
MonthGroupOfAnyYear
monthGroupID
monthGroupName
PollutantDisplayGroup
pollutantDisplayGroupID
pollutantDisplayGroupName
disPlayAsGroup
County
countyID
stateID (FK)
countyName
altitude
GPAFract
barometricPressure
barometricPressureCV
Link
linkID
countyID (FK)
zoneID (FK)
roadTypeID (FK)
linkLength
linkVolume
linkAvgSpeed
linkDescription
linkAvgGrade
RoadType
roadTypeID
roadDesc
rampFraction
isAffectedByOnroad
isAffectedByNonroad
shouldDisplay
MonthofAnyYear
monthID
monthName
noOfDays
monthGroupID (FK)
HourOfAnyDay
hourID
hourName
Zone
zoneID
countyID (FK)
startAllocFactor
idleAllocFactor
SHPAllocFactor
GridZoneAssoc
zoneID (FK)
gridID (FK)
gridAllocFactor
TemperatureProfileID
TemperatureProfileID
zoneID (FK)
monthID (FK)
MonthGroupHour
monthGroupID (FK)
hourID (FK)
ACActivityTermA
ACActivityTermACV
ACActivityTermB
ACActivityTermBCV
ACActivityTermC
ACActivityTermCCV
ZoneRoadType
zoneID (FK)
roadTypeID (FK)
SHOAllocFactor
DriveScheduleAssoc
sourceTypeID (FK)
roadTypeID (FK)
isRamp
driveScheduleID (FK)
importStartsOpModeDistribution
sourceTypeID (FK)
hourDayID (FK)
linkID (FK)
polProcessID (FK)
opModeID (FK)
opModeFraction
opModeFractionCV
isUserInput
DriveSchedule
driveScheduleID
averageSpeed
driveScheduleName
SourceTypeYear
yearID (FK)
sourceTypeID (FK)
salesGrowthFactor
sourceTypePopulation
migrationRate
DriveScheduleSecond
driveScheduleID (FK)
second
speed
RoadOpmodeDistribution
sourceTypeID (FK)
opModeID (FK)
roadTypeID (FK)
avgSpeedBinID (FK)
isRamp
opModeFraction
opModeFractionCV
startsHourFraction
zoneID (FK)
dayID (FK)
hourID (FK)
allocationFraction
ZoneMonthHour
monthID (FK)
zoneID (FK)
hourID (FK)
temperature
temperatureCV
relHumidity
heatIndex
specificHumidity
relativeHumidityCV
LinkAverageSpeed
linkID (FK)
averageSpeed
AvgSpeedDistribution
sourceTypeID (FK)
roadTypeID (FK)
hourDayID (FK)
avgSpeedBinID (FK)
avgSpeedFraction
IMCoverage
stateID (FK)
countyID (FK)
yearID (FK)
polProcessID (FK)
fuelTypeID (FK)
IMProgramID
sourceTypeID (FK)
begModelYearID (FK)
endModelYearID (FK)
inspectFreq
testStandardsID (FK)
useIMyn
complianceFactor
AvgSpeedBin
avgSpeedBinID
avgBinSpeed
avgSpeedBinDesc
opModeIDTirewear (FK)
opModeIDRunning (FK)
SoakActivityFraction
sourceTypeID (FK)
zoneID (FK)
monthID (FK)
hourDayID (FK)
opModeID (FK)
soakActivityFraction
soakActivityFractionCV
IMFactor
polProcessID (FK)
inspectFreq
testStandardsID (FK)
fuelTypeID (FK)
IMModelYearGroupID (FK)
ageGroupID (FK)
sourceTypeID (FK)
IMFactor
OMDGPolProcessRepresented
polProcessID (FK)
representingPolProcessID

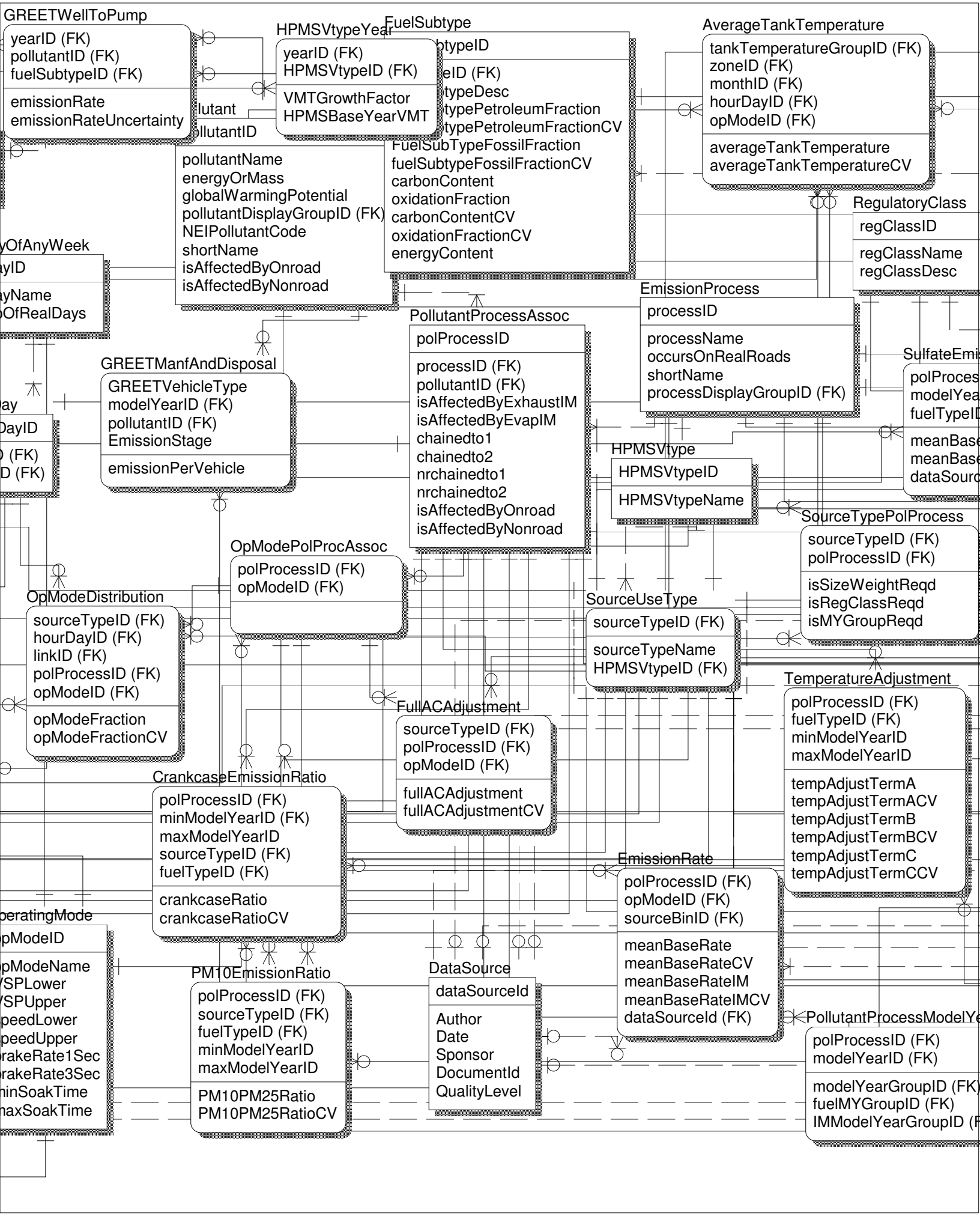
GREETWellToPump
yearID (FK)
pollutantID (FK)
fuelSubtypeID (FK)
emissionRate
emissionRateUncertainty
HPMSVtypeYear
yearID (FK)
HPMSVtypeID (FK)
VMTGrowthFactor
HPMSBaseYearVMT
FuelSubtype
AverageTankTemperature
tankTemperatureGroupID (FK)
zoneID (FK)
monthID (FK)
hourDayID (FK)
opModeID (FK)
averageTankTemperature
averageTankTemperatureCV
pollutantName
energyOrMass
globalWarmingPotential
pollutantDisplayGroupID (FK)
NEIPollutantCode
shortName
isAffectedByOnroad
isAffectedByNonroad
FuelSubTypeFossilFraction
fuelSubtypeFossilFractionCV
carbonContent
oxidationFraction
carbonContentCV
oxidationFractionCV
energyContent
RegulatoryClass
regClassID
regClassName
regClassDesc
EmissionProcess
processID
processName
occursOnRealRoads
shortName
processDisplayGroupID (FK)
PollutantProcessAssoc
polProcessID
processID (FK)
pollutantID (FK)
isAffectedByExhaustIM
isAffectedByEvapIM
chainedto1
chainedto2
nrchainedto1
nrchainedto2
isAffectedByOnroad
isAffectedByNonroad
GREETManfAndDisposal
GREETVehicleType
modelYearID (FK)
pollutantID (FK)
EmissionStage
emissionPerVehicle
HPMSVtype
HPMSVtypeID
HPMSVtypeName
SourceTypePolProcess
sourceTypeID (FK)
polProcessID (FK)
isSizeWeightReqd
isRegClassReqd
isMYGroupReqd
OpModePolProcAssoc
polProcessID (FK)
opModeID (FK)
OpModeDistribution
sourceTypeID (FK)
hourDayID (FK)
linkID (FK)
polProcessID (FK)
opModeID (FK)
opModeFraction
opModeFractionCV
SourceUseType
sourceTypeID (FK)
sourceTypeName
HPMSVtypeID (FK)
TemperatureAdjustment
polProcessID (FK)
fuelTypeID (FK)
minModelYearID
maxModelYearID
tempAdjustTermA
tempAdjustTermACV
tempAdjustTermB
tempAdjustTermBCV
tempAdjustTermC
tempAdjustTermCCV
FullACAdjustment
sourceTypeID (FK)
polProcessID (FK)
opModeID (FK)
fullACAdjustment
fullACAdjustmentCV
CrankcaseEmissionRatio
polProcessID (FK)
minModelYearID (FK)
maxModelYearID
sourceTypeID (FK)
fuelTypeID (FK)
crankcaseRatio
crankcaseRatioCV
EmissionRate
polProcessID (FK)
opModeID (FK)
sourceBinID (FK)
meanBaseRate
meanBaseRateCV
meanBaseRateIM
meanBaseRateIMCV
dataSourceId (FK)
PM10EmissionRatio
polProcessID (FK)
sourceTypeID (FK)
fuelTypeID (FK)
minModelYearID
maxModelYearID
PM10PM25Ratio
PM10PM25RatioCV
DataSource
dataSourceId
Author
Date
Sponsor
DocumentId
QualityLevel
PollutantProcessModelYe
polProcessID (FK)
modelYearID (FK)
modelYearGroupID (FK)
fuelMYGroupID (FK)
IMModelYearGroupID (F

MOVES Database Design

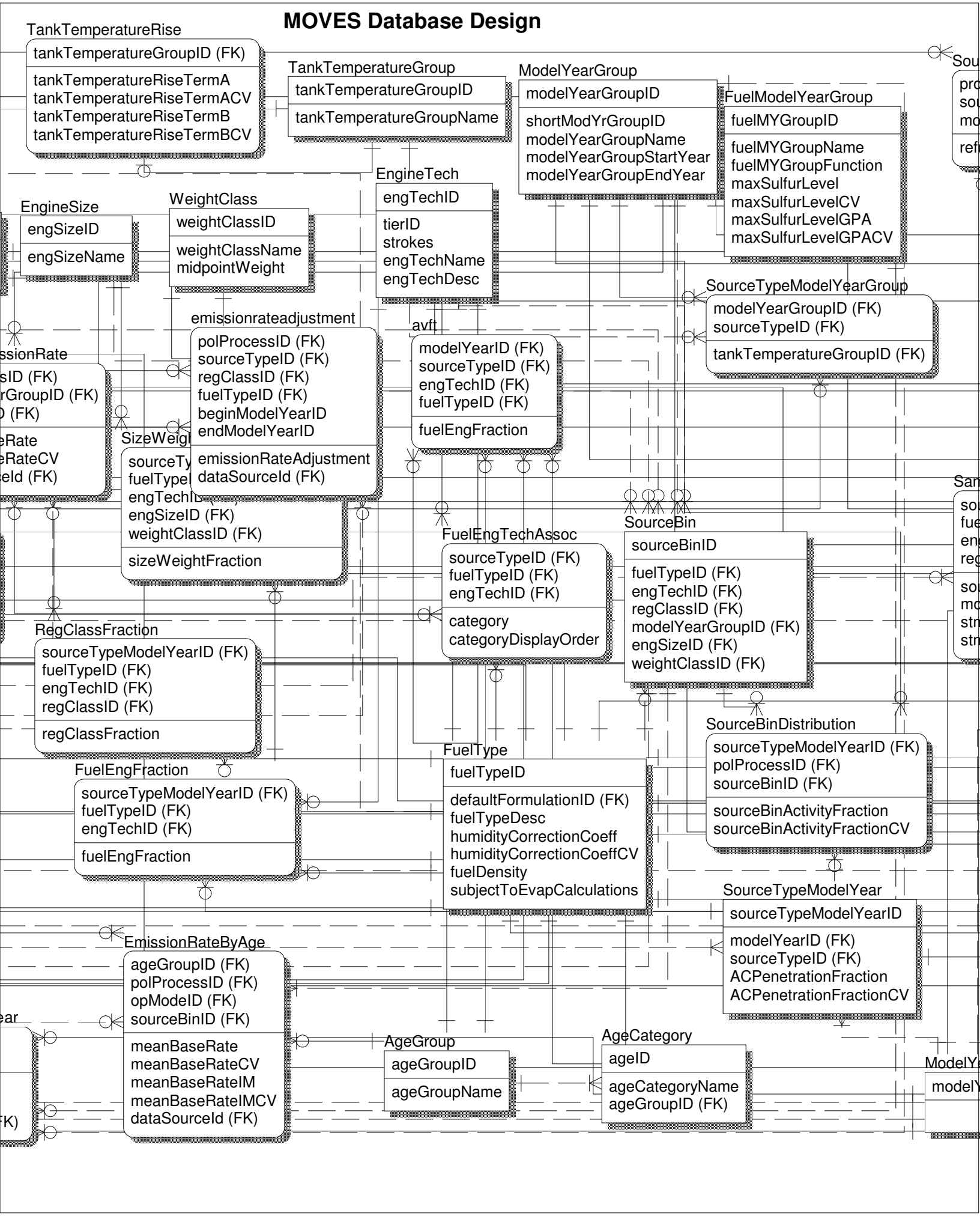

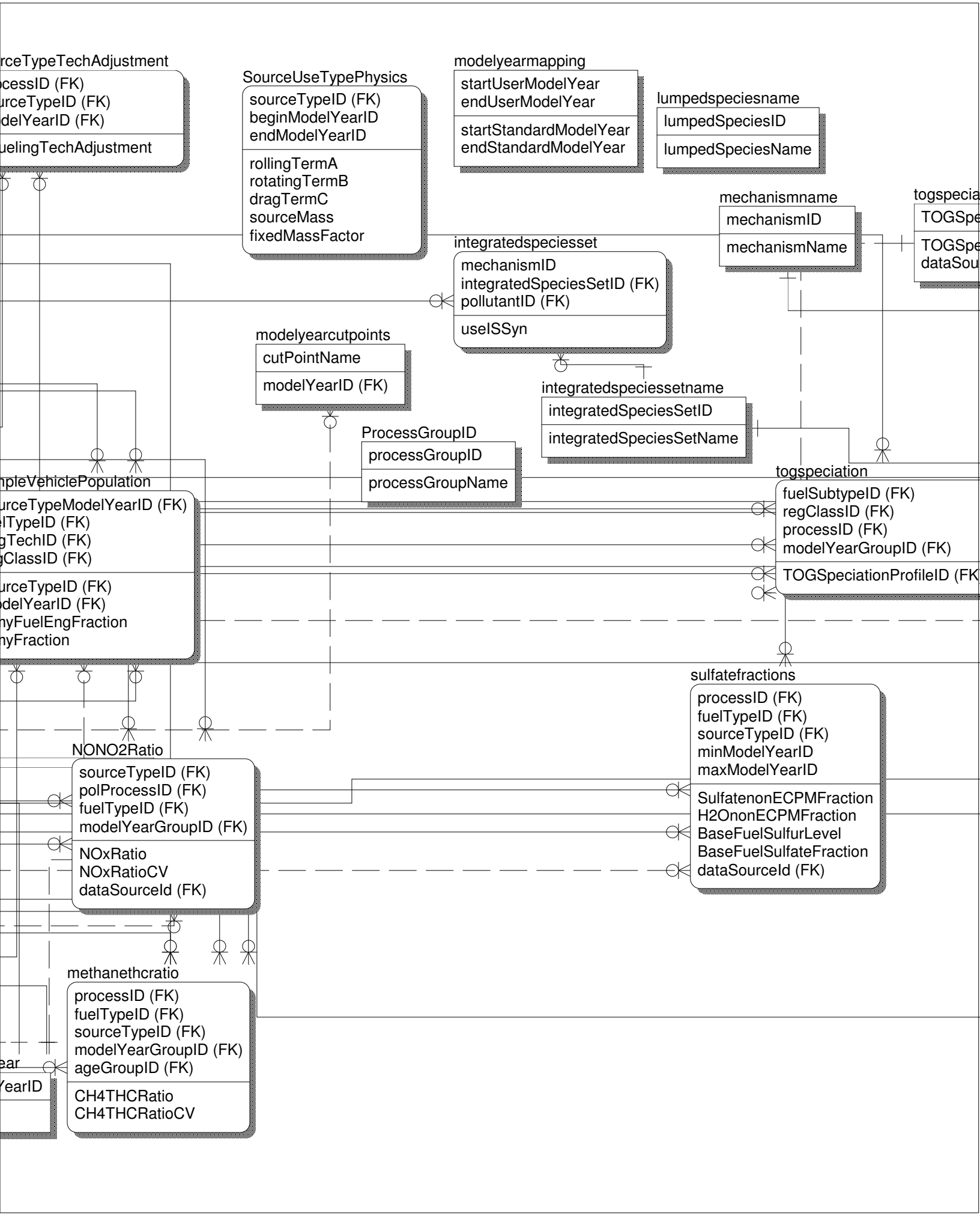
rceTypeTechAdjustment
cessID (FK)
urceTypeID (FK)
delYearID (FK)
uelingTechAdjustment
SourceUseTypePhysics
sourceTypeID (FK)
beginModelYearID
endModelYearID
rollingTermA
rotatingTermB
dragTermC
sourceMass
fixedMassFactor
modelyearmapping
startUserModelYear
endUserModelYear
startStandardModelYear
endStandardModelYear
lumpedspeciesname
lumpedSpeciesID
lumpedSpeciesName
mechanismname
mechanismID
mechanismName
togspecia
TOGSpe
TOGSpe
dataSou
integratedspeciesset
mechanismID
integratedSpeciesSetID (FK)
pollutantID (FK)
useISSyn
modelyearcutpoints
cutPointName
modelYearID (FK)
integratedspeciessetname
integratedSpeciesSetID
integratedSpeciesSetName
ProcessGroupID
processGroupID
processGroupName
mpleVehiclePopulation
urceTypeModelYearID (FK)
lTypeID (FK)
gTechID (FK)
gClassID (FK)
urceTypeID (FK)
delYearID (FK)
hyFuelEngFraction
hyFraction
togspeciation
fuelSubtypeID (FK)
regClassID (FK)
processID (FK)
modelYearGroupID (FK)
TOGSpeciationProfileID (FK
sulfatefractions
processID (FK)
fuelTypeID (FK)
sourceTypeID (FK)
minModelYearID
maxModelYearID
SulfatenonECPMFraction
H2OnonECPMFraction
BaseFuelSulfurLevel
BaseFuelSulfateFraction
dataSourceId (FK)
NONO2Ratio
sourceTypeID (FK)
polProcessID (FK)
fuelTypeID (FK)
modelYearGroupID (FK)
NOxRatio
NOxRatioCV
dataSourceId (FK)
methanethcratio
processID (FK)
fuelTypeID (FK)
sourceTypeID (FK)
modelYearGroupID (FK)
ageGroupID (FK)
CH4THCRatio
CH4THCRatioCV
ear
YearID

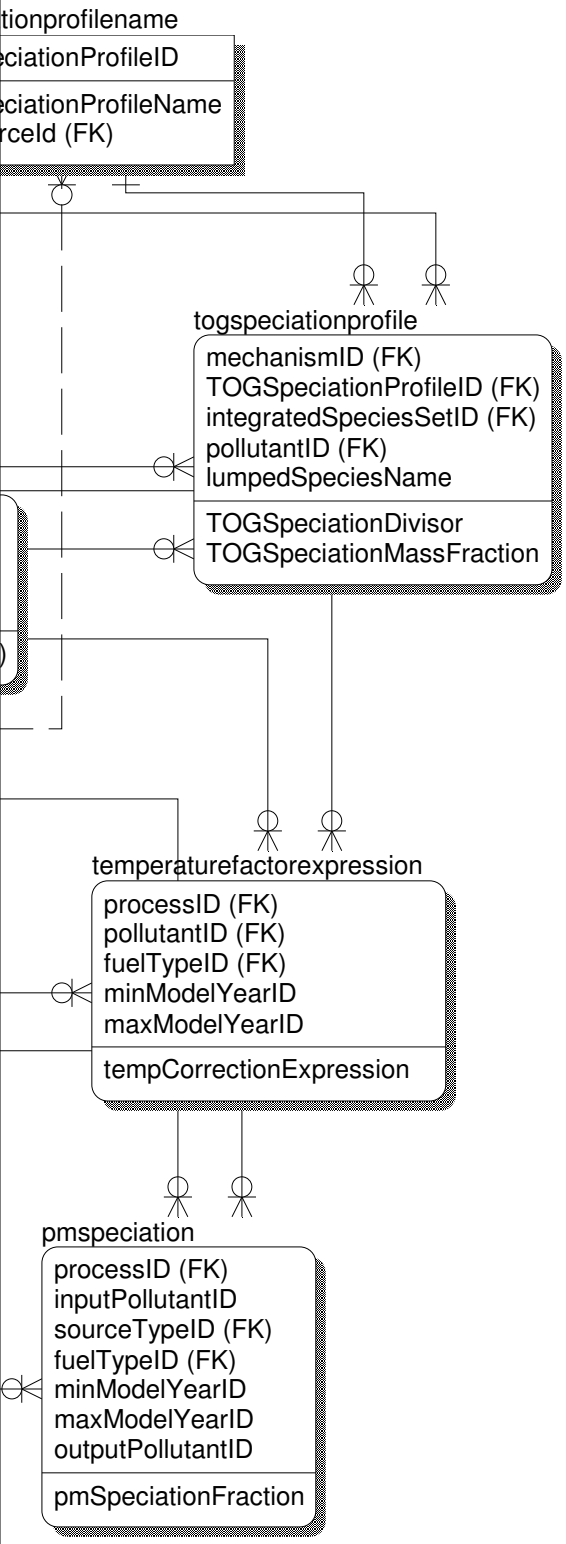
tionprofilename
eciationProfileID
eciationProfileName
rceId (FK)
togspeciationprofile
mechanismID (FK)
TOGSpeciationProfileID (FK)
integratedSpeciesSetID (FK)
pollutantID (FK)
lumpedSpeciesName
TOGSpeciationDivisor
TOGSpeciationMassFraction
temperaturefactorexpression
processID (FK)
pollutantID (FK)
fuelTypeID (FK)
minModelYearID
maxModelYearID
tempCorrectionExpression
pmspeciation
processID (FK)
inputPollutantID
sourceTypeID (FK)
fuelTypeID (FK)
minModelYearID
maxModelYearID
outputPollutantID
pmSpeciationFraction