Note: This is a reference cited in *AP 42, Compilation of Air Pollutant Emission Factors, Volume I Stationary Point and Area Sources.* AP42 is located on the EPA web site at www.epa.gov/ttn/chief/ap42/

The file name refers to the reference number, the AP42 chapter and section. The file name "ref02_c01s02.pdf" would mean the reference is from AP42 chapter 1 section 2. The reference may be from a previous version of the section and no longer cited. The primary source should always be checked.

AP-42 Section Number: 9.3.1

Reference Number: 1

Title: Source Assessment: Defoliation of Cotton- State of the Art

Peters, J. A. and T. R. Blackwood,
EPA-600/2-77-107g

US EPA

July 1977

EPA-600/2-77-107g
July 1977

Environmental Protection Technology Series

EPA LIBRARY

SOURCE ASSESSMENT: DEFOLIATION OF COTTON
State of the Art

Environmental Protection Agency
SEP 26 1977
Library Services Branch

Industrial Environmental Research Laboratory
Office of Research and Development
U.S. Environmental Protection Agency
Research Triangle Park, North Carolina 27711

RESEARCH REPORTING SERIES

Research reports of the Office of Research and Development, U.S. Environmental Protection Agency, have been grouped into five series. These five broad categories were established to facilitate further development and application of environmental technology. Elimination of traditional grouping was consciously planned to foster technology transfer and a maximum interface in related fields. The five series are:

1. Environmental Health Effects Research
2. Environmental Protection Technology
3. Ecological Research
4. Environmental Monitoring
5. Socioeconomic Environmental Studies

This report has been assigned to the ENVIRONMENTAL PROTECTION TECHNOLOGY series. This series describes research performed to develop and demonstrate instrumentation, equipment, and methodology to repair or prevent environmental degradation from point and non-point sources of pollution. This work provides the new or improved technology required for the control and treatment of pollution sources to meet environmental quality standards.

EPA REVIEW NOTICE

This report has been reviewed by the U.S. Environmental Protection Agency, and approved for publication. Approval does not signify that the contents necessarily reflect the views and policy of the Agency, nor does mention of trade names or commercial products constitute endorsement or recommendation for use.

This document is available to the public through the National Technical Information Service, Springfield, Virginia 22161.

EPA-600/2-77-107g
July 1977

SOURCE ASSESSMENT: DEFOLIATION OF COTTON State of the Art

by

J. A. Peters and T. R. Blackwood

Monsanto Research Corporation
1515 Nicholas Road
Dayton, Ohio 45407

Contract No. 68-02-1874
ROAP No. 21AXM-071
Program Element No. 1AB015

EPA Task Officer: David K. Oestreich

Industrial Environmental Research Laboratory
Office of Energy, Minerals, and Industry
Research Triangle Park, NC 27711

Prepared for

U.S. ENVIRONMENTAL PROTECTION AGENCY
Office of Research and Development
Washington, DC 20460

EPA-600/2-77-107g
July 1977

SOURCE ASSESSMENT: DEFOLIATION OF COTTON
State of the Art

by

J. A. Peters and T. R. Blackwood

Monsanto Research Corporation
1515 Nicholas Road
Dayton, Ohio 45407

Contract No. 68-02-1874
ROAP No. 21AXM-071
Program Element No. 1AB015

EPA Task Officer: David K. Oestreich

Industrial Environmental Research Laboratory
Office of Energy, Minerals, and Industry
Research Triangle Park, NC 27711

Prepared for

U.S. ENVIRONMENTAL PROTECTION AGENCY
Office of Research and Development
Washington, DC 20460

PREFACE

The Industrial Environmental Research Laboratory (IERL) of EPA has the responsibility for insuring that pollution control technology is available for stationary sources to meet the requirements of the Clean Air Act, the Federal Water Pollution Control Act and solid waste legislation. If control technology is unavailable, inadequate, uneconomical or socially unacceptable, then financial support is provided for the development of the needed control techniques for industrial and extractive process industries. The Chemical Processes Branch of the Industrial Processes Division of IERL has the responsibility for investing tax dollars in programs to develop control technology for a large number (>500) of operations in the chemical industries.

Monsanto Research Corporation (MRC) has contracted with EPA to investigate the environmental impact of various industries which represent sources of pollution in accordance with EPA's responsibility as outlined above. Dr. Robert C. Binning serves as MRC Program Manager in this overall program entitled, "Source Assessment," which includes the investigation of sources in each of four categories: combustion, organic materials, inorganic materials, and open sources. Dr. Dale A. Denny of the Industrial Processes Division at Research Triangle Park serves as EPA Project Officer. Reports prepared in the Source Assessment Program are of two types: Source Assessment Documents and State-of-the-Art reports.

Source Assessment Documents contain data on emissions from specific industries. Such data are gathered from the literature, government agencies and cooperating companies. Sampling and analysis are also performed by the contractor when the available information does not adequately characterize the source emissions. These documents contain all of the information necessary for IERL to decide whether a need exists to develop additional control technology for specific industries.

State-of-the-Art Reports include data on emissions from specific industries which are also gathered from the literature, government agencies and cooperating companies. However, no extensive sampling is conducted by the contractor for such industries. Sources in this category are considered by EPA to be of insufficient priority to warrant complete assessment for control technology decision making. Therefore, results from such studies are published as State-of-the-Art Reports for potential utility by the government, industry, and others having specific needs and interests.

This study was undertaken to provide information on air emissions from the defoliation of cotton. In this project, Mr. D. K. Oestreich served as EPA Project Leader.

CONTENTS

Section		Page
Preface		iii
Figures		vii
Tables		viii
Symbols		x
I	Introduction	1
II	Summary	3
III	Source Description	7
	A. Characteristics of Cotton Defoliation and Desiccation	7
	B. Process Description	9
	1. Ground Machinery	9
	2. Aircraft	10
	3. Nozzles	11
	C. Factors Affecting Emissions	13
	1. Spray Fluid Properties	15
	2. Nozzles	18
	3. Type and Operation of Equipment	20
	4. Meteorological Conditions	23
	D. Geographical Distribution	31
IV	Emissions	35
	A. Selected Pollutants	35
	1. Folex and DEF	38
	2. Sodium Chlorate	38
	3. Arsenic Acid	39
	4. Paraquat	40
	B. Emission Factors	41
	C. Definition of Representative Sources	43
	D. Source Severity	46
	1. Definition	46
	2. Ground Level Concentration	46
	3. Population Exposed	47
	4. Total Air Emissions	48

CONTENTS (continued)

Section		Page
V	Control Technology	63
	A. State of the Art	63
	1. Fluid Additives	64
	2. Nozzles and Atomizers	67
	3. Equipment Modification	68
	4. Meteorological Timing	69
	B. Future Considerations	70
	1. Foam Spray Systems	70
	2. Microfoil®	73
	3. Thermal Defoliation	75
VI	Growth and Nature of the Industry	78
	A. Present and Emerging Technology	78
	B. Industry Production Trends	81
VII	Appendixes	84
	A. Derivation of Source Severity and Input Data	85
	B. Preliminary Air Sampling of Cotton Desiccation	95
	C. Method for Estimating TLV Values for Compounds when None Exists	105
VIII	Glossary of Terms	109
IX	Conversion Factors and Metric Prefixes	112
X	References	114

FIGURES

Figure		Page
1	Hydraulic Pressure Nozzles	12
2	Drop Spectra for Four Nozzle Orientations	21
3	Cotton Harvested, 1969	32
4	Acreage Treated with Chemicals for Defoliation or for Growth Control of Crops or Thinning of Fruit, 1969	33
5	Component Parts of Foam Generators which Mix Air and Liquid to Form Foam	72
6	Representation of the Microfoil	75
7	Schematic of 1970 Thermal Defoliator	76
8	U.S. Cotton Acreage, Yield, and Production	82
A-1	Representative Field for Agricultural Spraying	89
B-1	Terminal Velocities of Spherical Particles of Different Densities Settling in Air and Water at 21°C under the Action of Gravity	104

TABLES

Table		Page
1	Severity Factors and Population Exposed to Pollutant for which $S_A \geq 0.1$	6
2	Horizontal Transport of Droplets in Light Winds	16
3	Effect of Spray Pressure on Droplet Size	18
4	Droplet Size Comparison of Four Nozzle Types	19
5	Terminal Velocities of Particles in Air and Number of Drops/Area	26
6	Time and Vertical Fall Distance for Pure Water to Evaporate from D_0 to D_f at 25°C, 101.3 kPa	31
7	Cotton Acreage Harvested, Percent of U.S. Total	34
8	Defoliants and Desiccants Used for Cotton	36
9	Formulation and Dilution of Major Harvest-Aid Chemicals	37
10	Calculated Emission Factors from Published Data for Drift from Agricultural Spraying	42
11	Calculated Emission Factors from Preliminary Field Sampling of Arsenic Acid Application to Cotton	44
12	Emission Factors for Defoliation or Desiccation of Cotton	45
13	Source Severity, Area, and Population Exposed to Pollutants for Which $\bar{\chi}/F_A \geq 0.1$	48
14a	Cotton Acreage Harvested and Defoliated, 1971 (Metric units)	50
14b	Cotton Acreage Harvested and Defoliated, 1971 (English units)	51
15	Quantities of Defoliants and Desiccants (Active Ingredients) Used on Crops and Acreage of Crops Treated, by Region, 1971	52
16	Cotton Acreage Harvested and Defoliated in Texas, 1971	55
17	Agricultural Use of Defoliants and Desiccants in Arizona, 1971	60

TABLES (continued)

Table		Page
18	Emission Estimates for Cotton Defoliants and Desiccants by State and Nationwide, 1971	61
19	Typical Drop Size Distribution, Cumulative Percent by Volume Below Sizes Shown	74
20	U.S. Cotton Acreage, Yield, and Production, 1947-73	82
21	Changes in Use of Harvest-Aid Chemicals for Cotton	83
B-1	Arsenic Acid Spraying Data	99
B-2	Emission Rate Calculation Data	101
C-1	Agricultural Chemicals with Published TLV's	106

SYMBOLS

Symbol	Definition
a	Constant
B	Length of side of square field
B'	Intercept
b	Exponent
C_V	Effective transfer coefficient at instantaneous fall velocity, V
D	Distance from center of representative field to perimeter
d	Drop diameter
D_f	Final diameter
D_L	Dosage or concentration from line puff (i.e., due to instantaneous line source)
D_o	Initial diameter
e	2.72
F	Hazard factor defined as the primary ambient air quality standard for criteria pollutants or a "corrected" threshold limit value for noncriteria pollutants (i.e., F = TLV • 8/24 • 1/100 for noncriteria pollutants)
F_A	Time-adjusted exposure factor related to threshold limit value and including a safety factor for general population exposure (i.e., F_A = TLV • 1/100)
h	Effective emission height
K	Diffusivity of water vapor in air at ambient temperature
LD_{50}	Acute oral dose for male rat
M	Slope
N	Number of drops of specific diameter, d

SYMBOLS (continued)

Symbol	Definition
n	Number of spray passes or swaths made in representative field
n'	Sample size (i.e., number of samples)
nmd	Mean based on number and mass of drops
P	Partial pressure of air
ΔP	Vapor pressure gradient between surrounding air and droplet surface
Q	Emission rate
Q_L	Total amount of material emitted per length from a line source
R^2	Coefficient of correlation
S_A	Source severity of emissions resulting from agricultural field spraying
S_B	Standard error of B'
S_M	Standard error of M
S_{YX}	Standard error of estimate
t	Time to complete spraying a representative field including the time needed for turning the spray equipment
T	Time to spray one pass
TLV	Threshold limit value
u	Mean wind speed
vmd	Mean based on volume (mass) median diameter
V_t	Terminal velocity
X,x	Arbitrary independent variable
x	Distance from source
x_i	i^{th} independent variable
x_1	Time of exposure

SYMBOLS (continued)

Symbol	Definition
x_2	Temperature
Y,y	Arbitrary dependent variable
$Z_{\alpha/2}$	The $\alpha/2$ percentage point of standard normal distribution
z_o	Roughness length; height at which air velocity near boundard layer reaches zero
α	1.0 minus the confidence level
π	3.14
σ_{xI}	Standard deviation of the distribution of pollutant material in the x direction in a puff
σ_{zI}	Standard deviation of the distribution of pollutant material in the z (vertical) direction in a puff
χ	Ground level concentration of pollutant emitted by a continuous elevated point source
$\bar{\chi}$	Time-averaged ground level concentration of pollutant at downwind perimeter of representative field undergoing spraying for defoliation or dessication
Q	Emission rate
$\bar{\chi}_{max}$	Time-averaged maximum ground level concentration of a pollutant emitted from a continuous nearpoint source
χ_{max}	Maximum ground level concentration of pollutant emitted by a continuous elevated point source

SECTION I

INTRODUCTION

Defoliation of cotton encompasses both defoliation and desiccation as chemical harvest-aid practices which are used to prepare the cotton crop for mechanical harvesting machines. Because harvest-aid chemicals are sprayed as fine droplets on the cotton, this practice constitutes a source of air pollution in the form of fugitive aerosols. The objective of this work was to assess the environmental impact of defoliation of cotton and to produce a reliable and timely Source Assessment Document for use by the EPA in deciding on the need for the development of additional control technology.

This document summarizes information relating to the emissions from defoliation of cotton. The areas studied were: (1) characteristics of emissions and factors affecting emissions; (2) source sites; (3) state and nationwide mass emissions; (4) effects of emissions on air quality and hazard potential to local population; (5) current and future considerations in pollution control technology; and (6) projected growth and anticipated technological development of the industry.

Emission factors were developed by preliminary field sampling of one of the major harvest-aid chemicals (arsenic acid) during application by a method that is characteristic of the industry (ground rig application). Emission factors for the major chemicals and application methods were assumed, based

on analogy to data found in the literature. These emission factors were used to compile the estimated effects on air quality. More complete and reliable data could be obtained by further sampling and analysis of the following agricultural practices: (1) aerial tributylphosphorotrithioate (DEF) application; (2) aerial sodium chlorate application; and (3) aerial paraquat application.

SECTION II

SUMMARY

Cotton is defoliated or desiccated prior to harvest wherever it is grown in the U.S. Defoliation is defined as the process by which leaves are abscissed from the plant by the action of topically applied chemical agents. Desiccation by chemicals is the drying or rapid killing of the leaf blades and petioles with the leaves remaining in a withered state on the plant. Defoliants are used on the taller varieties of cotton which are machine picked for lint and seed cotton, while desiccants usually are used on short, stormproof cotton varieties of lower yield that are harvested by mechanical stripper equipment.

The major cotton producing regions are located in the Mississippi River Valley extending from the top of Louisiana to the bootheel of Missouri, the Blacklands region of Texas, and the High and Low Rolling Plains regions of Texas. The top three cotton producing states in 1972, which together contributed over 60% of the harvested acreage, were Texas (39.4%), Mississippi (12.3%), and Arkansas (10.7%). A total of 16 states were considered in this study out of a possible 18. The two excluded states comprised less than 0.5% of annual harvested acreage.

Currently, almost 50% of total cotton acreage harvested is pretreated with defoliants or desiccants, ranging from a low

of 3% of New Mexico's acreage to a high of 85% of California's acreage.

Cotton defoliants and desiccants are applied as water-based sprays either by aircraft or by a ground machine. In both cases, nozzles situated on a boom break up the liquid formulations into spray droplets. The likelihood of spray droplets drifting into the atmosphere from their point of emission is primarily a function of the droplet diameters; in order to be emitted to the atmosphere rather than being deposited on target, the critical diameter of droplets has been proposed to be of the order of 100 μm. The small droplets drift.

The major defoliant chemicals used are sodium chlorate, tributylphosphorotrithioite (Folex), and tributylphosphorotrithioate (DEF). The major desiccants are arsenic acid and paraquat. The U.S. emissions of cotton defoliants in 1971 were 22.9 metric tons (25.2 tons) of DEF and Folex, and 33.0 metric tons (36.3 tons) of sodium chlorate. Total emissions of cotton desiccants were 16.8 metric tons (18.5 tons) of arsenic acid, and 1.39 metric tons (1.53 tons) of paraquat. (All emission rates were based on estimated usage figures and on some assumed emission factors.)

SEASON These emissions occur from July to October, preceding by two weeks the period of harvest in each cotton producing region. The emission factors for each major harvest-aid chemical are assumed to be 10 g/kg (20 lb/ton) for sodium chlorate, DEF, Folex, and paraquat, and 6.1 ± 2.9 g/kg (12.2 ± 5.7 lb/ton) at the 95% confidence level for arsenic acid.

The source severity, S_A, was defined to indicate the hazard potential of a representative emission source for the special case of agricultural field spraying:

$$S_A = \frac{\bar{\chi}}{F_A} \qquad (1)$$

where $\bar{\chi}$ is the time-averaged ground level concentration of the chemical emitted at the downwind perimeter of a representative field undergoing spraying for defoliation or desiccation, and F_A is a time-adjusted exposure factor related to threshold limit value (TLV®) and also includes a safety factor for general population exposure.

Four representative sources of harvest-aid chemical spray application were defined. For sodium chlorate, the representative source was a 0.70-km^2 (173-acre) cotton farm located in the Mississippi River Valley with an aerial application rate of 0.56 g/m^2 (5.0 lb/acre). The representative source for DEF application was defined as a 0.70-km^2 cotton farm located in the Mississippi River Valley with an aerial application rate of 0.17 g/m^2 (1.5 lb/acre). The arsenic acid representative source consisted of a 0.61-km^2 (150-acre) cotton farm located in the Blacklands of Texas with a ground machine application rate of 0.49 g/m^2 (4.4 lb/acre). The representative source for paraquat application was defined as a 1.05-km^2 (260-acre) cotton farm located in the High Plains of Texas with an aerial application rate of 0.056 g/m^2 (0.5 lb/acre).

The calculated source severity factors for the representative sources of each of the major harvest-aid chemicals are given in Table 1, accompanied by the affected population to a severity of 0.1 or greater.

Control technology for aerial application of pesticides has been implemented in the practice of techniques that are effective in reducing chemical drift. Fluid additives that increase the viscosity of the spray formulation and thus

CONTROL

Table 1. SEVERITY FACTORS AND POPULATION EXPOSED TO POLLUTANTS FOR WHICH $S_A \geq 0.1$

Pollutant	Representative source severity	Exposed population, persons
Arsenic acid	0.69 ± 0.32	6,134
Paraquat	0.30	322
Sodium chlorate	0.44	754
DEF	0.67	2,517

decrease the number of fine (<100 μm) droplets have been used. Nozzle design and orientation control the droplet size spectrum. Future control technology considerations include the use of foam spray systems to reduce overlapping, multiple hypodermic needle nozzle systems, and the replacement of chemical defoliation with thermal defoliation.

The cotton industry has been growing (7.5% per year) since 1967 when acreage harvested hit a modern day low point. However, the growth trend is leveling off, and 1978 cotton acreage is anticipated to be no more than that of 1972 due to strong competition from foreign producers and from synthetics. The growth factor for the industry (1978 emissions/1972 emissions) is 1.

SECTION III

SOURCE DESCRIPTION

A. CHARACTERISTICS OF COTTON DEFOLIATION AND DESICCATION

Artificial defoliation of cotton was first discovered by researchers at the Pee Dee Agricultural Experiment Station in South Carolina. In being applied to cotton as a side dressing, some calcium cyanamide fertilizer accidently drifted onto the cotton which was wet with dew, and it caused the leaves to drop off. At harvest time some of the fertilizer was purposely dusted on other cotton; it was defoliated, also. Although it had always been known that cotton sheds its leaves just after a frost, the Pee Dee discovery marked the beginning of artificial defoliation.

By 1945, the increasing labor shortage and high cost of conventional hand picking of cotton led to the introduction of mechanical harvesters. Although efficient, these machines collected bolls and foliage together, so that the lint was stained with the sap from damaged leaves. A chemical that would either destroy the leaves or cause premature leaf fall but maintain the bolls unharmed had an obvious economic value. Although in 1941 only a few fields of cotton were defoliated experimentally, now about half the cotton in the U.S. is sprayed with defoliants.[1]

---

[1]Osborne, D. J. Defoliation and Defoliants. Nature. 219:564-567, August 10, 1968.

Defoliation may be defined as the process by which leaves are abscised from the plant. The process may be initiated by drouth stress, low temperatures, or disease, or it may be chemically induced by topically applied agents or by over-fertilization. The chemicals used to initiate the process are termed defoliants. The practice of desiccating cotton plants with chemicals is often mistakenly called "defoliation."[2]

Desiccation, the drying or removal of moisture, is a term used to describe the effect of harvest-aid chemicals on cotton plants, which involves rapid killing of the leaf blades and petioles. The severe chemical injury also prevents the formation of an abscission layer, and the leaves do not detach from the stalks. The term "frozen" is commonly used to describe the leaf condition. When the blades of leaves are killed by chemical action with appreciable injury to the petioles, leaf abscission does occur. Under certain conditions, the dry leaf blades of frozen, dead leaves are removed from the petioles by wind-induced thrashing of the plant stem, giving the field a defoliated appearance.[2]

Defoliation is especially advantageous in machine harvesting and is used mostly where spindle picker harvesters are used. Defoliation helps lodged plants to return to an erect position; removes the leaves which can clog the spindles of the picking machine, add trash, and stain the fiber; accelerates the opening of mature bolls; and reduces boll

---

[2]Miller, C. S., E. D. Cook, J. L. Hubbard, J. S. Newman, E. L. Thaxton, and L. H. Wilkes. Cotton Desiccation Practices and Experimental Results in Texas. Texas Agricultural Experiment Station. College Station, Texas. Miscellaneous Publication No. MP-903. November 1968. 14 p.

rot. Defoliation reduces populations of insects which feed on leaves in late season; it has the immediate effect of eliminating fiber damage by the honeydew of aphids and white flies, and the more important long-range effect of greatly reducing the number of overwintering insects, such as the pink bollworm.[3]

Desiccants usually are used on stormproof or semistormproof cotton varieties that are small and low in growth. Cotton desiccation is standard practice in the high plains of Texas and Oklahoma, where yields are relatively low and production costs must be kept low. Most harvesting in these regions is done by mechanical "strippers" - a much less expensive method than spindle machine harvesting. At harvest time there is usually very little moisture in the cotton and it responds poorly to defoliants, green leaves often remaining on the plants; farmers therefore prefer to desiccate and have thoroughly dry leaves, since strippers remove leaves and burrs with the seed cotton.[3]

B. PROCESS DESCRIPTION

Harvest-aid chemicals are applied to cotton as water-based sprays either by aircraft or by a ground machine.

1. Ground Machinery

A complete sprayer unit is equipped with a power source (engine or power take-off), pump, pressure gauge, pressure regulator, tank, booms, pressure hoses, and nozzles. The sprayer unit may be self propelled, tractor mounted, or pull

---

[3]Addicott, F. T., and R. S. Lynch. Defoliation and Desiccation: Harvest-Aid Practices. In: Advances in Agronomy, Vol. 9. 1957. p. 69-93.

type. The pump, which is operated by the power source, pumps the chemical formulation from the tank through the pressure regulator, then through the hoses and boom and out through the nozzles. Typically, a sprayer pump will force about four times as much spray through the pressure regulator as is discharged through the nozzles. The excess spray is forced through a bypass line and discharged back into the sprayer tank. This agitates the spray mixture, keeping it well mixed.[4]

Three factors determine the amount of liquid a sprayer can apply. These are: (1) ground speed of the sprayer unit, typically from 1.3 m/s to 6.7 m/s (3 to 15 mph); (2) size and number of nozzles used, usually one to five nozzles per crop row; and (3) pressure at which the spray is applied, typically 140 kPa to 620 kPa (20 to 90 psi).

The most popular type of ground sprayer used on cotton is the High Clearance Tractor Sprayer, or Hi-Boy, a sprayer mounted on an elevated tractor with wheel shields for crop protection.

2. Aircraft

Sprayer units mounted on aircraft are comprised of the same elements as ground rig sprayers. Sprays are pumped out through a wing-length boom on which hydraulic atomizing nozzles are located. The power source for the pumps is either an additional small engine on board or, more typically, a centrifugal pump that is wind driven by a small propeller located beneath the aircraft. There are from 28 to 56 nozzles located on the boom, operating at 210 kPa

[4]Insecticidal Spraying of Field Crops With Ground Machinery. Texas Agricultural Extension Service. College Station, Texas. Bulletin No. L-486. August 1961.

to 410 kPa (30 to 60 psi). Airplanes spray at speeds of 36 m/s to 54 m/s (80 to 120 mph), while helicopters maintain speeds of about 9 m/s (20 mph). Swath widths of 10 m to 20 m are typical.

The release patterns from a fixed-wing plane and from a helicopter are similar. Chemicals are released downward, dispersed outward, drawn upward near the wing tip or rotor tip, rotated in this zone, and then settle to the ground. The vortex system -- the rotation at the wing tip or rotor tip -- is a basic function of both types of equipment. A strong central propeller wash that develops with fixed-wing aircraft has the undesirable effect of skewing the wake to one side of the aircraft's centerline. The helicopter pattern is generally better than the fixed-wing aircraft because this skewing is not a factor.[5]

3. Nozzles

Regardless of the rates and dosages used by aircraft and ground equipment, both types of operations use essentially the same techniques and devices for breaking up a liquid formulation into a spray. The most frequently used devices are the hydraulic pressure nozzles illustrated and identified in Figure 1 according to the type of droplet pattern that each produces:[6]

---

[5]Riley, J. A., and W. L. Giles. Agricultural Meteorology in Relation to the Use of Pesticides. Agricultural Meteorology. 2:225-245, 1965.

[6]Akesson, N. B., and W. E. Burgoyne. Spray Atomization, Application Volume and Coverage. Proceedings and Papers of the Thirty-Fifth Annual Conference of the California Mosquito Control Association, Inc., and the American Mosquito Control Association. February 1967. p. 139-144.

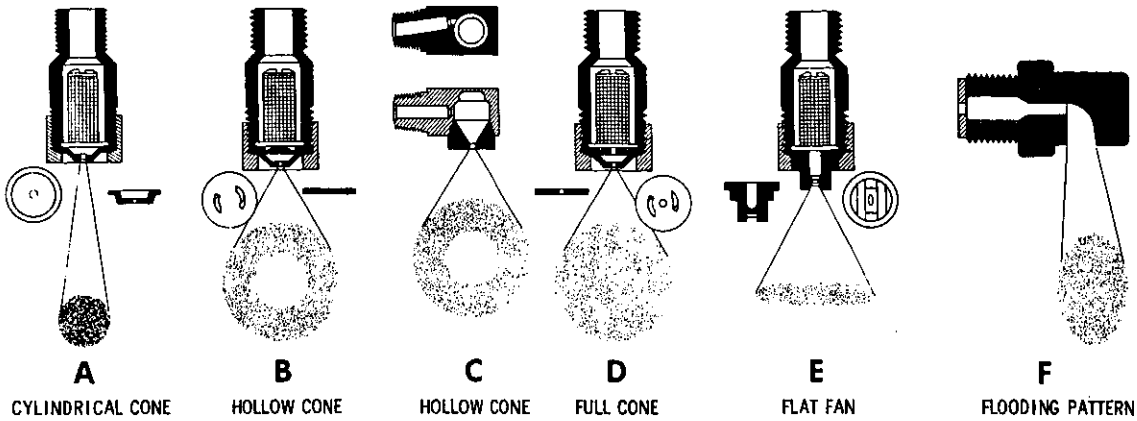

Figure 1. Hydraulic pressure nozzles[6]

A-cylindrical jet, formed by liquid ejected from a small circular orifice;

B-hollow cone, created by a small whirl plate ahead of the orifice which gives the spray a tangential spin, thus spreading and breaking up the liquid;

C-another form of the hollow cone in which the tangential spin is produced by an offset entrance to the whirl chamber (frequently described as "nonclog nozzles");

D-full, or solid cone produced because a small hole has been drilled in the center of the whirl plate to fill in the normal hollow cone;

E-flat fan, wherein proper milling of the orifice slot gives a long, narrow pattern; and

F-flooding pattern, formed by simple impaction of the liquid against a sloping plane.

Each of these designs has been used for pesticide applications and is adapted to a particular service primarily on the basis of the coarse or fine spray it produces. The hollow cone (B) and flat fan (E) are the most commonly used of the group. The greatest flexibility is available in the hollow cone where different combinations of whirl plate and disc orifice size can provide a wide range of spray particle sizes.[6]

C. FACTORS AFFECTING EMISSIONS

Contamination of the air from harvest-aid chemical application can come about in any of three ways: (1) aerosol spray suspended during application; (2) subsequent wind erosion of contaminated soil; or (3) vaporization of the chemical from the treated area. Wind erosion and vaporization are not treated in this assessment; however, primary chemical spray drift from a source or application site is investigated.

In analyzing treated plants and soil, researchers have long been plagued by the fact that they can usually account for only a fraction of the amount of a pesticide applied. It is not unusual to find only 50% or less of the applied material accounted for in the materials balance in the treated area immediately after application. Most of the missing part is dispersed in the air as fine sprays, or aerosols, and carried to adjacent areas.

There are three zones of spray drift contamination. The first, the target area where deposit takes place primarily by ballistic fallout, includes the actual aircraft or ground-rig swaths and the area about 70 meters downwind. The second zone is the drift fallout zone, extending from about 70 meters to over a kilometer downwind. This zone may receive some fallout, but within 300 meters most of the material is airborne (aerosol-size droplets under 50 μm),[7] and meteorological factors dominate the deposit of residues. The general environmental area is the third zone. It continues from a kilometer or so onward, and becomes the sink for material

---

[7]Yates, W. E., and N. B. Akesson. Reducing Pesticide Chemical Drift. In: Pesticide Formulations. Van Valkenburg, Wade, (ed.). New York, Marcel Dekker, Inc., 1973. p. 275-341.

transported in the atmosphere as very fine aerosol particles of less than 10 μm to 15 μm. These may be deposited by settling and impingement, but may also be carried aloft and not returned to earth except by washout from precipitation of some form.[7]

In the drift fallout zone, data have shown[8] that the amount of material still in the air is from 6 to 40 times that which falls on the ground. This would likely be true at further distances downwind; however, continued settling would be expected and spreading by air diffusion would rapidly reduce the air concentration. Other published data[9] from controlled pesticide aerosol wave release experiments revealed that the aerosol droplets that settle at distances of over 1 km from the point of aerosol generation did not exceed 5% for the large drops (>25 μm), but reached about 90% for aerosol smaller than 15 μm.

The likelihood of droplets drifting into the atmosphere from their point of emission is primarily a function of the droplet diameter or size. The critical diameter of droplets for agricultural spraying has been proposed to be of the order of 100 μm;[10,11] all droplets smaller than that are apt

---

[8]Akesson, N. B., and W. E. Yates. Problems Relating to Application of Agricultural Chemicals and Resulting Drift Residues. Annual Review of Entomology. 9:285-318, 1964.

[9]Kutsenogiy, K. P., V. I. Makarov, Y. F. Chankin, V. M. Sakharov, and G. N. Zagulyayev. Study of the Physicochemical Characteristics of Large Aerosol Waves. Institut Eksperimental'nye Meteorologiya. 27:97-104, 1972.

[10]Maybank, J., and K. Yoshida. Delineation of Herbicide Drift Hazards on the Canadian Prairies. Transactions of the American Society of Agricultural Engineers. 12:759-762, 1969.

[11]Courshee, R. J. Investigations on Spray Drift. II. The Occurrence of Drift. Journal of Agricultural Engineering Research. 4:229-241, 1959.

to drift away from the target area. To investigate this problem, it is necessary to specify and study the overall size spectrum produced by a typical sprayer.

Drop size and frequency distribution information may be presented in many ways. The simplest of these is the arithmetic mean, or $\Sigma Nd/\Sigma N$, where N is the number of drops having a diameter d. This gives an arithmetic average which tends to be weighted in favor of small drops. To weight the mean drop diameter on the basis of volume, another mean can be used, $(\Sigma Nd^3/\Sigma N)^{1/3}$. More expressive means, those based on number and mass of the drops, are termed number (nmd) and volume (mass) median diameters (vmd). These medians are defined as the values that divide the numbers or volumes of the spray into two equal parts, or the 50% cumulative point. The vmd is most commonly used and is often refered to as mass median diameter (constant density of droplets). Still another mean is used, particularly by fuel burner investigators, called the Sauter mean diameter. It is an expression of volume-to-surface relation, $\Sigma Nd^3/\Sigma Nd^2$.[8]

The many factors that influence the droplet size spectrum formed and the movement of droplets discharged from an aircraft or ground machine are discussed below. A rough idea of the drift pattern of various droplet sizes can be obtained from Table 2.

1. Spray Fluid Properties

Most agricultural spray nozzles produce a wide range of spray drop sizes. In addition, selection of the fluid properties can affect the drop size spectrum. The most important physical properties related to droplet size are the surface tension, viscosity, density, and vapor pressure.

Table 2. HORIZONTAL TRANSPORT OF DROPLETS IN LIGHT WINDS[8]

Drop diameter, μm	Drop type	Distance droplet would be carried by a 1.34 m/s (3 mph) wind while falling 3 m (10 ft), m
400	Coarse aircraft spray	2.59 (8.5 ft)
150	Medium aircraft spray	6.71 (22 ft)
100	Fine aircraft spray	14.63 (48 ft)
50	Air carrier spray	52.25 (178 ft)
20	Fine spray and dusts	338.3 (0.21 mi)
10	Usual dusts and aerosols	1,352 (0.84 mi)
2	Aerosols	33,800 (21 mi)

a. Surface Tension - The surface tension represents a direct force that resists the formation of a new surface area. The minimum energy required for atomization is equal to the surface tension multiplied by the increased liquid surface area. Thus, it may represent a predominant force for certain types of atomization. The surface tension commonly encountered in sprays ranges from 0.073 N/m (73 dynes/cm) for water to as low as 0.020 N/m (20 dynes/cm) for some petroleum distillates.

For most pure liquids the surface tension in contact with air decreases with an increase in temperature and is independent of the age of the surface. Since most agricultural sprays are mixtures of surfactants, carrier, and active ingredient, it must be noted that the surface tension of a newly formed surface is close to the value for the bulk of the liquid and with time reaches an equilibrium or static surface tension that is normally reported as "surface tension.[11]

The term "dynamic surface tension" is the value obtained before equilibrium and is related to the age of the surface. The dynamic surface tension for the age of the surface at the time of disintegration should be used for prediction of drop size. A decrease in the dynamic surface tension increases the number of droplets available for drift.

b. Viscosity - Viscosity is one of the most important liquid properties that can affect the drop size spectrum. An increase in viscosity physically dampens the natural wave formations. This generally delays disintegration and increases droplet size. The viscosity of most spray solutions is relatively low, ranging from 0.001 Pa-s (0.01 poise) for water to 0.01 Pa-s (0.1 poise) for some weed oils. The viscosity of simple (or Newtonian) liquids is independent of the shear rate and generally decreases with an increase in temperature. However, for a complex (or non-Newtonian) fluid, and most spray formulations are complex, the viscosity is a function of the shear rate. It is this particular parameter to which many developments in drift control are addressed (see Section V).[7]

c. Density - The spray formulation density has little effect on the atomization due to the small range that is normally encountered in commercial spray formulations. The density can range from a low of 800 kg/m^3 (0.8 g/ml) for an oil carrier to 1200 kg/m^3 (1.2 g/ml) for some technical materials, but the bulk of agricultural formulations use water, with a density of 1000 kg/m^3 (1.0 g/ml).[7]

d. Vapor Pressure - For most agricultural spray systems the vapor pressure has no effect on the initial droplet size spectrum.[7] However, the vapor pressure gradient between the surrounding air and the drop surface has a direct effect upon the rate of evaporation which consequently determines

the size of a given drop with respect to time. The effect of evaporation is discussed later in this section (III.C.4.d).

2. Nozzles

One of the most important means for controlling droplet size is through selection of the type, design, operating pressure, and orientation of the atomizer or nozzle.

a. Spray Pressure - Spray pressure controls the speed at which the ejected liquid moves through the air. An increase in pressure increases the speed and forms larger numbers of small drops. Typical effects are shown in Table 3. Several factors including spray pressure affect the momentum of the airstream which accompanies the spray and tends to carry it to the ground.[11]

Table 3. EFFECT OF SPRAY PRESSURE ON DROPLET SIZE[11]

Spray pressure, kPa (psi)	Percentage of spray volume that is <100 μm	
	Nozzle A[a]	Nozzle B[b]
68.9 (10)	3	1
110.3 (16)	6	3
420.6 (61)	18	18

[a]Nozzle A is a swirl nozzle with swirl ports cut into the plate containing the orifice.

[b]Nozzle B is a flat fan nozzle molded from a ceramic material.

b. Type of Nozzle - The type of nozzle or atomization system can affect the droplet spectrum when all other factors

are equal. Laboratory tests have shown[12] the differences in droplet size characteristics. Under controlled conditions, the percentage of spray volume in the driftable category, less than 100 μm diameter, is: cone ≃ flat > flooding > Raindrop® nozzle. Table 4 presents these laboratory test results.

Table 4. DROPLET SIZE COMPARISON OF FOUR NOZZLE TYPES[12]

Spray pattern	Pressure, kPa (psi)	Flow, kg/min (gal/min)	Volume median diameter, μm	% of Spray volume under 100 μm
Flooding	275.8 (40)	1.13 (0.30)	210	13.0
Flat	275.8 (40)	1.13 (0.30)	202	15.5
Cone	275.8 (40)	1.10 (0.29)	195	15.9
Raindrop (cone)	275.8 (40)	1.10 (0.29)	410	0.8

c. Orientation of Nozzle - Further changes in the atomization of sprays can be obtained by altering the discharge angle of the nozzle in relation to the spray machine's airstream. With ground machines, an increased wind speed deflects the spray more quickly and deflects larger drops, also. If the spray is aimed partly in the direction of the wind, instead of vertically, it becomes drift more readily. On the other hand, if the spray is projected cross-wind at an angle to the vertical it is not inclined with the wind, but it takes longer to reach the ground; the wind then has more time to act upon it and deflect it. The end effect is similar -- it is more likely to become drift than a similar drop aimed downward in the vertical direction.[11] Preliminary field

[12]Ware, G. W., W. P. Cahill, and B. J. Estesen. Pesticide Drift: Aerial Applications Comparing Conventional Flooding vs. Raindrop® Nozzles. Journal of Economic Entomology. 68(3):329-330, 1974.

sampling has shown that nozzles directed upward emit three times as much spray drift as nozzles directed downward (see Appendix B).

An aircraft atomization system is more complex than that of a ground machine, involving, first, the hydraulic ejection of the liquid under pressure through an orifice and, secondly, the effect of the slipstream's air velocity, which has a specific relation to the final atomization.[8] Laboratory tests have been conducted[13] to determine the effects of orienting the nozzle in four positions relative to the airstream: into the airstream, vertically downward, horizontal with the flow, and at an angle of 0.785 rad(45°) to the airstream. The effects of these orientations on the drop size spectrum, shown in Figure 2, indicate that orientation horizontally with the flow gives the largest drops. The State of California requires jet nozzles to be directed back or with the slipstream for aerial application of injurious herbicides in specified hazardous areas.[7]

3. Type and Operation of Equipment

The type of application equipment (aircraft or ground machine) and the way in which it is operated can affect both the droplet size spectrum produced and the amount of spray available for drift.

a. Aircraft vs. Ground Machine - The emphasis in drift control work has been on the aircraft applicator rather than the ground rig because the principal problem areas have been more frequently associated with large-scale pesticide

[13]Coutts, H. H., and W. E. Yates. Analysis of Spray Droplet Distributions from Agricultural Aircraft. Transactions of the American Society of Agricultural Engineers. 11(1):25-27, 1968.

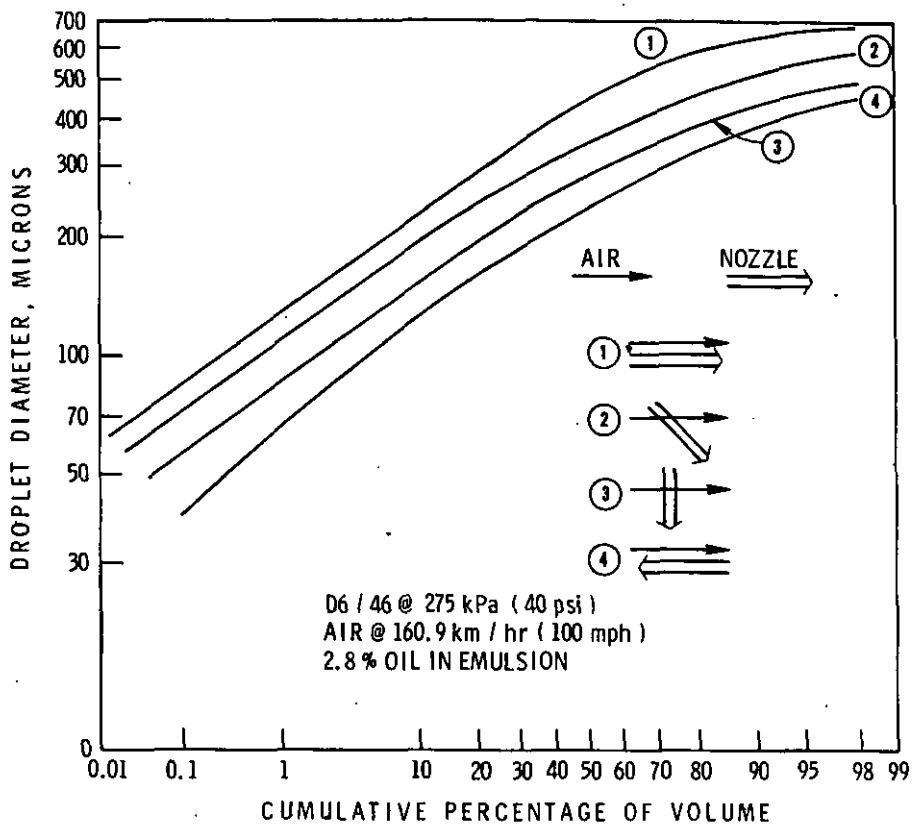

Figure 2. Drop spectra for four nozzle orientations[13]

Courtesy of H. H. Coutts, W. E. Yates and
the American Society of Agricultural Engineers.

operations involving aircraft. It has been demonstrated[14] that large ground sprayers, particularly those using air carrier means such as a mist blower, do produce a drift hazard equal to or greater than that produced by aircraft. However, greater control exists over a ground rig and its lower discharge rate has less drift potential than that of an aircraft.

Field research to compare the spray drifts from simultaneous applications by a high clearance, self-propelled ground sprayer and by a "standard" airplane sprayer showed that at

[14]Ware, G. W., E. J. Apple, W. P. Cahill, P. D. Gerhardt, and K. R. Frost. Pesticide Drift. II. Mist Blower vs. Aerial Application of Sprays. Journal of Economic Entomology. 62(4):844-846, August 1969.

all distances downwind the aerial application resulted in 4 to 5 times as much drift as the ground sprayer created for both evening and morning treatments.[15]

The major factor affecting increased drift emissions due to aerial application is the pattern of release into the air wake created by the wing in flight. This wake carries the material out toward the wing tips, then drops it in a swath of about wingspan width. The vortex patterns develop into two distinct vortices at each wing tip and a strong central propeller wash. This vortex system is common for both fixed-wing and helicopter equipment. Altering the wing tips with spoil plates or other devices does not stop the vortex from developing.[7] Also, at a forward speed above 6.7 m/s to 11.2 m/s (15 mph to 25 mph) the helicopter does not develop any greater downwash than does a fixed-wing aircraft; only when hovering does a helicopter develop a large downwash.

The wake that any aircraft develops is principally a function of the total weight of the craft and its load; the amount of drag is a function of wing design being affected by all external equipment such as spreaders, propeller pump drives, and booms. The lighter and aerodynamically "cleaner" the aircraft is, the less turbulence there will be in the wake. Field research has also shown that the high-shear turbulence on the aircraft wake has more effect on atomizing the liquid spray than has the viscosity in reducing this atomization.[8]

b. Height of Emission - The release height is an important element to be considered in confining spray to the target area. Although an increase in height is sometimes used to

---

[15]Ware, G. W., B. J. Estesen, W. P. Cahill, P. D. Gerhardt, and K. R. Frost. Pesticide Drift. II. Mist Blower vs. Aerial Application of Sprays. Journal of Economic Entomology. 62(4):840-843, August 1969.

increase the swath width by allowing the wind to carry the material downwind, conversely the elevation should be minimized to reduce the drift hazard. Applications of injurious herbicides in California must be released at an elevation lower than 3.05 m (10 ft) for aerial applications.[7]

For ground sprayers, the situation is similar in principle; the wind through the spray is that which results from the combination of wind over the ground and the travel speed of the tractor. It is this wind that determines whether or not the small drops are winnowed out of the spray.[11]

c. Number of Swaths - The cumulative effect of successive swaths in an area will affect the amount of material emitted to the atmosphere and deposited as downwind drift. An increase in the number of swaths from one to five increases the ground deposit and the airborne concentration at the downwind edge of the target area by about twice, but a further increase in the number of swaths to 40 results in only a slight further increase. At 100 m downwind the swaths are still not additive, the hazard from 40 swaths being only 8 to 10 times that of one; at 1,000 m the hazard from 40 swaths is about 30 times that of one swath, while it can be inferred that at 10,000 m the swaths would be nearly additive.[16]

4. Meteorological Conditions

The airborne drift of agricultural sprays is a direct result of the transport of the droplets by atmospheric movement. Some of the major meteorological parameters that affect

---

[16]Yeo, D., N. B. Akesson, and H. H. Coutts. Drift of Toxic Chemicals Released from a Low-Flying Aircraft. Nature. 183:131-132, January 10, 1959.

drift are: wind speed, air temperature, humidity, and turbulent mixing. The diffusion, transport, and deposition characteristics of the wide range of droplet sizes present are very complex, and the fundamental relationships for predicting drift concentrations are not fully established.

a. Gravitational Forces - The gravitational force on a droplet is one of the most significant factors on which attention must be focused in order to understand airborne drift. Drift studies begun in 1947 set a pattern that is followed today. The researcher stated the principle:[17] "Underlying all problems of field application of toxic materials is the rate of settling of particles suspended in the air."

The movement of a particle in air is a function of the resultant of the gravitational and aerodynamic drag forces. The gravitational force acts straight downward and is simply the volume of the particle multiplied by the difference between particle density and air density. The aerodynamic force on a rigid particle is related to the particle's air velocity, to its size and shape, and to the density and viscosity of the air. In addition, for liquid particles the surface tension and viscosity of the liquid may also affect the drag force.

Whenever the forces are unbalanced, the particle will accelerate in the direction of the resultant force at a rate defined by force = mass x acceleration. Thus a particle falling from rest into still air will accelerate until the gravitational force is counterbalanced by the drag force,

---

[17]Brooks, F. A. The Drifting of Poisonous Dusts Applied by Airplanes and Land Rigs. Agricultural Engineering. 28(6):233-239, June 1947.

and approach a constant terminal velocity, V_t. It should be emphasized that for water drops falling in air, particles less than 100 μm in size will approach their terminal velocity in less than 25 mm (1 inch). The distance required to achieve 95% of the terminal velocity increases to approximately 0.6 m for a 500 μm particle and 5 m for a 2,000 μm particle.[7]

The terminal velocity for liquid droplets may vary from the rigid sphere terminal velocity due to deformation of the particle as well as circulation within the droplet. The terminal velocity of water drops falling in air has been accurately determined and the results indicate that for drops below 80 μm the terminal velocity approaches that calculated by Stokes Law.[7] Table 5 illustrates the terminal velocities of water drops as well as rigid spheres.

To minimize drift, the droplets should be large. However, for a given application rate the number of droplets available varies inversely with the cube of the mass median diameter. Table 5 also illustrates the theoretical number of uniformly sized drops per square area of flat surface for a 9.3 g/m^2 (10 gal/acre) application. This hypothetical case was included to illustrate the relative effect of droplet size on the coverage and distribution aspects. A plant canopy is three dimensional and the surface area of the plant that requires coverage is many times larger than the surface ground area it occupies.

Although the theoretical number of droplets continues to increase with a reduction in size, the settling velocity decreases and the resultant deposition at the desired location may reach a peak and then drop off rapidly with a further reduction in droplet size. Aerodynamic catch also plays a part in the deposit of small droplets which below 25 μm increasingly tend to be directed around an object rather than impacting.[7]

Table 5. TERMINAL VELOCITIES OF PARTICLES IN AIR AND NUMBER OF DROPS/AREA[7]

Diameter, μm	Rigid sphere: Specific gravity = 0.8 V_t, m/s	(ft/sec)	Rigid sphere: Specific gravity = 1.0 V_t, m/s	(ft/sec)	Rigid sphere: Specific gravity = 2.5 V_t, m/s	(ft/sec)	Water droplet: Specific gravity = 1.0 V_t, m/s	(ft/sec)	No. of drops based on 9.3 g/m², drops/m²	(drops/in²)
1	0.000027	(0.000088)	0.000034	(0.00011)	0.000085	(0.00028)	0.00003	(0.0001)	1.78×10^{13}	(1.15×10^{10})
10	0.002	(0.008)	0.003	(0.01)	0.008	(0.025)	0.003	(0.01)	1.78×10^{10}	(1.15×10^{7})
50	0.06	(0.20)	0.07	(0.25)	0.2	(0.63)	0.07	(0.25)	1.43×10^{8}	(9.22×10^{4})
100	0.21	(0.68)	0.26	(0.85)	0.5	(1.8)	0.27	(0.89)	1.79×10^{7}	(1.15×10^{4})
200	0.6	(1.9)	0.7	(2.4)	1.4	(4.6)	0.7	(2.4)	2.23×10^{6}	(1.44×10^{3})
300	1.0	(3.2)	1.2	(3.9)	2.3	(7.5)	1.2	(3.8)	6.6×10^{5}	(4.27×10^{2})
400	1.4	(4.6)	1.6	(5.3)	3.0	(10.0)	1.6	(5.3)	2.8×10^{5}	(1.80×10^{2})
500	1.7	(5.6)	2.1	(6.8)	3.8	(12.5)	2.1	(6.8)	1.4×10^{5}	(9.2×10^{1})
1,000	3.4	(11.0)	4.1	(13.3)	7.0	(23.0)	4.0	(13.2)	1.8×10^{4}	(1.15×10^{1})
2,000	5.8	(19.0)	6.7	(22.0)	11.3	(37.0)	6.4	(21.0)	2.2×10^{3}	(1.4)
3,000	7.6	(25.0)	8.8	(29.0)	14.0	(46.0)	7.9	(26.0)	6.6×10^{2}	(4.3×10^{-1})
4,000	9.1	(30.0)	10.4	(34.0)	16.5	(54.0)	8.8	(29.0)	2.8×10^{2}	(1.8×10^{-1})
5,000	10.4	(34.0)	11.6	(38.0)	18.3	(60.0)	9.1	(30.0)	1.4×10^{2}	(9.2×10^{-2})

Reprinted from Pesticide Formulations, p. 275-341, by Marcel Dekker, Inc., 1973.

b. Wind Speed - Wind speed is of importance in determining transport distances and can provide an estimate of movement under stable atmospheric conditions. Table 2 illustrates the theoretical horizontal transport at nonturbulent conditions for various size droplets falling at terminal velocity. The table serves only as a guide to show the effect of droplet size and points out the dramatic increase in drift distance for droplets below 100 μm. The table is based on no evaporation and no turbulence as well as uniform wind velocity. However, in air movement near the boundary layer the velocity decreases with a decrease in height until it reaches zero at a height referred to as z_0, a value called the roughness length. The wind velocity profile varies with surface roughness and atmospheric stability.[7]

c. Turbulence and Atmospheric Stability - Turbulence is related to the roughness of the ground surface, the temperature gradient with height, and the wind velocity gradient with height. Turbulence near the ground is partially induced by the surface roughness, which is dependent on the size of and distance between protruding elements. Vertical and horizontal eddies are mechanically produced as the air streams over and around the protruding elements. In addition, mechanical turbulence is induced by the gradient of wind velocity as it produces wind shear. The velocity gradient is generally greater near the ground, increases with wind speed for a given height, and is affected by the surface roughness. The temperature gradient is important since it represents the energy available for producing or depressing eddies by buoyancy forces.[7]

The temperature profiles near the ground change diurnally. At midday a superadiabatic condition may exist near the ground because of high solar radiation. During early morning or late afternoon a strong inversion may exist.

During the morning heating period a mixed layer may exist near the ground with an inversion layer persisting above.[7]

An irrigated crop will modify these temperature and stability conditions because some of the incoming solar radiation is utilized in evapotranspiration from the crops so that less is available for heating the air. Thus the air over an irrigated crop will never be as unstable as that over dry land. It is even possible to get stable conditions over an irrigated crop several hours before sunset. This is even more significant if the irrigated field is located immediately downwind from a large dry area so that hot air is being carried above and across the colder field.[18]

Field studies have shown[19] that there is a progressive decrease in downwind drift residues (and, presumably, airborne concentrations) with a decrease in stability. Turbulent or unstable conditions cause the spray effluent to swirl downward and reach the ground near the source. Inversion or stable conditions, which permit long periods of horizontal diffusion, allow the effluent to spread over a wide area. The fact that stability is favorable for stack disposal, but not for pesticide spraying, is a result of height of disposal and particle size. Stack particle concentration is reduced by a wide area diffusion that is not possible in a low height pesticide distribution.

---

[18]Scotton, J. W. Atmospheric Transport of Pesticide Aerosols. U.S. Department of Health, Education, and Welfare, Public Health Service. Washington. PB 228 612. July 1965. 30 p.

[19]Yates, W. E., N. B. Akesson, and H. H. Coutts. Drift Hazards Related to Ultra-Low-Volume and Diluted Sprays Applied by Agricultural Aircraft. Transactions of the American Society of Agricultural Engineers. 10(5):628-632,638, 1967.

d. Evaporation - All spraying equipment produces a spectrum of droplet sizes, with the further complication that evaporation of a water carrier will occur unless atmospheric humidity is quite high. Since small droplets fall more slowly than larger ones, evaporation of the carrier serves to increase the size range of the droplets over their range when emitted into the air.[20] Water is the most frequently used carrier because of availability, low cost, and freedom from phytotoxic effects. Vapor pressure is the prevailing factor controlling evaporation, but it is not easily evaluated, particularly when complex mixtures of emulsions and solutions are used in the spray formulation.

The fraction of droplets that are subject to drift is set roughly as that portion of the droplet spectrum below 100 μm. While this diameter may be considered unduly large for drift, in a typical spray mixture 95% of the liquid is water, which will quickly evaporate and reduce a 100-μm droplet to only 40 μm in about 15 seconds.[10] Thus, within a few hundred meters of an aircraft, the airborne fraction of the spray in a drift "cloud" will be reduced to a volume equivalent to the relatively nonvolatile fraction. The reduced droplet size produces a lower settling rate that causes a greater portion of the drift "cloud" to be dispersed and carried out of the target area.

The driving force of evaporation can be expressed as the difference between the vapor pressure at the droplet surface and that in the surrounding air. The rate of change of

---

[20]Pooler, F. Atmospheric Transport and Dispersion of Pesticides. (Presented at the Symposium on Guidelines for Environmental Studies of Pesticides. 162nd National Meeting, American Chemical Society. Washington. September 1971.) 20 p.

diameter (d) of a single drop in a large volume of surrounding air with time (t) can be expressed as:

$$\frac{\partial d}{\partial t} = - \frac{KC_V \Delta P}{2\pi dP} \qquad (2)$$

where ΔP = vapor pressure gradient between the surrounding air and the droplet surface

P = partial pressure of air

K = diffusivity of water vapor in air at the ambient temperature

C_V = effective transfer coefficient at instantaneous fall velocity V

The equation shows that the rate of change in diameter is inversely proportional to the drop diameter at zero relative velocity. Thus evaporation would change the diameter of a small drop at a faster rate than that of a larger drop.[7]

Curves of the drop diameter as a function of time for water drops falling in air of different humidities have been presented in the literature.[7] Table 6 illustrates the time required for various size droplets to reduce to 10% of original volume, and the vertical distances they would fall. In this study the evaporation rate was based on the assumption that the drops were falling at a terminal velocity which varied with evaporation, and the instantaneous velocity was based on Stokes Law; thus, results are limited to drops less than 100 μm. The table also represents a minimum time and distance since the data are based on an evaporation rate for a single pure water drop in a large atmosphere. The evaporation from the emission of a large number of drops in a spray would increase the partial vapor pressure in the surrounding air and increase the drying period.[7] The effect of an increase in relative humidity from 30% to 70% is also shown in Table 6.

Table 6. TIME AND VERTICAL FALL DISTANCE FOR PURE WATER TO EVAPORATE FROM D_0 TO D_f AT 25°C, 101.3 kPa[7]

Initial diameter D_0, μm	Final diameter equivalent to 10% of initial volume D_f, μm	30% Relative humidity[a]		70% Relative humidity[b]	
		Time, s	Vertical distance, m	Time, s	Vertical distance, m
100	46	4.2	0.76	9.2	1.62
80	37	2.8	0.24	6.3	0.67
60	28	1.7	<0.15	3.8	0.23
40	19	0.8	<0.15	1.8	<0.15

[a] ΔP = 2.3 kPa (0.68 in. Hg).

[b] ΔP = 1.0 kPa (0.29 in. Hg).

Reprinted from Pesticide Formulations, p. 275-341, by Marcel Dekker, Inc., 1973.

D. GEOGRAPHICAL DISTRIBUTION

Cotton is defoliated or desiccated prior to harvest wherever it is grown in the U.S. The major concentrations of cotton producing regions are located in the Mississippi River Valley from the bootheel of Missouri to the top of Louisiana, the Blacklands region of Texas running roughly from Austin to Paris, and the High and Low Rolling Plains regions of Texas situated in and just below the panhandle. Other, smaller regions are the Lower Rio Grande Valley of Texas, the Gulf Coast (around Corpus Christi) of Texas, the San Joachin Valley in California, and a disperse belt in the Deep South below the Appalachian Mountains.

Figure 3[21] illustrates the geographical distribution of cotton harvested. In conjunction with this figure, Figure 4 shows the distribution of all crop acreage treated with chemicals for defoliation, growth control, or thinning of fruit. The

[21] Census of Agriculture, 1969. Volume V, Special Reports. Part 15, Graphic Summary. Washington, U.S. Bureau of the Census, 1973.

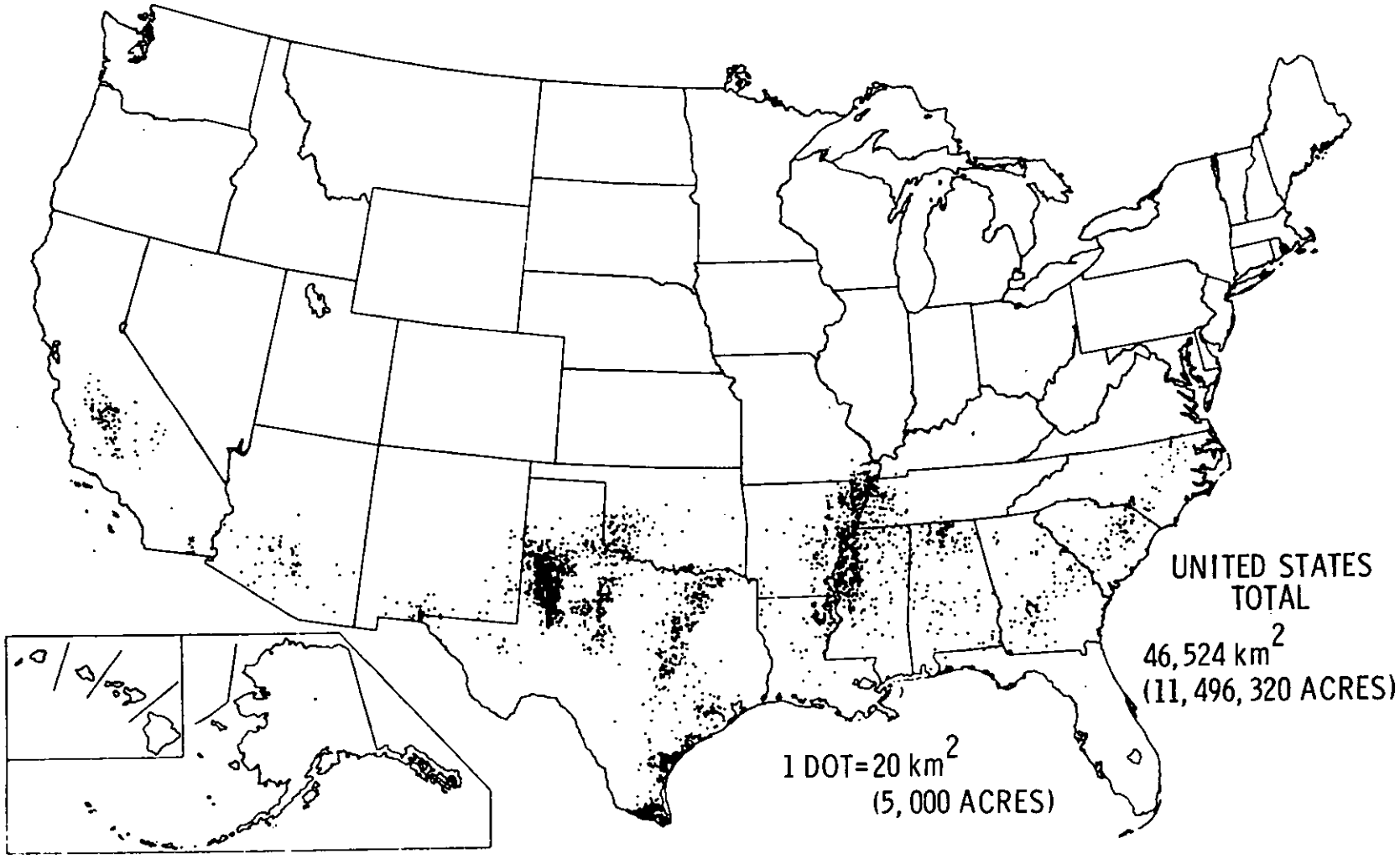

Figure 3. Cotton harvested, 1969[21]

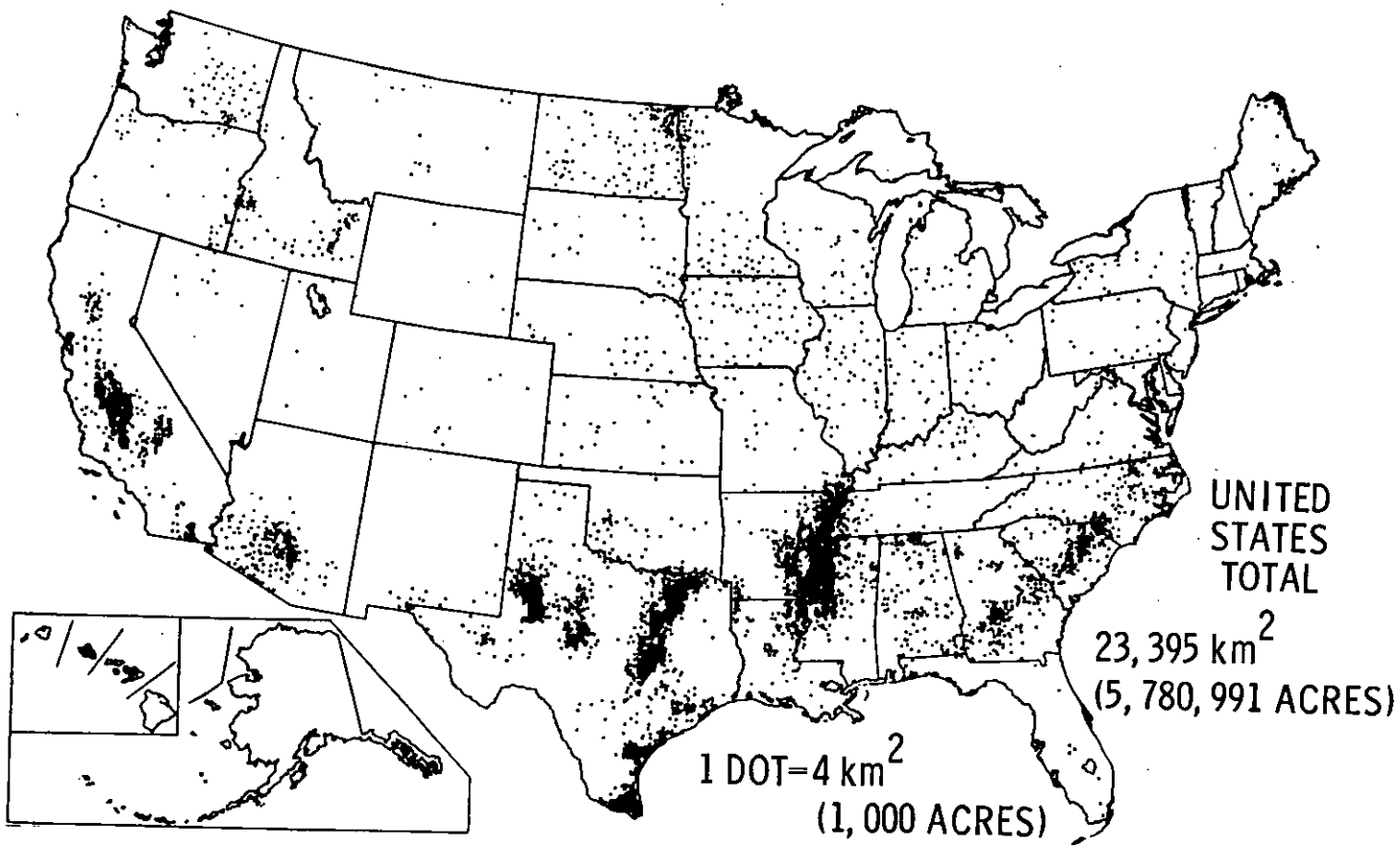

Figure 4. Acreage treated with chemicals for defoliation or for growth control of crops or thinning of fruit, 1969[21]

other crops chemically defoliated are potatoes, canning tomatoes, and species of legumes grown for seed,[1] but it can be readily seen from these two figures that the usage of defoliation chemicals closely follows the areas where cotton is harvested. One notable exception is the upper regions of the High and Low Rolling Plains (panhandles) of Texas and Oklahoma where the cotton matures just before the first freeze of autumn. Growers there wait for the freeze to desiccate the cotton naturally.

Texas is the major cotton producing state, harvesting about 40% of the U.S. cotton acreage. Table 7 shows the percent of U.S. total cotton acreage harvested for the major producing states. The Mississippi River Valley states of Mississippi, Arkansas, Louisiana, Tennessee, and Missouri produce about 35% of the total cotton crop.

Table 7. COTTON ACREAGE HARVESTED, PERCENT OF U.S. TOTAL

State	1970	1971	1972
Texas	43.9	41.3	39.4
Mississippi	10.7	11.6	12.3
Arkansas	9.6	9.9	10.7
California	5.9	6.5	6.5
Alabama	4.8	4.9	4.4
Louisiana	4.0	4.4	5.1
Oklahoma	4.0	3.5	3.9
Tennessee	3.5	3.7	3.7
Georgia	3.4	3.4	3.6
South Carolina	2.6	2.8	2.6
Arizona	2.5	2.5	2.4
Missouri	2.2	2.7	3.1
TOTAL	97.1	97.0	97.8

SECTION IV

EMISSIONS

A. SELECTED POLLUTANTS

The emissions from cotton defoliation or desiccation consist entirely of fugitive aerosols of the herbicide used. Table 8 presents the chemicals used and their respective toxicities and TLV's. Sodium chlorate, DEF, and Folex are most commonly used to defoliate cotton; arsenic acid and paraquat are most commonly used to desiccate cotton.[22-26] Table 9 shows the rates of application and dilution data for the major chemicals. All are diluted with water, and perhaps a very small amount of surfactant or sticking agent is added to the formulation.

---

[22]Akesson, Dr. N. B. Department of Agricultural Engineering, University of California-Davis. Personal communication, March 1975.

[23]Metzer, Dr. R. B. Texas Agricultural Extension Service, College Station, Texas. Personal communication, February 1975.

[24]Ware, Dr. G. W. Department of Entomology, University of Arizona, Tucson, Arizona. Personal communication, January 1975.

[25]Miller, Dr. C. S. Department of Plant Sciences, Texas A & M University, College Station, Texas. Personal communication, January 1975.

[26]Mullins, Dr. J. A. Tennessee Agricultural Extension Service, Jackson, Tennessee. Personal communication, January 1975.

Table 8. DEFOLIANTS AND DESICCANTS USED FOR COTTON

Most common name	Chemical name	Other names	Oral-rat LD_{50}, mg/kg	TLV, mg/m^3	Comments
Defoliants					
DEF	s,s,s-Tributylphosphorotrithioate	Butiphos, Chemagro 1776, Chemagro B-1776, DEF Defoliant, De-Green, Fos-Fall A, E-Z-off-D, Ortho Phosphate Defoliant	150[27]	0.96[a]	Major use
Folex	s,s,s-Tributylphosphorotrithioite	Merphos, Deleaf Defoliant, Easy Off-D, Mobil Cotton Defoliant	910[27]	3.9[a]	Major use
Sodium chlorate	Chloric acid, sodium salt	Chlorax, De-Fol-Ate, Drop-Leaf, Fall, MBC, Monobor-chlorate, Shed-A-Leaf, Tumbleaf	1,200[28]	4.8[a]	Major use, mixed with sodium metaborates or magnesium chloride
Pentachlorophenol	Pentachlorophenol	PCP, Ded-Leaf, Dowicide 7	27[27]	0.5[29]	Old, minor use
Endothall	7-Oxabicyclo(2.2.1)heptane-2,3-dicarboxylic acid	Accelerate, Des-I-Cate	80[27]	0.6[a]	Minor use, sodium salt used
Calcium cyanamide	Calcium cyanamide	AERO Cyanamid	39[27]	0.5[29]	Old, once principally used
Magnesium chlorate	Chloric acid, magnesium salt		5,250(LDLo)[27]	15[a]	Minor use
Ammonia	Ammonia		-[b]	18[29]	Old
Desiccants					
Arsenic acid	Orthoarsenic acid	Desiccant L-10, Zotox, Sinergized H-10, Hi-Yield	-[b]	0.5[29]	Major use
Paraquat	1,1'-Dimethyl-4,4'-bipyridinium salt	Gramoxone, Aerial Gramoxone, Paraquat CL	57[27]	0.5[29]	Major use, chloride and bismethyl sulfate salts
Cacodylic acid	Hydroxydimethyl arsine oxide	Silvisar 510, Rad-E-Cate, Ansar 138	1,350[27]	5.2[a]	Minor use
Sodium cacodylate	Methanearsonic acid	Phytar 560, Bollseye	3,200[27]	10.2[a]	Minor use
Potassium azide	Potassium azide		-[b]	-[b]	Minor use

[a]Estimate, see Appendix C.

[b]Not available.

- - - - - - - - - - - -

[27]The Toxic Substances List, 1974 Edition. U.S. Department of Health, Education, and Welfare. Rockville, Maryland. HEW Publication No. (NIOSH) 74-134. June 1974. 904 p.

[28]1969 Farm Chemicals Handbook. Willoughby, Ohio, Meister Publishing Co., 1968. p. D158.

[29]TLVs® Threshold Limit Values for Chemical Substances and Physical Agents in the Workroom Environment with Intended Changes for 1975. American Conference of Governmental Industrial Hygienists. Cincinnati. 1975. 97 p.

Table 9. FORMULATION AND DILUTION OF MAJOR HARVEST-AID CHEMICALS[30]

Chemical name	Percent principal formulation	Suggested rate of application	Maximum registered rate	Dilution data	
				Application by airplane	Application by ground machine
Sodium chlorate	18.2 to 28.0	1.14×10^{-5} to 4.59×10^{-5} m (0.75 to 3 gal/acre)	9.2 g/m^2 (5 lb/acre)	7.65×10^{-5} to 15.3×10^{-5} m (5 to 10 gal/acre)	1.53×10^{-4} to 3.06×10^{-4} m (10 to 20 gal/acre)
DEF	70.5	2.5×10^{-6} to 3.8×10^{-6} m (0.16 to 0.25 gal/acre)	2.8 g/m^2 (1.5 lb/acre)	7.65×10^{-5} to 15.3×10^{-5} m (5 to 10 gal/acre)	1.53×10^{-4} to 3.06×10^{-4} m (10 to 20 gal/acre)
Folex	71.2	2.5×10^{-6} to 3.8×10^{-6} m (0.16 to 0.25 gal/acre)	2.8 g/m^2 (1.5 lb/acre)	7.65×10^{-5} to 15.3×10^{-5} m (5 to 10 gal/acre)	1.53×10^{-4} to 3.06×10^{-4} m (10 to 20 gal/acre)
Arsenic acid	75.0	3.8×10^{-6} to 5.7×10^{-6} m (0.25 to 0.375 gal/acre)	8.1 g/m^2 (4.4 lb/acre)	7.65×10^{-5} to 15.3×10^{-5} m (5 to 10 gal/acre)	1.53×10^{-4} to 2.30×10^{-4} m (10 to 15 gal/acre)
Paraquat	29.1	1.9×10^{-6} to 3.8×10^{-6} m (0.125 to 0.25 gal/acre)	0.9 g/m^2 (0.5 lb/acre)	Not applicable	1.53×10^{-4} to 4.59×10^{-4} m (10 to 30 gal/acre)

[30] 1969 Cotton Defoliation Guide. Texas Agricultural Extension Service. College Station, Texas. Bulletin No. L-145.

Calcium cyanamide is excluded as a major cotton defoliant, since it is believed now to be used primarily as a fertilizer rather than an herbicide. The compound is not produced domestically, but imports have declined from a high of 1.48×10^5 metric tons (1.63×10^5 tons) in 1946, when it enjoyed major use as a cotton defoliant, to 6.8×10^3 metric tons (7.5×10^3 tons) in 1970.[31]

1. Folex and DEF

Folex and DEF function exclusively as defoliants. Chemically they are closely related and can be made from the same raw materials; butyl mercaptan and phosphorus trichloride react to form the phosphorotrithioite (Folex). This is then air oxidized to produce the phosphorotrithioate (DEF). When Folex is used as a cotton defoliant it probably is converted to DEF in the atmosphere. In chemical residue analysis, Folex oxidizes to DEF upon standing in dilute solution, especially in acetone, and is often seen as DEF if the analysis is carried through an extraction and clean-up procedure at residue levels where air oxidation would cause conversion.[32] No data are published on further degradation products, and no quantitative data were found on toxic properties of DEF or Folex.

2. Sodium Chlorate

Sodium chlorate ($NaClO_3$) is freely soluble in water and highly toxic to most plants, hence it is a nonselective

---

[31]Strickland, J., and T. Blue. Environmental Indicators for Pesticides. Stanford Research Institute, Council on Environmental Quality Contract EQC 217. Menlo Park, California. PB 210 666. April 1972. p. 38.

[32]FDA Pesticide Analytical Manual. Vol. II. Pesticide Reg. Sec. 120,272. U.S. Department of Health, Education, and Welfare. November 1973.

herbicide. Chlorate defoliants are usually sold in the form of dry crystals, to be dissolved in water and applied as a spray. Although it is apparently safe to handle magnesium chlorate, the more popular sodium chlorate is a powerful oxidizing agent and may cause spontaneous combustion of organic matter.[33] For commercial use, sodium chlorate is mixed with fire suppressors, usually sodium borates or magnesium chloride; these mixtures have proved quite safe.[3] The compound is leached from the soil rather rapidly, and appears to be slowly broken down by soil microorganisms, so that in humid areas the herbicidal effect is not permanent.[33]

Sodium chlorate is severely irritating to mucous membranes. No data are available on its acute inhalation toxicity, nor on its chronic toxicity, and no residue tolerances have been set. No subacute or chronic hazards to human health have been attributed to the use of sodium chlorate as an herbicide.[34]

3. Arsenic Acid

Arsenic acid functions exclusively as a desiccant. Chemically it is known as orthoarsenic acid (H_3AsO_4) and is sold as a 75% formulation. It is corrosive to metal and is not applied by airplane for this reason.

When arsenical compounds are present in the air, arsenic may be absorbed by inhalation, ingestion, or absorption through

---

[33]Weed Killers. In: Kirk-Othmer Encyclopedia of Chemical Technology, Second Edition. Vol. 22. New York, John Wiley & Sons, Inc., 1969. p. 19.

[34]von Rümker, R., E. W. Lawless, and A. F. Meiners. Production, Distribution, Use and Environmental Impact Potential of Selected Pesticides. Midwest Research Institute, Council on Environmental Quality. Contract EQC-311. Kansas City, Missouri. March 1974. p. 256.

the skin. The airborne arsenic frequently causes irritation of the skin and mucous membranes, absorption taking place most readily on moist surfaces such as folds in the skin or mucous membranes. Thus, dermatitis, mild bronchitis, and nasal irritation are common symptoms of arsenic poisoning. With more severe exposure, perforation of the nasal septum takes place.[35]

A residue tolerance of 4 ppm as As_2O_3 equivalent on cottonseed has been set.[30]

4. Paraquat

Paraquat is the accepted common name for a formulation of 1,1'-dimethyl-4,4'-bipyridinium ion, a quarternary ammonium compound. The concentration of the active ingredient is expressed as the amount of bipyridinium cation per gallon and is formulated to contain 240 kg of the cation per cubic meter (2 lb/gal). Anions included in paraquat formulations are the chloride (Cl) and the bis methyl sulfate (MS). However, all application rates are expressed in terms of the active cation. The material is readily soluble in water, nonvolatile, and nonflammable. The concentrated solution is corrosive to mild steel, tin plate, galvanized iron, and aluminum. Paraquat is formulated with a corrosion inhibitor; however, the dilute solution is still corrosive to galvanized iron.[2]

The chemical can be degraded by ultraviolet light to methyl quarternary isonicotinic acid and methyl amine hydrochloride.[36]

---

[35]Sullivan, R. J. Preliminary Air Pollution Survey of Arsenic and Its Compounds, A Literature Review. Litton Systems, Inc., HEW Contract PH 22-68-25. October 1969. p. 2.

[36]Slade, P. Photochemical Degradation of Paraquat. Nature. 207:515-516, 1965.

A very small oral dose of the concentrate by ingestion or inhalation may produce irreversible lung fibrosis.[37] Damage to the lung is characterized initially by edema and hemorrhage, and at later stages by fibrosis. Except when extremely large amounts are taken, signs of pulmonary damage are not usually seen for several days after ingestion.[38]

A residue tolerance of 0.5 ppm on cottonseed has been set.[30]

B. EMISSION FACTORS

Investigations of spray drift from agricultural application of pesticides have been reported by several authors. Concern has been mostly centered on off-target deposits of chemicals rather than the remaining airborne fraction; however, some researchers supplemented their drift deposit collection stations downwind with air sampling devices. Table 10 is a compilation of the information gathered from those articles containing data that can be used to calculate emission factors.[15,39-41]

---

[37]Staiff, D. C., S. W. Comer, J. F. Armstrong, and H. R. Wolfe. Exposure to the Herbicide, Paraquat. Bulletin of Environmental Contamination and Toxicology. 14(3):334-340, 1975.

[38]Rose, M. S. The Search for an Effective Treatment of Paraquat Poisoning. Chemistry and Industry (London). 1975(10):413-415, May 17, 1975.

[39]Argauer, R. J., H. C. Mason, C. Corley, A. H. Higgins, J. N. Sauls, and L. A. Liljedahl. Drift of Water-Diluted and Undiluted Formulations of Malathion and Azinphosmethyl Applied by Airplane. Journal of Economic Entomology. 61(4):1015-1020, August 1968.

[40]Ware, G. W., B. J. Estesen, W. P. Cahill, P. D. Gerhardt, and K. R. Frost. Pesticide Drift. III. Drift Reduction with Spray Thickeners. Journal of Economic Entomology. 63(4):1314-1316, August 1970.

[41]Ware, G. W., B. J. Estesen, W. P. Cahill, and K. R. Frost. Pesticide Drift. V. Vertical Drift from Aerial Spray Applicaitons. Journal of Economic Entomology. 65(2):590-592, April 1972.

Table 10. CALCULATED EMISSION FACTORS FROM PUBLISHED DATA FOR DRIFT FROM AGRICULTURAL SPRAYING

Pesticide chemical	Application equipment	Nozzle type	Application rate, mg/m^2	Downwind distance, m	Emission factor, g/kg
Azinphosmethyl	Airplane	Hollow cone, down	56	60	118.5[39]
Azinphosmethyl	Airplane	Hollow cone, down	56	60	93.1[39]
Azinphosmethyl	Airplane	Hollow cone, down	56	600	31.8[39]
Azinphosmethyl	Airplane	Hollow cone, down	56	600	28.0[39]
Methoxychlor	Hi-Boy	Tee-Jet	168	50	28.0[15]
Methoxychlor	Hi-Boy	Tee-Jet	168	100	29.0[15]
Methoxychlor	Hi-Boy	Tee-Jet	202	50	17.0[15]
Methoxychlor	Hi-Boy	Tee-Jet	202	100	11.0[15]
Methoxychlor	Airplane	Hollow cone	224	50	59.0[15]
Methoxychlor	Airplane	Hollow cone	224	100	25.0[15]
Methoxychlor	Airplane	Hollow cone	224	50	14.0[15]
Methoxychlor	Airplane	Hollow cone	224	100	12.0[15]
Methoxychlor	Airplane	Diaphram[a]	224	131	110.0[40]
Methoxychlor	Airplane	Diaphram[a]	224	332	143.0[40]
Methoxychlor	Airplane	Diaphram[a]	224	735	35.0[40]
Methoxychlor	Airplane	Diaphram[a]	224	1,539	101.0[40]
Methoxychlor	Airplane	Flood tip	52	25	19.0[41]
Methoxychlor	Airplane	Flood tip	52	50	7.0[41]
Methoxychlor	Airplane	Flood tip	52	100	78.0[41]
Methoxychlor	Airplane	Flood tip	52	200	17.5[41]

[a] 0.785 rad (45°) tilt down.

The emission factors shown in Table 10 range over an order of magnitude, mostly due to the variability in application systems and meteorological conditions. In general, the emission factors within experiments tend to be lower as the downwind distance of the air samplers is increased, due to settling of the spray aerosols.

Preliminary field sampling of arsenic acid application to cotton was conducted and emission factors calculated. Table 11 summarizes the arsenic acid emission data. Appendix B contains the details and methods of calculation used to prepare Table 11.

The mean emission factor for arsenic acid application (6.1 ± 2.9 g/kg) was eight times lower than the mean emission factor estimated from literature data (48.8 g/kg). This is attributable to the use of a ground machine rather than an airplane and to the low volatility of arsenic acid. Emission factors for application of sodium chlorate, DEF (or Folex), and paraquat have been assumed to be 10 g/kg which is slightly higher than arsenic acid. Table 12 summarizes the emission factors for defoliation/desiccation of cotton which were used in calculations of ground level concentration, mass emissions, and affected population in Section IV.D.

C. DEFINITION OF REPRESENTATIVE SOURCES

Due to the heterogeneous nature of cotton defoliation and desiccation, four representative sources are defined for use in determining the source severity which is described in Section IV.D and Appendix A.

Table 11. CALCULATED EMISSION FACTORS FROM PRELIMINARY FIELD SAMPLING OF ARSENIC ACID APPLICATION TO COTTON

Sample number	Application equipment	Nozzle type	Application rate, mg/m^2	Downwind distance, m	Emission factor, g/kg
A-1R	Hi-Boy	Hollow cone, up	1,052	300	11.4
A-2R	Hi-Boy	Hollow cone, up	1,052	250	16.2
A-1L	Hi-Boy	Hollow cone, up	1,052	250	5.7
B-1R	Hi-Boy	Hollow cone, up	1,052	50	0.9
B-4R	Hi-Boy	Hollow cone, up	1,052	250	6.8
B-2L	Hi-Boy	Hollow cone, up	1,052	150	6.8
B-3L	Hi-Boy	Hollow cone, up	1,052	250	10.0
C-1R	Hi-Boy	Spinner cone, down	1,052	200	1.9
C-2R	Hi-Boy	Spinner cone, down	1,052	25	2.3
C-3R	Hi-Boy	Spinner cone, down	1,052	400	4.3
C-4R	Hi-Boy	Spinner cone, down	1,052	25	4.2
C-3L	Hi-Boy	Spinner cone, down	1,052	25	2.7
			Average	=	6.1 ± 2.9 (95% confidence level)

Table 12. EMISSION FACTORS FOR DEFOLIATION OR DESICCATION OF COTTON

Pollutant	Emission factor, g/kg	(lb/ton)
Sodium chlorate	10.0[a]	(20.0)
DEF	10.0[a]	(20.0)
Arsenic acid	6.1 ± 2.9	(12.2 ± 5.7)
Paraquat	10.0[a]	(20.0)

[a]Assumed.

The representative source for sodium chlorate application consists of a cotton farm of 0.70 km^2 (173 acres), located in the Mississippi River Delta region, with an aerial application rate of 0.56 g/m^2 (5.0 lb/acre) and an emission factor of 10 g/kg. The representative source for DEF application consists of a cotton farm of 0.70 km^2 located in the Mississippi River Delta region, with an aerial application rate of 0.17 g/m^2 (1.5 lb/acre) and an emission factor of 10 g/kg. The representative source for arsenic acid application consists of a cotton farm of 0.61 km^2 (150 acres) located in the Blacklands region of Texas, with a ground machine application rate of 0.49 g/m^2 (4.4 lb/acre) and an emission factor of 6.1 g/kg. The representative source for paraquat application consists of a cotton farm of 1.05 km^2 (260 acres) located in the Panhandle region of Texas, with an aerial application rate of 0.056 g/m^2 (0.5 lb/acre) and an emission factor of 10 g/kg.

The following assumptions were included to characterize the spraying conditions: (1) the cotton field is square; (2) the spray swath is perpendicular to the wind direction; (3) the effective height of emission is negligible; (4) U.S. average meteorological conditions prevail; and (5) the time of exposure to emissions is taken to be the time necessary to

spray the complete field plus the time needed to turn the spray equipment.

D. SOURCE SEVERITY

1. Definition

To obtain an indication of the hazard potential of the emissions from agricultural spray applications, the source severity, S_A, for the special case of agricultural field spraying was defined (Equation 1) as:

$$S_A = \frac{\overline{X}}{F_A} \tag{1}$$

where $\overline{X}$ is the time-averaged ground level concentration during spraying at the downwind field perimeter from a representative source (see Section IV.C), and F_A is a threshold limit value (TLV) for noncriteria pollutants with a safety factor of 100 applied to the TLV. No correction is applied for exposure time since it is 8 hours or less for the representative source. This source severity factor represents the ratio of time-averaged maximum ground level exposure to the hazard level of exposure for a particular pollutant.

2. Ground Level Concentration

The time-averaged ground level concentration, $\overline{X}$, of the pollutant resulting from agricultural spray applications was estimated by Gaussian plume dispersion techniques (see Appendix A). The maximum concentration to which a population may be exposed is assumed to be located at a field's perimeter downwind from the source. The following equation was used for the calculation of $\overline{X}$:

$$\overline{X} = \left(\frac{2}{\pi}\right)^{1/2} \frac{nQ_L}{tu\sigma_{zI}} \tag{3}$$

where n = number of spray swaths made in the representative field (dimensionless)

Q_L = emissions per length for a single spray pass, g/m

t = time to complete spraying representative field including turning time, s

u = mean wind speed, m/s (assumed to be U.S. average, 4.5 m/s)

σ_{zI} = standard deviation of the distribution of pollutant material in the vertical direction for a puff (neutral stability assumed, $\sigma_{zI} = 0.15\ D^{0.70}$), m

D = distance from center of representative field to perimeter, m

π = 3.14

Substituting Equation 3 into Equation 1 and including $F_A = TLV \cdot 1/100$ yielded the following equation for the source severity:

$$S_A = \frac{119 \cdot n \cdot Q_L}{t \cdot TLV \cdot D^{0.70}} \qquad (4)$$

The nature of this type of source precludes the inclusion of a source severity distribution since the model predicts severities which approach infinity for small field sizes. The smallest cotton field size (finite) is unknown and of only academic interest.

3. Population Exposed

To obtain a quantitative evaluation of the maximum population invluenced by a high pollutant concentration due to emissions from spray applications in a typical cotton field, the area exposed to the time-averaged ground level concentration, $\overline{\chi}$, for which $\overline{\chi}/F_A \geq 0.1$ was obtained by determining the area within the isopleth for $\overline{\chi}$.[42] The number of persons within the exposed area was then calculated by using the proper population density.

[42]Turner, D. B. Workbook of Atmospheric Dispersion Estimates. U.S. Department of Health, Education, and Welfare. Cincinnati. Public Health Service Publication No. 999-AP-26. May 1970, 65 p.

The representative population density used in the calculation of affected population was the average of the state population densities for Mississippi, Louisiana, and Arkansas for the Mississippi River Delta region. For the Blacklands and Panhandle regions of Texas, the average of the population densities of the counties listed in Appendix A was used.

For each of the major cotton defoliant and desiccant chemicals with an emission source severity, S_A, greater than or equal to 0.1, the area and population exposed are shown in Table 13. The source severity for arsenic acid application by ground machine was 0.69 ± 0.32, the highest value among the major defoliants and desiccants. Also, the emission factor for arsenic acid was derived from field sampling of normal practice, actual situations. Source severity factors for paraquat, sodium chlorate, and DEF applications were 0.30, 0.44, and 0.67, respectively. It should be emphasized that these calculations were based on the assumed emission factors mentioned in Section IV.B.

Table 13. SOURCE SEVERITY, AREA, AND POPULATION EXPOSED TO POLLUTANTS FOR WHICH $\overline{\chi}/F_A \geq 0.1$

Pollutant	Source severity	Affected area, km^2 $\overline{\chi}/F_A \geq 0.1$	Population density, persons/km^2	Maximum exposed population, persons
Arsenic acid	0.69 ± 0.32	116.75	52.5	6,134
Paraquat	0.30	17.59	18.3	322
Sodium chlorate	0.44	37.48	20.1	754
DEF	0.67	125.10	20.1	2,517

4. Total Air Emissions

The contribution of cotton defoliation and desiccation to statewide and nationwide air emissions was estimated from

the statewide cotton acreage that was defoliated, multiplied by the percent usage by area for each of the four major chemicals, multiplied by the application rate of each chemical for each state, multiplied by the emission factor for each chemical.

Published data on agricultural usage of pesticides are incomplete, frequently incongruous, and at times actually misleading. Data from several sources had to be collated in order to arrive at the estimates of total air emissions. No measure of accuracy can be attached to these estimates.

Table 14 presents the reported cotton acreage harvested and defoliated for each of the cotton producing states. Metric units are used in Table 14a while English units are used in Table 14b. The area of cotton defoliated in each state was estimated from these data and appears in the right-hand column. Another literature source yielded the quantities of defoliants and desiccants used on crops (mostly cotton) and acreage of crops treated by region, as shown in Table 15. From these data the rate of application by region of the U.S. and the percent usage by area for each of the major harvest-aid chemicals (excluding paraquat) were estimated for each state.

More comprehensive data for Texas, the largest cotton producing state, were obtained and are formatted in Table 16. Desiccation by arsenic acid occurs in Texas in the Rolling Plains, Central Basin, and Grand Prairies regions, while paraquat desiccation was assumed to occur strictly in the High Plains region. The ratio of sodium chlorate to DEF usage by area was taken from Table 15 for the regions of Texas which defoliate.

Table 14a. COTTON ACREAGE HARVESTED AND DEFOLIATED, 1971
(Metric units)

State	No. farms reporting[43]	Reported crop area,[43] km^2	Total crop area,[44] km^2	% Area reported	Reported area defoliated,[43] km^2	% Area defoliated	Estimated area defoliated, km^2
Alabama	2,376	1,378	2,258	61.0	805	58.4	1,319
Arizona	724	743	1,155	64.3	498	67.0	774
Arkansas	4,424	3,383	4,613	73.3	2,405	71.1	3,280
California	2,142	2,223	3,000	74.1	1,887	84.9	3,916
Florida	16	16	38	42.7	15	90.3	34
Georgia	900	656	1,558	42.1	461	70.2	1,094
Kentucky	15	9	17	52.9	4	41.1	7
Louisiana	2,389	1,390	2,023	68.7	878	63.2	1,279
Mississippi	4,957	3,960	5,362	73.8	3,260	82.3	4,413
Missouri	1,287	793	1,267	62.6	311	39.2	497
New Mexico	745	362	609	59.5	11	2.9	18
North Carolina	328	212	708	30.0	164	77.4	548
Oklahoma	828	439	1,603	27.4	38	8.6	138
South Carolina	786	629	1,295	48.6	479	76.2	987
Tennessee	1,818	779	1,720	45.3	277	35.6	612
Texas	13,440	12,153	19,164	63.4	2,333	19.2	3,679
TOTALS	37,175	29,125	46,390	62.8	13,825	47.5	22,035

[43]Census of Agriculture, 1971. Volume V, Special Reports. Part 3, Cotton. Washington, U.S. Bureau of the Census, 1973.

[44]Agricultural Statistics 1973. Washington, U.S. Department of Agriculture, 1973. 617 p.

Table 14b. COTTON ACREAGE HARVESTED AND DEFOLIATED, 1971
(English units)

State	No. farms reporting[43]	Reported crop area,[43] acres	Total crop area,[44] acres	% Area reported	Reported area defoliated,[43] acres	% Area defoliated	Estimated area defoliated, acres
Alabama	2,376	340,491	558,000	61.0	198,914	58.4	325,900
Arizona	724	183,573	285,400	64.3	123,005	67.0	191,200
Arkansas	4,424	835,920	1,140,000	73.3	594,346	71.1	810,500
California	2,142	549,308	741,600	74.1	466,199	84.9	629,600
Florida	16	3,969	9,300	42.7	3,584	90.3	8,400
Georgia	900	162,120	385,000	42.1	113,837	70.2	270,300
Kentucky	15	2,273	4,300	52.9	934	41.1	1,800
Louisiana	2,389	343,521	500,000	68.7	217,061	63.2	316,000
Mississippi	4,957	978,444	1,325,000	73.8	805,627	82.3	1,090,500
Missouri	1,287	195,939	313,000	62.6	76,833	39.2	122,700
New Mexico	745	89,564	150,600	59.5	2,611	2.9	4,400
North Carolina	328	52,439	175,000	30.0	40,567	77.4	135,500
Oklahoma	828	108,383	396,000	27.4	9,336	8.6	34,100
South Carolina	786	155,517	320,000	48.6	118,435	76.2	243,800
Tennessee	1,818	192,437	425,000	45.3	68,413	35.6	151,300
Texas	13,440	3,002,967	4,735,400	63.4	576,403	19.2	909,200
TOTALS	37,175	7,196,865	11,463,200	62.8	3,416,105	47.5	5,245,200

Table 15. QUANTITIES OF DEFOLIANTS AND DESICCANTS (ACTIVE INGREDIENTS) USED ON CROPS AND ACREAGE OF CROPS TREATED, BY REGION, 1971

Region (states with cotton)	Arsenic acid						
	Quantity,[45]		Area,[45]		Rate,		% Usage by area[a]
	1,000 kg	(1,000 lb)	km^2	(1,000 acres)	g/m^2	(lb/acre)	
Corn Belt (Missouri)							0
Appalachian (Kentucky, Tennessee, North Carolina)							0
Southeast (Alabama, Georgia, South Carolina, Florida)	21	(46)	93	(23)	0.22	(2)	2.7
Delta States (Arkansas, Louisiana, Mississippi)							0
Southern Plains (Texas, Oklahoma)	2,710	(5,975)	3,557	(879)	0.76	(6.8)	54.7
Mountain States (Arizona, New Mexico)	24	(52)	125	(31)	0.19	(1.7)	48.4
Pacific States (California)							0

[a] Estimated.

Note: Blanks indicate data not reported.

Table 15 (continued). QUANTITIES OF DEFOLIANTS AND DESICCANTS (ACTIVE INGREDIENTS) USED ON CROPS AND ACREAGE OF CROPS TREATED, BY REGION, 1971

Region (states with cotton)	DEF and Folex						
	Quantity,[45]		Area,[45]		Rate,		% Usage by area[a]
	1,000 kg	(1,000 lb)	km^2	(1,000 acres)	g/m^2	(lb/acre)	
Corn Belt (Missouri)	38	(84)	360	(89)	0.10	(0.9)	91.8
Appalachian (Kentucky, Tennessee, North Carolina)	73	(162)	704	(174)	0.10	(0.9)	89.7
Southeast (Alabama, Georgia, South Carolina, Florida)	592	(1,306)	3,379	(835)	0.18	(1.6)	97.3
Delta States (Arkansas, Louisiana, Mississippi)	1,362	(3,003)	8,324	(2,057)	0.17	(1.5)	90.0
Southern Plains (Texas, Oklahoma)	140	(308)	1,643	(406)	0.9	(0.8)	25.3
Mountain States (Arizona, New Mexico)	24	(51)	125	(31)	0.18	(1.6)	48.4
Pacific States (California)	62	(136)	320	(79)	0.19	(1.7)	13.8

[a]Estimated.

Table 15 (continued). QUANTITIES OF DEFOLIANTS AND DESICCANTS (ACTIVE INGREDIENTS) USED ON CROPS AND ACREAGE OF CROPS TREATED, BY REGION, 1971

Region (states with cotton)	Chlorates and borates						
	Quantity,[45]		Area,[45]		Rate,		% Usage by area[b]
	1,000 kg	(1,000 lb)	km^2	(1,000 acres)	g/m^2	(lb/acre)	
Corn Belt (Missouri)	118	(260)	32	(8)	0.56	(5.0)[a]	8.2
Appalachian (Kentucky, Tennessee, North Carolina)	7	(16)	81	(20)	0.09	(0.8)	10.3
Southeast (Alabama, Georgia, South Carolina, Florida)							0
Delta States (Arkansas, Louisiana, Mississippi)	130	(287)	927	(229)	0.15	(1.3)	10.0
Southern Plains (Texas, Oklahoma)	401	(884)	1,303	(322)	0.30	(2.7)	20.0
Mountain States (Arizona, New Mexico)	1	(2)	8	(2)	0.11	(1.0)	3.2
Pacific States (California)	2,333	(5,145)	2,003	(495)	1.17	(10.4)	86.2

[a]Assumed.

[b]Estimated.

Note: Blanks indicate data not reported.

[45]Andrilenas, P. A. Farmers' Use of Pesticides in 1971 -- Quantities. U.S. Department of Agriculture. Washington. Agricultural Economic Report No. 252. July 1974. 56 p.

Table 16. COTTON ACREAGE HARVESTED AND DEFOLIATED IN TEXAS, 1971

High Plains region		
	Harvested area,[46]	
Counties	km^2	(acres)
Andrews	21.9	(5,400)
Armstrong	5.3	(1,300)
Bailey	231.1	(57,100)
Briscoe	104.4	(25,800)
Carson		
Castro	178.1	(44,000)
Cochran	315.3	(77,900)
Crosby	515.2	(127,300)
Dawson	872.5	(215,600)
Deaf Smith	27.9	(6,900)
Floyd	377.6	(93,300)
Gaines	564.5	(139,500)
Glasscock	59.9	(14,800)
Gray	7.3	(1,800)
Hale	619.2	(153,000)
Hansford		
Hockley	777.8	(192,200)
Howard	296.6	(73,300)
Lamb	667.7	(165,000)
Lubbock	920.7	(227,500)
Lynn	768.5	(189,900)
Martin	408.7	(101,000)
Midland	91.9	(22,700)
Moore		
Parmer	174.8	(43,200)
Randall	4.9	(1,200)
Swisher	148.9	(36,800)

Note: Blanks indicate less than 2.0 km^2 (500 acres).

Table 16 (continued). COTTON ACREAGE HARVESTED AND DEFOLIATED IN TEXAS, 1971

High Plains region (continued)		
Counties	Harvested area,[46] km^2	(acres)
Terry	639.0	(157,900)
Yoakum	223.8	(55,300)
Total Harvested Area	9,023.4	(2,229,700)
Total Defoliated Area	2,255.7	(557,400)
Percent Defoliated	25% (largely desiccated)[23]	

Rio Grande Plain region		
Counties	Harvested area,[46] km^2	(acres)
Atascosa	2.4	(600)
Cameron	414.4	(102,400)
Dimmit		
Duval		
Frio	4.5	(1,100)
Hidalgo	371.5	(91,800)
Jim Wells	24.3	(6,000)
La Salle		
Live Oak	8.7	(2,150)
Maverick	1.6	(400)
Starr	9.7	(2,400)
Webb		
Willacy	225.4	(55,700)
Zapata		
Zavala	13.4	(3,300)
Total Harvested Area	1,075.9	(265,850)
Total Defoliated Area	753.1	(186,100)
Percent Defoliated	70% (mostly defoliated)[23]	

Note: Blanks indicate less than 2.0 km^2 (500 acres).

Table 16 (continued). COTTON ACREAGE HARVESTED AND DEFOLIATED IN TEXAS, 1971

Trans-Pecos region		
Counties	Harvested area,[46] km^2	(acres)
Culberson	11.7	(2,900)
Ector		
El Paso	48.6	(12,000)
Hudspeth	29.7	(7,350)
Jeff Davis		
Pecos	25.9	(6,400)
Presidio	5.1	(1,250)
Reeves	103.2	(25,500)
Total Harvested Area	224.2	(55,400)
Total Defoliated Area		
Percent Defoliated	0%[23]	

Coast Prairie region		
Counties	Harvested area,[46] km^2	(acres)
Brazoria	35.6	(8,800)
Calhoun	6.5	(1,600)
Fort Bend	194.3	(48,000)
Harris	6.1	(1,500)
Jackson	25.9	(6,400)
Liberty	6.1	(1,500)
Matagorda	34.0	(8,400)
Victoria	13.0	(3,200)
Wharton	213.3	(52,700)
Total Harvested Area	534.6	(132,100)
Total Defoliated Area	267.3	(66,050)
Percent Defoliated	50% (mostly defoliated)[23]	

Note: Blanks indicate less than 2.0 km^2 (500 acres).

Table 16 (continued). COTTON ACREAGE HARVESTED AND DEFOLIATED IN TEXAS, 1971

Rolling Plains and Central Basin region		
Counties	Harvested area,[46] km^2	(acres)
Archer	5.3	(1,300)
Baylor	53.8	(13,300)
Bordon	81.3	(20,100)
Callahan	13.0	(3,200)
Childress	170.0	(42,000)
Coleman	19.4	(4,800)
Collingsworth	155.0	(38,300)
Cottle	176.8	(43,700)
Dickens	132.3	(32,700)
Donley	72.4	(17,900)
Fisher	244.0	(60,300)
Foard	35.6	(8,800)
Garza	156.6	(38,700)
Hall	319.3	(78,900)
Hardeman	40.1	(9,900)
Haskell	408.7	(101,000)
Jones	315.7	(78,000)
Kent	46.5	(11,500)
King	32.8	(8,100)
Knox	153.0	(37,800)
Mitchell	198.3	(49,000)
Motley	104.0	(25,700)
Nolan	152.2	(37,600)
Runnels	195.5	(48,300)
Scurry	204.4	(50,500)
Stonewall	69.2	(17,100)
Taylor	48.6	(12,000)
Wheeler	49.8	(12,300)

Table 16 (continued). COTTON ACREAGE HARVESTED AND DEFOLIATED IN TEXAS, 1971

Rolling Plains and Central Basin region (continued)		
	Harvested area,[46]	
Counties	km^2	(acres)
Wichita	21.9	(5,400)
Wilbarger	119.8	(29,600)
Total Harvested Area	3,795.2	(937,800)
Total Defoliated Area	2,467.0	(609,600)
Percent Defoliated	65% (mostly desiccated)[23]	

Grand Prairies region		
	Harvested area,[46]	
Counties	km^2	(acres)
Bell	171.2	(42,300)
Bosque	10.9	(2,700)
Comanche		
Cooke	14.6	(3,600)
Coryell	27.9	(6,900)
Denton	42.9	(10,600)
Hamilton	16.2	(4,000)
Hill	347.6	(85,900)
Johnson	108.1	(26,700)
Tarrant	24.7	(6,100)
Williamson	271.1	(67,000)
Total Harvested Area	1,035.2	(255,800)
Total Defoliated Area	1,011.5	(249,950)
Percent Defoliated	95% to 100% (all desiccated)[23]	

Note: Blanks indicate less than 2.0 km^2 (500 acres).

[46]Texas Cotton Review, 1973-74. Natural Fibers Economic Research. University of Texas at Austin. Research Report No. 104 (PB 235 388). July 1974. 143 p.

For Arizona, very specific agricultural usage data were obtained and emission estimates were made by simply multiplying the quantities used by the appropriate emission factor for each chemical; Table 17 presents these fine data.

Table 17. AGRICULTURAL USE OF DEFOLIANTS AND DESICCANTS IN ARIZONA, 1971[47]

Material	Quantity used, kg	(lb)
Arsenic acid	27.9×10^3	(61.5×10^3)
DEF and Folex	49.4×10^3	(108.9×10^3)
Chlorates and borates	744.9×10^3	$(1,642.4 \times 10^3)$
Paraquat	12.6×10^3	(27.7×10^3)

Courtesy of G. W. Ware, C. H. Kreader, L. Moore, Progressive Agriculture, and the University of Arizona.

Applications of harvest-aid chemicals were assumed to occur only once, although multiple applications are known to occur, and mixtures of the chemicals are sometimes applied (e.g., small amounts of paraquat added to DEF formulations). Only California (0.8%), Mississippi (0.5%), and Texas (2.2%) have farms that reported[43] treating crops with defoliants three or more times. Since it was impossible to obtain data on the use of mixtures, such use was taken to be negligible.

Emission estimates for cotton defoliants and desiccants by states and for the U.S. are shown in Table 18. Texas was the largest contributor to arsenic acid emissions (96.1%) since its use is predominant there; Arkansas (21.7%) and Mississippi (29.2%) were the largest contributors to national

[47]Ware, G. W., C. H. Kreader, and L. Moore. Agricultural Use of Pesticides in Arizona. Progressive Agriculture. University of Arizona. Tucson. July-August 1974. p. 12-13, 16.

Table 18. EMISSION ESTIMATES FOR COTTON DEFOLIANTS AND DESICCANTS BY STATE AND NATIONWIDE, 1971

State	Arsenic acid, kg	(lb)	DEF or Folex, kg	(lb)	Sodium chlorate, kg	(lb)	Paraquat, kg	(lb)
Alabama	49	(107)	2,301	(5,074)				
Arizona	170	(375)	494	(1,089)	5,272	(11,624)	126	(277)
Arkansas			4,963	(10,943)	478	(1,054)		
California			670	(1,477)	25,597	(56,441)		
Florida			59	(131)				
Georgia	40	(89)	1,908	(4,208)				
Kentucky			6	(14)				
Louisiana			1,935	(4,266)	186	(411)		
Mississippi			6,677	(14,723)	643	(1,417)		
Missouri			459	(1,013)	229	(505)		
New Mexico	10	(22)	15	(34)				
North Carolina			496	(1,094)	51	(112)		
Oklahoma	352	(776)	31	(69)	83	(184)		
South Carolina	37	(81)	1,721	(3,795)				
Tennessee			554	(1,221)	57	(125)		
Texas	16,171	(35,656)	574	(1,266)	405	(892)	1,264	(2,787)
TOTALS	16,829	(37,108)	22,865	(50,417)	33,000	(72,765)	1,390	(3,064)

Note: Blanks indicate values are negligible.

DEF emissions; California had the largest amount of sodium chlorate emissions (77.6%); and nearly all of the paraquat used for cotton desiccation was used in Texas.

That the accuracy of the emission estimates is questionable can be demonstrated by the following anomaly in defoliant usage data. The estimated defoliant usage for Washington, Bolivar, and Sunflower counties in Mississippi (which contain 34% of the state's cotton acreage) has been reported;[34] the use of defoliants in those countries was 76% to 96% sodium chlorate, the remainder was DEF. In Table 15 the estimated defoliant use was 90% DEF and the remainder was sodium chlorate, for Mississippi and other states. Clearly, the choice of which data to believe can affect estimates greatly.

SECTION V

CONTROL TECHNOLOGY

A. STATE OF THE ART

In general, drift hazard can be reduced by increasing the droplet size of agricultural sprays, but if coverage is also an important factor, it may then be necessary to increase the total volume applied per unit area. Major efforts to reduce drift hazard by reducing the number of fine drops for a given application have utilized one of the following approaches:

- Production of a more uniform droplet size -- attempts have been made to improve the uniformity by altering the liquid properties as well as by changing nozzle design and operating conditions. This would allow the mean diameter to be maintained; although a perfectly uniform spray may not be desired, a major reduction in the number of fine drops would reduce the drift and would probably improve coverage efficacy, resulting in a lower application rate.
- Removal of the fine droplets -- this approach utilizes present types of atomization equipment and liquids but attempts to remove the fine drops by coalescence or by physical forces.
- Increase in the drop size spectrum -- use of larger drop size spectra generally results in a reduction in the number of fine drops that may drift. In this case the total applied volume may need to be increased to maintain satisfactory coverage.[7]

Various methods of controlling drop size, proper timing of application, and modification of equipment are practices which can reduce drift hazards; they are discussed below.

1. Fluid Additives

One possible avenue for reducing drift from spray applications is the use of adjuvants that alter the physical properties of the fluid. Some physical properties can affect the basic atomization process and thereby reduce the number of fine drops (less than 100 μm). Several commercial adjuvants or formulations have been introduced that have a marked effect on the viscosity, surface tension, and/or viscoelastic properties of the fluid. However, few data are available on the effectiveness of different adjuvant properties for reducing drift under various field conditions.[48]

One method of increasing viscosity is the use of a water-in-oil or "inverted" emulsion. Such inverts have been shown to reduce drift under many conditions for insecticidal sprays, but they may be limited to use with phenoxy-acid herbicides where good coverage is not necessary. They also have the disadvantages of being unstable, of shifting rather than narrowing the drop spectrum, and of increasing the phytotoxicity of the emulsion. Economically, they compare favorably with other spray thickeners available, but present more of a logistics problem.[49]

There are many materials that increase the apparent viscosity of sprays and, hence, reduce drift when properly added to the mixture. Some of the materials that have recently been

---

[48]Yates, W. E., N. B. Akesson, and D. Bayer. Effects of Spray Adjuvants on Drift Hazards. (Paper No. 74-1008, presented at the 1974 Annual Meeting, American Society of Agricultural Engineers. Stillwater, Oklahoma. June 23-26, 1974.) 26 p.

[49]Butler, B. J., N. B. Akesson, and W. E. Yates. Use of Spray Adjuvants to Reduce Drift. Transactions of the American Society of Agricultural Engineers. 12(2):182-186, 1969.

introduced are: Dacagin, a mixture of natural carbohydrates[50] (Diamond Shamrock); Norbak, a crosslinked polyacrylate[50] (Dow); Vistik, a hydroxyethyl-cellulose[50] (Hercules); Nalcotrol, a polyvinyl polymer[48] (Nalco Chemical); and Cab-O-Sil, a submicroscopic fumed silica (Cabot Corp.). These can all be added to water-based sprays, and have been used almost exclusively with herbicides.[49]

These materials require care in mixing, and it is known that Dacagin, Norbak, and Vistik lose viscosity with increasing concentrations of salt. This means that changes in water source, pesticide-water ratios, and pesticide types will change viscosities. Therefore, consistency checks in the field are desirable, with the amount of adjuvant used being changed accordingly. The mixtures require time to increase in viscosity, so waiting times of at least 20 minutes before application are necessary, and longer in cooler weather.[49]

Water-based sprays are normally quite similar to water in viscosity, and are Newtonian in their reaction to the increasing shear rates encountered during passage through a spraying system. The materials mentioned above are non-Newtonian and pseudoplastic in their behavior. This tendency to decreasing viscosity with increasing shear rate requires the use of a highly viscous liquid in the spray tank, in order that the liquid emitting from the nozzle will be a few times more viscous than water.

In a typical spray system, shear rates are usually less than 50 s^{-1} in the tank, 500 to 1,000 s^{-1} in the lines, and 10,000 to 200,000 s^{-1} at the nozzle. The range in the

---

[50]Kanellopoulos, A. G. Additives in Herbicide Formulations. Chemistry and Industry (London). 1974(9):951-955, December 7, 1974.

amount of adjuvant used, then, is limited on one end by the ability of the system to move the highly viscous fluid from the tank, and on the other by the need for high viscosities at the nozzle to eliminate fine droplets.[49]

Other problems include the fact that the high air shear on aircraft operated above 27 m/s (60 mph), even when nozzles are directed with the slipstream, causes breakup of the large drops: on ground equipment this is not a problem. Recirculating the liquid through pumps can cause reduced function of the viscous effect, also.[51]

Field tests have shown that, in addition to reducing drift, Dacagin acts as a "sticker" material when added to a defoliant spray of DEF and applied aerially. Tests with varying amounts of adjuvant resulted in an 8% to 20% heavier leaf drop.[52]

Other field experiments were conducted with several adjuvants to determine their effects on drift. In one comparison, Dacagin, Cab-O-Sil, and blackstrap molasses were added to an aerial pesticide spray.[40] All three decreased the downwind drift; Cab-O-Sil was the most effective. Other researchers compared fallout and air samples downwind from aerial applications of sprays containing an oil-water emulsion, a mixture with Nalcotrol, and a mixture containing an experimental hydroxyethyl cellulose buffer system called HEC/B (probably similar to Vistik) for three types of atomization.[48] When compared to the standard oil-water emulsion application, each of the thickening adjuvants tested reduced the amount of drift collected by the air samplers at all downwind stations.

---

[51]Akesson, N. B., W. E. Yates, and R. E. Cowden. What's Happening in Aerial Application Research. Unpublished paper. Agricultural Engineering Department, University of California at Davis. 1975.

[52]Dacagin Speeds Cotton Defoliation. Agricultural Chemicals. October 1969. p. 83.

2. Nozzles and Atomizers

Low velocity jets have been introduced as a means of producing a minimum number of fine drops. One approach to satisfactory distribution with jets on a tractor-mounted boom sprayer incorporated jets directed backward, spaced at 63.5-mm (2.5-in.) intervals, operated at 13.8 kPa to 27.6 kPa (2 psi to 4 psi), and vibrated laterally at approximately 540 cycles/min. Following the same approach, but without vibrating the boom, a multijet nozzle was designed with an electrical drive unit for each nozzle that produced a rotary oscillation of 0.436 rad (25°) at 4,000 cycles/min, to be operated with a 41.4-kPa (6-psi) spray pressure.[7]

When using one of the various thickened sprays for reducing drift, the flat fan nozzle has a particular advantage because the discharge coefficient remains nearly constant over a wide range of viscosities.[7]

Field tests with a new type of nozzle, the Raindrop (Delavan Manufacturing Co.), indicated that the spray measured as downwind drift was reduced by approximately one-half that resulting from applications with flooding, flat, or cone nozzles under identical operating conditions.[12]

Conclusions drawn from the results of another drift study conducted with a ground machine in the field were that lowering the nozzle height decreased downwind drift deposits and lowering the nozzle pressure decreased the spray loss.[53]

---

[53]Goering, C. E., and B. J. Butler. Paired Field Studies of Herbicide Drift. (Paper No. 73-1575, presented at 1973 Winter Meeting, American Society of Agricultural Engineers. Chicago. December 11-14, 1973.) 22 p.

3. Equipment Modification

Ideally, the use of ground equipment instead of aircraft for spray applications would reduce drift for cotton defoliation, especially since ground operated air-carrier systems are not needed. However, use of ground equipment is usually prohibited by field conditions such as recent irrigation, height or maturity of crop, lodging, broadcast or narrow-row planting, and shortage of trained labor. It thus becomes necessary to rely on aerial application. The utilization of nozzles that minimize fine drops and the orientation of the nozzle backwards into the airstream help achieve greater on-target deposits and reduced drift.

In studies of the air wake pattern from low-flying aircraft it was observed that the fine spray droplets in the vicinity of the wing tip were lifted high into the air to be carried by whatever winds or thermal lifts existed. Because the wing generates the wake, it was found that placing the boom away from the wing reduced the movement of droplets to wing vortices.[54]

For ground machines, less drift can be achieved by using a spectrum of large droplets and high volume application, and by confining the spray closer to the target area. Hoods or shields have been introduced to further reduce the drift for specific hazardous applications. A simple deflector to confine the trajectories[11] and the use of an inflatable rubber boom cover showed that drift was not eliminated, but under strong winds, 4.0 m/s to 7.6 m/s (9 mph to 17 mph), it was reduced by 53% to 89%.[7]

---

[54]Schultz, H. B., N. B. Akesson, W. E. Yates, and K. H. Ingrebretsen. Drift of 2,4-D Applied by Plane. California Agriculture. 10(8):4-5,14, August 1956.

4. Meteorological Timing

Loss of a defoliant chemical by drift is, among other things, a loss of application efficiency. Applications that are poorly timed or carelessly made during the "rush of the season" are most likely to result in higher drift losses which, in turn, generate the need for higher and more frequent dosages than would be necessary under more efficient methods.[12] Here, the care of the applicator in observing some simple meteorological parameters can minimize drift hazards.

Since off-target drift deposits are greatest under stable, inversion conditions, it has been recommended by researchers that unstable meteorological conditions be chosen as often as possible for aerial spray applications. Field studies have demonstrated that the greatest on-target deposits are achieved in the early morning, followed by midafternoon, then early evening. The same studies showed that drift from morning and afternoon applications was less than that from evening application.[55]

The likelihood of good spraying winds (low velocity) is greater in the early morning hours than in the evening; when this situation is combined with the generally cooler and more humid air conditions at this time of day, which lead to reduced droplet evaporation and hence a reduction in the potential drift fraction, the advantages of morning spraying become obvious.[10]

---

[55]Ware, G. W., B. J. Estesen, W. P. Cahill, and K. R. Frost. Pesticide Drift. VI. Target and Drift Deposits vs. Time of Applications. Journal of Economic Entomology. 65(4):1170-1172, August 1972.

B. FUTURE CONSIDERATIONS

Much research has been directed toward reducing the drift potential of herbicides; with sprays this has been concentrated on increasing the coarseness of particles in the droplet spectrum, controlling distribution of droplet sizes, and increasing carrier viscosity. Additives which are pseudoplastic in behavior and invert emulsions have been studied, and two opposing principles have been encountered. Droplets coarse enough to reduce drift potential are highly desirable; however, generation of very large drops may reduce herbicide effectiveness by unevenly distributing the spray across leaves. The optimum relationship would be the application of uniform droplets of adequate coarseness to reduce spray drift without reducing herbicide or defoliant effectiveness. Presented below are some new developments which may achieve increased effectiveness and reduce losses to the atmosphere simultaneously.

1. Foam Spray Systems

Foam additives are the newest addition to the viscosity-changing and sticking agent materials. Foam is a mixture of liquids (adjuvant-aqueous phase) and gas (usually air) with physical properties different from those of the original constituents. Foams have potential for agricultural use as evaporation suppressants, frost protection agents, soil amendments, and pesticide carriers. They have been considered as potential drift reduction agents because they can control droplet coarseness.[56]

---

[56]Scifres, C. J., H. G. McCall, and D. W. Fryear. Foam Systems as Herbicide Carriers for Range Improvement. Texas Agricultural Experiment Station. Miscellaneous Publication 1974. 18 p.

Present research indicates that foams have most of the desirable characteristics and at least one of the undesirable characteristics of thickeners. If drift reduction is to be attained spray particles must be made large; small drops must not be formed individually or allowed to disengage from the larger foam clusters. When a foam is generated, it produces a size range of bubbles which are held together by the foaming agent in clusters of globules. As long as the foam agent holds these together, little drift loss can occur. But if the cluster should shed the small bubbles, as is possible during aircraft application, drift losses can occur.

Because varying amounts of foam agent in a given mixture produce varying degrees of bubble size, liquid content, and stickiness or tenacity, further research is needed to specifically evaluate the use of these three parameters as potentials for drift reduction. If the amount of liquid or air in each bubble is controllable, it could be adjusted to control drop density and total amount of liquid applied. Thus, the problem of having large drops with poor coverage might be resolved by making the drops hollow, and the liquid volume could then be reduced.[57]

Various types and designs of foam generators have been introduced. Although these generators vary in construction, several components are common to all: a nozzle body, an orifice, and a chamber for foam formation (Figure 5). Some generator types employ a detachable nozzle tip, whereas the delivery port is constructed as part of the nozzle in others. The greatest variation among generators is in the design of the foam generator body. All are hollow tubes with a number

[57]Akesson, N. B., S. E. Wilce, and W. E. Yates. Confining Aerial Applications to Treated Fields -- A Realistic Goal. Agrichemical Age. December 1971. p. 11-14.

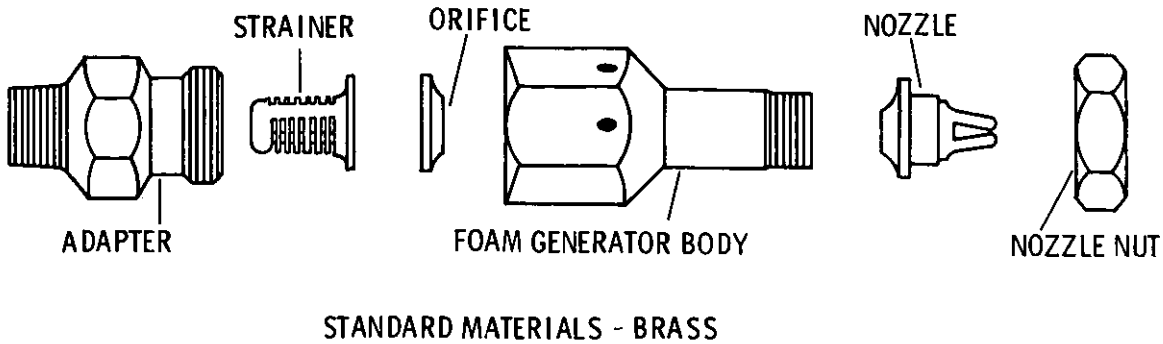

Figure 5. Component parts of foam generators which mix air and liquid to form foam[56]

of air inlet ports on the side; however, there are many differences in size, number, location, and arrangement of the ports and in size of the generator bodies. Plastic, brass, and aluminum are used for construction.[56]

Experiments with foaming in a cotton defoliation program resulted in improved visibility of the spray swath and cleaner equipment but did not change the effectiveness of defoliation from that provided by the conventional spray method. Drift reduction was not studied. However, the ability to see the areas where spray has been applied (thereby reducing overlapping), better coverage of the plants from the action of the spray adjuvant, and cleaner equipment because of the flushing action of the foaming agent can all contribute to reduced total applications and more constant droplet size ranges, which will reduce drift emissions.[58]

---

[58]Threadgill, E. D., and R. F. Colwick, Ground Applications of Cotton Defoliants with Air Aspirating Nozzles. In: Proceedings of the 27th Annual Beltwide Cotton Defoliation and Physiology Conference. Phoenix. January 9-10, 1973. p. 35.

Field studies on the drift reduction effectiveness of foam systems were conducted for both aerial and ground equipment. Results gave little indication of reduced drift potential for aerial sprays, but ground equipment runs indicated great potential. It was postulated that air injected into the foam generator changed particle densities to the extent that flotation occurred, and potential for displacement increased.[56]

2. Microfoil®

Mechanically induced, constant droplet size sprays are possible using the commercially available multiple hypodermic needle Microfoil boom (Amchem Corp.) shown in Figure 6.[59] The unit contains 3,120 capillary tubes on a 7.9-m (26-ft) boom. Presently two sizes are available, 0.33 mm (0.013 in.) and 0.71 mm (0.028 in.) in inside diameter, that are operated at 14 kPa (2 psi) or less.[7] This is as close to total drift control as is presently possible with an estimated 98% to 99% recovery of spray in the applied swath. However, the Microfoil cannot be used on aircraft at speeds greater than 26.8 m/s (60 mph), which limits it to helicopter operation or ground rig use.[57]

Table 19 shows the drop sizes produced by a variety of atomizers. These range from completely airborne aerosols with a volume median diameter (vmd) of 11 μm to the Microfoil which produces about 99% of the drops in the 900-μm size with only about 0.001% below 220 μm.

---

[59]Brazelton, R. W. Control of Chemical Drift. University of California, Agricultural Extension. Bulletin No. OSA #n5. July 1971. 2 p.

Table 19. TYPICAL DROP SIZE DISTRIBUTION, CUMULATIVE PERCENT BY VOLUME BELOW SIZES SHOWN[51]

Drop size, µm	Fine aerosols	Coarse aerosols	Fine sprays	Medium sprays	Coarse sprays	Very coarse sprays	Microfoil
1-5	5	0.1					
5-10	45	0.4	0.1				
11-µm vmd[a]	50						
10-15	77	2.0					
15-20	97		2				
20-40	100	12		0.1			
40-60		35	5	2	0.01	0.001	
60-80							
86-µm vmd		50					
80-100		59	15.8	6	0.1		
100-120							
120-140					0.4	0.1	
130-µm vmd			50				
140-180		100					
180-200			81	17	3		0.001
200-220							
220-240					7	5	
240-260							
260-280							
280-300			100	46	14		0.01
278-µm vmd				50			
300-350					24		
350-400					36	15	0.1
400-450					46		
460-µm vmd					50		
450-500				92	55		
500-600					74	25	
600-700					88		
700-800					96		1
900-µm vmd						50	98.88
800-1000				100	100	100	100
vmd	11 µm	86 µm	130 µm	278 µm	460 µm	900 µm	
Nozzle type	Cold fogger, 34.5 kPa (5 psi) air and liquid	2-Fluid, 206.8 kPa (30 psi) air, 34.5 kPa (5 psi) liquid	Spinner, in 40-45 m/s (90-100 mph) airstream	65015 Fan, 275.8 kPa (40 psi) liquid pressure at 1.57 rad (90°) back, 40-45 m/s airstream	D6-46 Cone, 344.7 kPa (50 psi) liquid pressure, 40-45 m/s airstream	D6 Jet back. 275.8 kPa (40 psi) liquid pressure, 40-45 m/s airstream	Under 27 m/s (60 mph) with airstream

[a]The vmd or volume median diameter is that size of drop which divides the total volume of drops found exactly in half; that is, 50% of the volume is in drops above that size and 50% are below the vmd size. The size is measured in microns (µm).

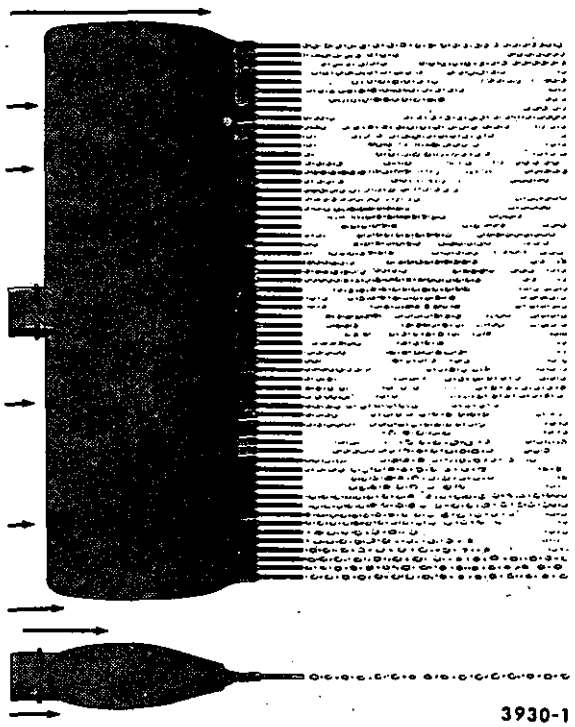

Figure 6. Representation of the Microfoil used on helicopters at 26.8 m/s airspeed or less producing 800-μm to 1,000-μm drops[59]

3. Thermal Defoliation

A completely different concept for defoliating or desiccating cotton has been undergoing research in Oklahoma, where agricultural engineers have been designing a machine to thermally defoliate cotton. An acceptable machine for applying heat to field crops has been developed and has gone through several improvements and changes.

A two-row machine provides controlled airflow rates to maintain close control over the application temperatures of 422°K to 588°K (300°F to 600°F) caused by fueling LP gas. The unit consists essentially of two 2.7-m (9-ft) tandem units with a 0.3-m (1-ft) space between them, resulting in an overall heat

unit 5.7 m (19 ft) in length, as shown in Figure 7. Spring-loaded doors are positioned in front and behind the 5.7-m unit or oven to enclose the heated air. The unit is attached to a Hi-tractor propelling unit.[60]

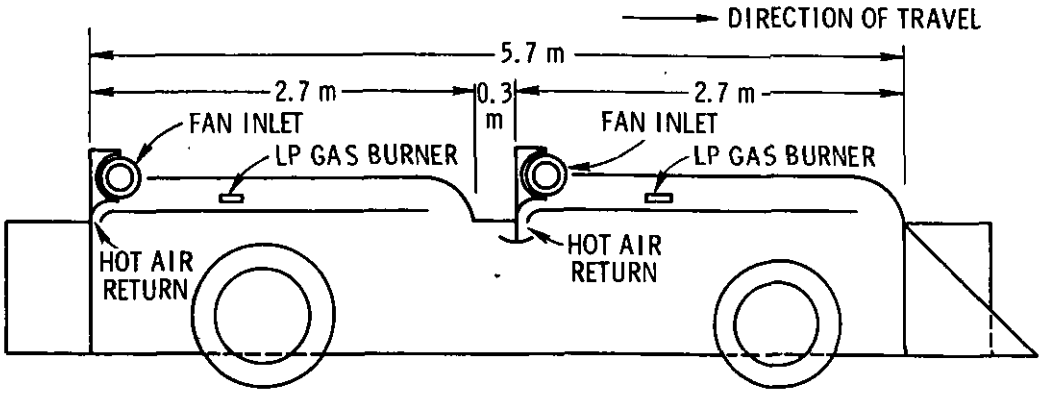

Figure 7. Schematic of 1970 thermal defoliator[60]

Basic relationships to cause defoliation have been developed. If a certain exposure time of the plants to a particular temperature resulted in defoliation, increasing either the exposure time or the temperature would be a more severe treatment resulting in desiccation of the cotton instead of defoliation. Three years' data were used to develop formulas related to leaf drop and leaf kill:[60]

$$\text{Leaf drop } (\%) = -19.29 + 13.65x_1 + 0.11x_2 - 0.01x_1x_2 \quad (5)$$

$$\text{Leaf kill } (\%) = -29.96 + 13.81x_1 + 0.14x_2 - 0.01x_1x_2 \quad (6)$$

where x_1 = time of exposure = length of defoliator times forward speed, s ($1.2 \leq x_1 \leq 5.5$)

x_2 = temperature, °F ($200 \leq x_2 \leq 700$) (nonmetric units used by Reference 60)

---

[60]Batchelder, D. G., J. G. Porterfield, and G. McLaughlin. Thermal Defoliation of Cotton. In: Proceedings of the 25th Annual Beltwide Cotton Defoliation and Physiology Conference. Atlanta. January 12-13, 1971. p. 36-37.

A thermal defoliator owned by the Natural Gas Processors Association was tested during the 1969 harvest season in the lower Rio Grande Valley of Texas in July, continued in Mississippi in September, and finished in Oklahoma in October. At all locations, comparisons were made between chemical and thermal defoliation, and cotton was subjected to fiber analysis in addition to grade, staple, and micronaire. There was a slightly higher net lint value for the thermally defoliated cotton which indicated essentially no difference in fiber quality in favor of either chemical or thermal defoliation.[60]

Cost of the fuel to cause defoliation was calculated to be approximately $405/km^2$ ($1.64/acre). This figure does not include any machinery costs, and is based upon an LP gas estimate of $31.70/m^3$ (12¢/gal), a January 1971 quote for fuel bought in 1,000-gal quantities. A cost of $1.64/acre to cause thermal defoliation was believed to be competitive with chemicals for defoliation.[60]

In summary, thermal defoliation is believed to offer several advantages for cotton as compared to chemical defoliation: (1) costs are competitive, (2) thermal defoliation is positive and is not affected by subsequent weather (no secondary applications), (3) new and regrowth leaves are particularly sensitive to thermal application, (4) thermal defoliation does not result in changes in fiber properties if properly applied, and (5) thermal defoliation does not result in any residue or drift problems.[60]

SECTION VI

GROWTH AND NATURE OF THE INDUSTRY

A. PRESENT AND EMERGING TECHNOLOGY

Any changes in technology in cotton defoliation and desiccation, other than a major equipment technology transfer such as introduction of thermal defoliators, will occur in the usage of new and different harvest-aid chemicals.

The chemical industry will be required to establish tolerances, through feeding and toxicology studies, for all of the currently available harvest-aid chemicals whose tolerances are unknown. If this is not done, the cotton industry will have only three chemicals available for this type of use: Folex for defoliation, and arsenic acid and paraquat for desiccation.[61]

The use of cacodylic acid and sodium cacodylate (Bollseye) has been increasing in recent years as a substitute for arsenic acid.[24,25] The cacodylates are arsenic-based compounds similar in structure to arsenic acid but with LD_{50}'s (oral, male rat) ten times higher; they are thus much less toxic. Usage of cacodylic acid (dimethylarsenic acid) in Arizona, which has the most complete pesticide usage figures,

---

[61] Cotton Growers Spent $60 Million for Herbicide in '66, Shaw Tells Cotton Mech Conference. Farm Chemicals. 130(2):80-82, February 1967.

has risen from 3.17 metric tons and 1.86 metric tons in 1970 and 1971, respectively, to 10.9 metric tons and 31.6 metric tons in 1972 and 1973, respectively. Meanwhile, arsenic acid use declined 29.8 metric tons from 1970 to 1973.[47]

New patented chemicals for cotton harvest-aid utilization include cis-2,3,5,5,5-pentachloro-4-keto-2-pentanoic acid,[62] 3-amino-3-carboxypropylmethylsulfoximine salts,[63] derivatives of dialkyl arsinic acids, $OAs(R)(R')(OR^2)$, where R and R' are C_{1-4} alkyl and R^2 is H, NH_4, Na, etc.,[64] and substituted triphenyl phosphates and phosphites.[65]

The discovery of the plant hormone abscisin II has been heralded as a step forward. In cotton, abscisin II causes leaf or flower shed. It might be usable as a biological defoliant that would be effective in all weather conditions and on all stages of plant maturity. Unfortunately, it took about 225 kg (500 lb) of cotton bolls to isolate and crystallize a minute amount of abscisin II (9 mg).[61,66]

---

[62]Erby, W. A., W. E. Erner, J. S. Skaptason, and R. A. Walde. Defoliation and Desiccation of Cotton with cis-2,3,5,5,5-Pentachloro-4-keto-2-pentanoic Acid. U.S. Patent 3,472,004 (to Air Products and Chemicals, Inc.), October 14, 1969.

[63]Walworth, B. L. 3-Amino-3-carboxypropylmethylsulfoximine Salts as Nonselective Water-Soluble Defoliants. U.S. Patent 3,323,895 (to American Cyanamid Co.), June 6, 1967.

[64]Neuville, M. L., and R. B. Carroll. Cacodylic Acid Plant Defoliants. U.S. Patent 3,378,364 (to Ansul Co.), April 16, 1968.

[65]Hensel, J., and D. W. Gier. Defoliating and Desiccating Plants with Substituted Triphenyl Phosphates and Phosphites. U.S. Patent 3,416,911 (to Chemagro Corp.), December 17, 1968.

[66]A Natural Defoliant. Agricultural Research. 14(5):11, November 1965.

One of the chief problems of defoliation is the waiting period of 5 to 14 days after application for completion of the defoliation action. Thus, the management aspects of conventional defoliation and harvesting procedures are made difficult by unpredictable weather conditions between the time the chemical is applied and the time of harvest. The effects of defoliants, in certain cases, can be totally offset by rapid production of new-growth leaves if rains occur between application and harvest.[67]

Another possible chemical change could be the introduction of wilting agents, such as neodecanoic acid, instead of defoliants. A new system or technique has been investigated in which the mechanical picking was done while the leaves were in a chemically wilted condition and still attached to the plant. This system was given the name, "wilt-harvest."[67]

The wilted condition is produced by a wiltant -- a chemical that causes rapid wilting of the leaf blades within a few hours of application. The action on the blades is similar to that of a desiccant; however, the leaf petioles are not injured by the wiltant. Therefore, the leaves will defoliate in the same manner as with conventional chemical defoliants, given enough time.[67]

The principal objective of the new approach is to provide more precise control over the harvesting operations during the early part of the season. The development of a successful wiltant will provide a means by which the producers can utilize the more accurate short-range weather forecasts and

---

[67]Miller, C. S., L. H. Wilkes, E. L. Thaxton, and J. L. Hubbard. Cotton Wilt-Harvest and Wiltant Defoliation Effectiveness in Texas. Texas Agricultural Experiment Station. Miscellaneous Publication No. MP-1010. October 1971. 12 p.

harvest within a matter of hours (3 to 48) after chemical treatment. It is predicted that the maximum benefit will be achieved where smaller acreages are treated in advance of the pickers to take advantage of harvesting while the leaves are in the proper condition.[67]

The defoliant action of a 30% formulation of neodecanoic acid compared favorably to that of other commercial defoliants, which indicates that a conventional defoliation picking may be made in case the wilt-harvest picking is not properly timed.[67]

B. INDUSTRY PRODUCTION TRENDS

Little, if any, growth is forecast for the amount of area to be planted in cotton in the near future (to 1978). This is due to strong competition from foreign growers and from synthetic fiber producers. Figure 8[68] and Table 20 illustrate the historical variability of U.S. cotton acreage harvested, which is returning from the disastrous years of 1966-67 to a more stable position.

The extent of harvest-aid chemical use has remained constant since becoming widespread in 1960, and is illustrated in Table 21. Emissions are proportional to acreage harvested and extent of chemical use, so emissions from agricultural spraying of cotton defoliants and desiccants are expected to remain constant (1972 to 1978).

---

[68] 1973 Handbook of Agricultural Charts. Washington, U.S. Department of Agriculture, October 1973.

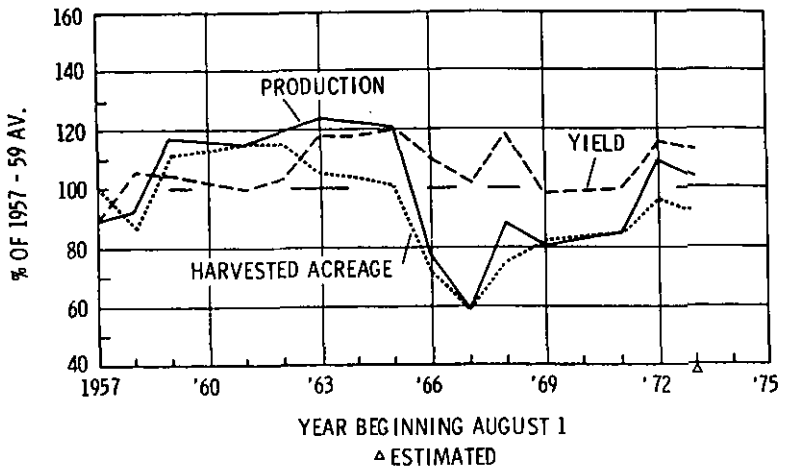

Figure 8. U.S. cotton acreage, yield, and production[68]

Table 20. U.S. COTTON ACREAGE, YIELD, AND PRODUCTION, 1947-73[68]

Year	Harvested acreage, 1,000 km^2	(1,000 acres)	Year	Harvested acreage, 1,000 km^2	(1,000 acres)
1947	86.3	(21,330)	1961	63.3	(15,634)
1948	92.7	(22,911)	1962	63.0	(15,569)
1949	111.0	(27,439)	1963	57.5	(14,212)
1950	72.2	(17,843)	1964	56.9	(14,057)
1951	109.1	(26,949)	1965	55.1	(13,615)
1952	104.9	(25,921)	1966	38.7	(9,552)
1953	98.5	(24,341)	1967	32.4	(7,997)
1954	77.9	(19,251)	1968	41.1	(10,160)
1955	68.5	(16,928)	1969	44.7	(11,055)
1956	63.2	(15,615)	1970	45.1	(11,155)
1957	54.9	(13,558)	1971	46.4	(11,471)
1958	48.0	(11,849)	1972	52.5	(12,984)
1959	61.2	(15,117)	1973[a]	50.2	(12,406)
1960	62.0	(15,309)			

[a]Preliminary. August 1 estimate.

Table 21. CHANGES IN USE OF HARVEST-AID CHEMICALS FOR COTTON

Year	Total area treated, km^2 (1,000 acres)		Total area harvested,[68] km^2 (1,000 acres)		Percent treated
1952	10,161	(2,510.8)[69]	104,900	(25,921)	9.7
1955	11,946	(2,951.9)[69]	66,584	(16,453)	17.9
1958	19,012	(4,697.9)[69]	47,814	(11,815)	39.8
1960	29,046	(7,177.3)[69]	61,735	(15,255)	47.0
1964	17,191	(4,248.0)[70]	56,887	(14,057)	30.2
1971	22,642	(5,595.0)[45]	46,422	(11,471)	48.8

[69]Saunders, J. M., and H. R. Carns. The Usage of Harvest-Aid Chemicals, 1952-1960. In: Proceedings of the 16th Annual Beltwide Cotton Defoliation and Physiology Conference. Memphis. January 9-10, 1962. p. 8-12.

[70]Eichers, T., P. A. Andrilenas, R. Jenkins, and A. Fox. Quantities of Pesticides Used by Farmers in 1964. U.S. Department of Agriculture. Washington. Agricultural Economic Report No. 131. January 1968. 37 p.

SECTION VII

APPENDIXES

A Derivation of Source Severity and Input Data

B Preliminary Air Sampling of Cotton Desiccation

C Method for Estimating TLV Values for Compounds When None Exists

APPENDIX A

DERIVATION OF SOURCE SEVERITY AND INPUT DATA

1. DEFINITION OF SOURCE SEVERITY

The behavior of emission "plumes" from agricultural spraying operations is different from that of plumes from elevated stacks in the following respects: (1) the emissions from a spray run are a ground level line source rather than an elevated point source; and (2) the emissions are instantaneous and intermittent rather than continuous. Because of these differences, the source severity, S, used to indicate the hazard potential of an emission source cannot be used "as is" for comparison purposes in this case. The source severity, S, is defined as:

$$S = \frac{\overline{\chi}_{max}}{F} \qquad \text{(A-1)}$$

where $\overline{\chi}_{max}$ is the time-averaged maximum ground level concentration of each pollutant emitted from a continuous near-point source, and F is the primary ambient air quality standard for criteria pollutants and is a "corrected" threshold limit value (i.e., TLV · 8/24 · 1/100) for noncriteria pollutants.

An alternative source severity to be used for the special case of agricultural field spraying shall be defined (Equation 1) as:

$$S_A = \frac{\bar{\chi}}{F_A}$$

where $\bar{\chi}$ is the average ground level concentration during spraying at the field perimeter (where maximum exposure to a population exists), and F_A is a "corrected" threshold limit value (i.e., TLV · 1/100).

The source severity as given in Equation A-1 was developed on the basis of the ratio of the dose of the pollutant delivered to a population relative to some potentially hazardous dose for a specific time of interest.[71] For criteria pollutants the potentially hazardous dose is the primary ambient air quality standard times the appropriate averaging time. The dose delivered is, then, the concentration maximum times the same averaging time. Application of chemicals to a field crop occurs in a time period of 8 hours or less and dose from airborne drift from the application is consequently 8 hours or less.

The hazard factor, F, in Equation A-1 was used for noncriteria pollutants to compensate for the fact that TLV's were established for an 8-hr/day, 5-day work week exposure, and that the general population is a higher risk group than healthy workers. Hence, the multiplication by 8/24 corrects for continuous exposure and the multiplication by 1/100 is a safety factor. In the alternative hazard factor, F_A, there

[71]Eimutis, E. C. Source Assessment: Prioritization of Stationary Air Pollution Sources, Model Description. Monsanto Research Corporation. Dayton. Report No. MRC-DA-508. Environmental Protection Agency, EPA-600/2-76-032a. February 1976. 77 p.

is no need to correct for continuous exposure since it does not apply to this case, but the safety factor of 1/100 is retained because it does apply to risk to the general population.

Determining the ground level concentration, $\overline{\chi}$, during spraying requires the use of a dispersion model. The source severity, S, used the Gaussian plume equation for maximum ground level concentration as emitted by a continuous, elevated point source:[72]

$$\chi_{max} = \frac{2Q}{\pi euh^2} \qquad \text{(A-2)}$$

where Q = emission rate
u = wind speed
h = effective emission height
π = 3.14
e = 2.72

For the case of an agricultural spraying operation the "plume" emitted can be assumed to be an instantaneous line source. The Gaussian dispersion model which describes this is:[72]

$$\chi = \frac{Q_L}{\pi\sigma_{xI}\sigma_{zI}} \exp\left[-\frac{1}{2}\left(\frac{x-uT}{\sigma_{xI}}\right)^2\right] \exp\left[-\frac{1}{2}\left(\frac{h}{\sigma_{zI}}\right)^2\right] \qquad \text{(A-3)}$$

where Q_L is the total amount of material emitted per unit length from a line source, and σ_{xI} and σ_{zI} are the standard deviations of the distribution of material in a puff in the x- and z-directions, respectively. The above equation describes emissions from only one spraying pass with respect to

[72]Meteorology and Atomic Energy 1969. Slade, D. H. (ed.). U.S. Atomic Energy Commission. (NTIS TID-24190). July 1968. 445 p.

time. The maximum ground level concentration at distance x occurs at the second at which T = x/u, which causes the exponential term containing time, T, to be unity.

The problem in using Equation A-3 is that in actual spraying numerous passes are made, each one at a different distance from the receptor at field's edge. A simpler form of the same model uses the exposure or dosage from an instantaneous line source:[72]

$$D_L = \left(\frac{2}{\pi}\right)^{1/2} \frac{Q_L}{\sigma_{zI} u} \exp\left[-\frac{1}{2}\left(\frac{h}{\sigma_{zI}}\right)^2\right] \qquad \text{(A-4)}$$

where D_L is the dosage from the line puff, or concentration, multiplied by time. If the time of emitting is known or estimated, then the average concentration during that time can be computed. The standard deviation of the distribution of material in the vertical direction can be estimated from power law functions of downwind distance. For neutral atmospheric stability:[72]

$$\sigma_{zI} = 0.15x^{0.70} \qquad \text{(A-5)}$$

An idealized representation of the method used to calculate $\bar{\chi}$ is shown in Figure A-1. A square field with sides of length B is aligned orthogonally to the wind. The spraying swath is in the center of the field perpendicular to the wind direction and at a distance D $(=\frac{B}{2})$ from the receptor, or affected population. The following simplifying assumptions are made:

- The average distance of swaths to receptor is taken to be D = B/2, or, every swath is made in the center of the field.
- The emission from n swaths of Q_L each is taken to be n Q_L. This is emitted from one swath at distance D from the receptor.

- The total time, t, of dosage from emissions is taken to be the total spraying time plus the time needed for turning the spray equipment.
- U.S. average meteorological conditions prevail (u = 4.47 m/s, neutral stability).
- The effective height of emission is negligible (h = 0).

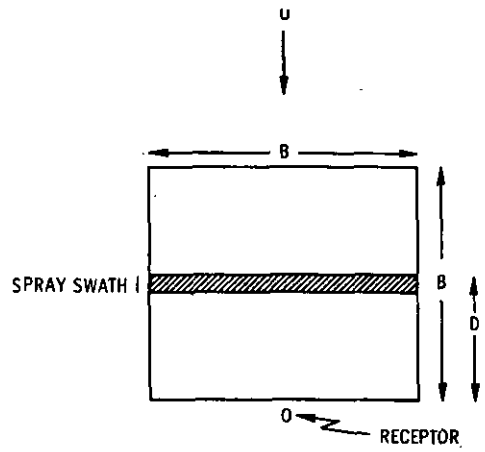

Figure A-1. Representative field for agricultural spraying

The total dosage due to this instantaneous line source, nD_L, is then:

$$nD_L = \bar{\chi}t = \left(\frac{2}{\pi}\right)^{1/2} \frac{nQ_L}{u\sigma_{zI}} \qquad \text{(A-6)}$$

Substituting for u and σ_{zI},

$$\bar{\chi} = \left(\frac{2}{\pi}\right)^{1/2} \frac{nQ_L}{t \cdot (4.47)(0.15)D^{0.70}} \qquad \text{(A-7)}$$

or

$$\bar{\chi} = \frac{1.19 \cdot n \cdot Q_L}{t \cdot D^{0.70}} \qquad \text{(A-8)}$$

Substituting the above value for $\bar{\chi}$ and the factor TLV · 1/100 for F_A into Equation 1 gives Equation 4:

$$S_A = \frac{119 \cdot n \cdot Q_L}{t \cdot TLV \cdot D^{0.70}}$$

where n = number of passes or swaths made in the representative field

Q_L = emissions in mass/length for a single spray pass

t = time to complete spraying representative field including turning time

TLV = threshold limit value of material being sprayed

D = distance from center of field to field boundary

2. DEFINITION OF REPRESENTATIVE SOURCES

There are three major cotton growing regions in the U.S., each with different climate, soil type, and cotton varieties. Figure 3 shows that these regions can be identified as the Delta belt (encompassing the Mississippi River valley in Arkansas, Mississippi, and Louisiana), the Blacklands belt in Texas (running roughly from Austin to Paris), and the High Plains - Low Rolling Plains belt in Texas (located in and below the panhandle).

Approximately 12,000 km^2 (3 million acres) of cotton are grown and defoliated in the Delta belt, where sodium chlorate and DEF or Folex (tributylphosphorotrithioates) are most commonly used.[34] The Blacklands have about 4,000 km^2 (1 million acres) of cotton which is desiccated, using a ground rig, with arsenic acid.[25] The major part of Texas cotton acreage is on the High Plains centering at Lubbock. Depending on the weather, most of this 12,000 km^2 is not treated for harvest but killed by frost. Approximately 4,000 km^2 plus or minus 4,000 km^2 are normally desiccated by aircraft using mainly paraquat.[25]

From these three cotton producing regions, four representative sources were defined: (1) paraquat application by aircraft in the High Plains of Texas, (2) arsenic acid application by ground rig in the Blacklands of Texas, (3) sodium chlorate application by aircraft in the Delta, and (4) DEF application by aircraft in the Delta.

Representative sizes of cotton farms were determined by analyzing the latest agricultural census data.[43] Total reported acres for the states of Arkansas, Louisiana, Mississippi, and Tennessee divided by the number of farms reporting yields an average-size cotton farm of 0.70 km^2 (173 acres). The acreage of farms reporting represents about 69% of total acreage harvested for these states. The size of the representative cotton farm in the Blacklands area of Texas was determined by dividing the number of farms into the reported cotton acres harvested for the following counties: Bowie, Collin, Hunt, Delta, Dallas, Kaufman, Johnson, Ellis, Hill, Navarro, McClennan, Bell, Falls, Williamson, Milam, Robertson, and Burleson. The representative cotton farm for this region is 0.61 km^2 (150 acres). For the High Plains the following counties were included: Collingsworth, Parmer, Castro, Swisher, Briscoe, Hall, Childress, Bailey, Lamb, Floyd, Motley, Cottle, Hardeman, Wilbarger, Cochran, Hockley, Lubbock, Crosby, Dickens, Yoakum, Terry, Lynn, Garza, Haskell, Gaines, Dawson, Scurry, Fisher, Jones, Martin, Howard, Mitchell, Nolan, and Midland. The representative cotton farm for this region is 1.05 km^2 (260 acres).

3. INPUT DATA FOR CALCULATION OF S_A

The average ground level concentration, $\bar{\chi}$, of pollutants resulting from agricultural pesticide application is described in Section IV.D.2 of this document. The method for estimating TLV's for pollutants which have no established TLV is described in Appendix C. Input data used to calculate the source severity, S_A, for the four representative cotton farms are provided below, based on:

$$\bar{\chi} = \left(\frac{2}{\pi}\right)^{1/2} \frac{Q_L}{u\sigma_{zI}t} \qquad \text{(A-9)}$$

a. Paraquat - Aerial Application

Representative field = 260 acres = 1,052,194 m^2
Assume application swath = 50 ft = 15.24 m
Assume application speed = 80 mph = 35.76 m/s
Area application rate = (15.24)(35.76) = 545 m^2/s
Time of spraying = (1,052,194)/(545) = 1,931 s
t = total application time (add 200% for turning) = 5,793 s

Application rate[30] = 0.5 lb/acre = 0.056 g/m^2

Number of swaths = $\sqrt{1,052,194}/15.24$ = 67
D = distance to receptor = $\sqrt{1,052,194}/2$ = 513 m
TLV of paraquat[29] = 0.0005 g/m^3

$$Q_L = (\text{application rate})(\text{swath})(1.0\%)^a = 8.53 \times 10^{-3}\ g/m$$

$$S_A = \frac{\bar{\chi}}{F_A} = \frac{119 \cdot n \cdot Q_L}{t \cdot TLV \cdot D^{0.70}}$$

Therefore, $$S_A = \frac{(119)(67)(8.53 \times 10^{-3})}{(5,793)(0.0005)(513^{0.70})} = 0.30$$

b. Arsenic Acid - Ground Rig Application

Representative field = 150 acres = 607,035 m^2
Assume application swath = 32.8 ft = 10 m
Assume application speed = 12 mph = 5.36 m/s
Area application rate = (10)(5.36) = 53.6 m^2/s
Time of spraying = (607,035)/(53.6) = 11,325 s
t = total application time (add 10% for turning) = 12,458 s

Application rate[30] = 4.4 lb/acre = 0.49 g/m^2

[a] 1.0% is the amount assumed lost as airborne drift.

Number of swaths = $\sqrt{607,035}/10 = 78$

D = distance to receptor = $\sqrt{607,035}/2 = 390$ m

TLV of arsenic acid = TLV of inorganic arsenic[29] = 0.0005 g/m^3

Amount lost as airborne drift (from Appendix B) = 0.61 ± 0.29%.

$$Q_L = (\text{application rate})(\text{swath})(0.61 \pm 0.29\%)$$
$$= 3.0 \times 10^{-2} \pm 1.4 \times 10^{-2} \text{ g/m}$$

Therefore, $$S_A = \frac{(119)(78)(3.0 \times 10^{-2})}{(12,458)(0.0005)(390^{0.70})} = 0.69 \pm 0.32$$

c. <u>Sodium Chlorate - Aerial Application</u>

Representative field = 173 acres = 700,114 m^2

Assume application swath = 50 ft = 15.24 m

Assume application speed = 80 mph = 35.76 m/s

Area application rate = (15.24)(35.76) = 545 m^2/s

Time of spraying = (700,114)/(545) = 1,285 s

t = total application time (add 200% for turning) = 3,855 s

Application rate[30] = 5.0 lb/acre = 0.56 g/m^2

Number of swaths = $\sqrt{700,114}/15.24 = 55$

D = distance to receptor = $\sqrt{700,114}/2 = 418$ m

TLV of sodium chlorate = $0.0198(LD_{50})^{0.774}$ mg/m^3

Acute oral-rat LD_{50} sodium chlorate[28] = 1,200 mg/kg

TLV = 0.0048 g/m^3

$$Q_L = (\text{application rate})(\text{swath})(1.0\%) = 8.53 \times 10^{-2} \text{ g/m}$$

Therefore, $$S_A = \frac{(119)(55)(8.53 \times 10^{-2})}{(3,855)(0.0048)(418^{0.70})} = 0.44$$

d. <u>DEF - Aerial Application</u>

Representative field = 173 acres = 700,114 m^2

Assume application swath = 50 ft = 15.24 m

Assume application speed = 80 mph = 35.76 m/s

Area application rate = (15.24)(35.76) = 545 m^2/s

Time of spraying = (700,114)/(545) = 1,285 s

t = total application time (add 200%) = 3,855 s

Application rate[30] = 1.5 lb/acre = 0.17 g/m^2

Number of swaths = $\sqrt{700,114}/15.24$ = 55

D = distance to receptor = $\sqrt{700,114}/2$ = 418 m

TLV of DEF = $0.0198(LD_{50})^{0.774}$ mg/m^3

LD_{50} acute oral-rat for DEF[28] = 150 mg/kg

TLV = 0.00096 g/m^3

$$Q_L = (\text{application rate})(\text{swath})(1.0\%) = 2.59 \times 10^{-2} \text{ g/m}$$

Therefore, $$S_A = \frac{(119)(55)(2.59 \times 10^{-2})}{(3,855)(0.00096)(418^{0.70})} = 0.67$$

APPENDIX B

PRELIMINARY AIR SAMPLING OF COTTON DESICCATION[a]

Atmospheric sampling of airborne drift losses due to arsenic acid spraying for cotton desiccation was conducted in the Blacklands area of Texas in late summer of 1975. The purpose of this preliminary sampling effort was to quantify the drift losses, within an order of magnitude, because no prior data existed. Three cotton fields were sampled, each at a different farm, one run per day.

1. MATERIALS AND METHODS

a. Field Descriptions

Field A consisted of two patches of cotton separated by a grass strip. The west (first sprayed) patch was about 0.263 km^2 (65 acres) and the east (second sprayed) was 0.445 km^2 (or 110 acres) in size. Air samplers were located in the grass strip and at the north end of the east patch. Wind prevailed from the southeast.

Field B was 0.065 km^2 (16 acres), ∿200 m x 325 m, with air samplers located at the west end. Wind was from the southeast.

---

[a]Metric or nonmetric units are shown for some calculations in this Appendix, depending on the type of units that were used for the particular data during the preliminary sampling; metric units are provided for calculated results; units used for calculation of drift are immaterial since these results are reported as a percent.

Field C was a 0.16-km^2 (40-acre) patch of cotton, ∿500 m x 325 m, with samplers located at the northeast corner, one set on the north edge and the other on the east edge. Wind prevailed from the south with easterly gusts.

b. Application Equipment

At fields A and B, two John Deere Hi-Boys, each equipped with seven 6.35-mm (1/4-in.) KCL SS5 hollow cone nozzles facing upwards on a boom, applied 0.7 m^3/km^2 (3/4 gal/acre) of Desiccant L-10 (orthoarsenic acid, H_3AsO_4, 75% by weight) mixed with a small amount (0.25%) of surfactant and diluted (93%) with water. Total spray was about 9.05 m^3/km^2 (9.68 gal/acre), with a swath width of 9.14 m (30 ft) at a height of 1.5 m to 1.8 m (5 ft to 6 ft) and a speed of 5.4 m/s (12 mph). Approximately 95 swaths were made during application at field A and approximately 32 swaths were made at field B.

For field C, one John Deere Hi-Boy, equipped with 28 D-4-45 spinner hollow cone nozzles facing down on a boom, applied 0.7 m^3/km^2 (3/4 gal/acre) of Sinergized H-10 (orthoarsenic acid, H_3AsO_4, 75% by weight) mixed (95%) with water at a height of 1.5 m to 1.8 m (5 ft to 6 ft) and a speed of 5.4 m/s (12 mph). Total spray was about 13.6 m^3/km^2 (14.59 gal/acre); no surfactant was added. Swath width was 13.7 m (45 ft), and approximately 22 swaths were made.

c. Meteorological Conditions

Application at field A was begun at 1:43 pm, August 30, 1975, and completed at 4:15 pm. During this time, wind was from the southeast, gusty, 0.89 m/s to 8.9 m/s (2 mph to 20 mph) for the first hour and 0.89 m/s to 3.6 m/s (2 mph to 8 mph) for the remainder of the afternoon. Temperature was 35°C (95°F) and atmospheric stability was class C throughout the sampling period.

At field B, application began at 9:10 am, August 31, 1975, and was completed at 9:30 am. Wind speed was 0 m/s to 1.8 m/s (0 mph to 4 mph) from the southeast, temperature was 29°C (85°F), and atmospheric stability was class B.

Field C application started at 2:23 pm, September 1, 1975, and terminated at 5:00 pm. Wind speed was 0 m/s to 3.1 m/s (0 mph to 7 mph) throughout the afternoon from the south with easterly gusts. Temperature was 38°C (100°F) and stability was class C.

d. Experimental Design

Two off-target collection stations were located downwind from the spraying operations. Six air samplers were operated at each of the stations, two of which were connected in series and operated continuously to determine collection efficiency and total dosage. The remaining four air samplers could be remotely controlled by radio to sample either sequential drift losses or drift from varying distances to the ground sprayers. All samplers were operated at a height of 1.2 m (4 ft).

e. Air Samplers

At each collection station, six Smith-Greenburg impingers were powered by two Gast rotary vane lubricated vacuum pumps (Model 0522-V3-G18D). One pump operated the continuous pair of impingers connected in series, and the other pump operated one of the other four samplers through radio-controlled solenoid valves. The samplers (impingers) were connected to their respective vacuum sources by heavy wall tubing (9.5 mm or 3/8-in. ID). Air flow was measured at the beginning and end of sampling with a water manometer calibrated to the respective manifold orifices. Collection medium in each of the impingers was 1.5×10^{-4} m^3 (150 ml) of 0.1N NaOH solution.

Flow rates were 3.1×10^{-4} m^3/s (0.65 cfm) to 5.0 m^3/s (1.05 cfm). Time of operation for each sampler was recorded. Power for the pumps was provided by a 4-kW portable generator; power for the radio transmitter and receiver was delivered by individual batteries.

At the completion of each sampling period the collection from each impinger was placed in a labeled, wide-mouth pint jar and sealed. Samples were returned to the lab and analyzed within 3 weeks.

f. Sample Analysis

All samples were analyzed by colorimetric measurement at 5,350 angstroms (535 nm) of the complex formed by the reaction of arsine (generated from the arsenic acid) with silver diethyldithiocarbamate on a Perkin-Elmer Model 111 UV-VIS spectrophotometer. Minimum detection limit was 0.2 μg per sample.

2. RESULTS AND DISCUSSION

The raw data from air sampling at three arsenic acid spraying operations are summarized in Table B-1. Samples No. 5 and No. 6 were from the total dosage and collection efficiency samplers in all cases. Calculations of airborne concentrations of arsenic (As) were performed as follows:

$$\frac{\text{As collected } (\mu g)}{\text{Flow (scfm) x time (min)}} \cdot \frac{(\text{scf})}{0.028\ (m^3)} = \text{As, } \mu g/m^3 \qquad \text{(B-1)}$$

Collection efficiency of the air samplers was 82.53% ± 12.15 (95% confidence level). Efficiency was defined as:

$$\text{Efficiency} = \frac{(\text{concentration No. 5})}{(\text{concentration No. 5 + concentration No. 6})} \qquad \text{(B-2)}$$

Calculated concentrations were then divided by the efficiency to estimate true air concentration.

Table B-1. ARSENIC ACID SPRAYING DATA

Sample No.	Weight collected, μg As	Orifice	ΔP		Flow		Time		Concentration, μg As/m^3
			in. H_2O	kPa	scfm	10^{-4} m^3/s	min	s	
A-1R	0.7	2	4.8	1.19	0.82	3.87	17	1,020	1.8
A-2R	0.7	2	5.4	1.34	0.87	4.11	17	1,020	1.7
A-5R	0.8	4	3.0	0.75	0.65	3.07	177	10,620	0.2
A-6R	0.2	4	3.0	0.75	0.65	3.07	177	10,620	0.06
A-1L	0.3	3	4.5	1.12	0.97	4.58	21	1,260	0.5
A-5L	<0.2	1	4.3	1.07	0.82	3.87	153	9,180	<0.06
B-1R	0.2	3	5.3	1.32	1.05	4.95	13	780	0.5
B-4R	1.4	3	4.2	1.04	0.95	4.48	32	1,920	1.6
B-5R	3.4	1	3.0	0.75	0.68	3.21	52	3,120	3.4
B-6R	0.6	1	3.0	0.75	0.68	3.21	52	3,120	0.6
B-2L	0.6	2	6.6	1.64	0.95	4.48	9	540	2.5
B-3L	0.5	2	4.4	1.09	0.77	3.63	23	1,380	1.0
B-5L	0.6	4	4.3	1.07	0.78	3.68	52	3,120	0.5
C-1R	0.6	3	5.15	1.23	1.03	4.86	6	360	3.5
C-2R	1.2	3	4.95	1.23	1.02	4.81	2	120	21.0
C-3R	0.7	3	3.55	0.88	0.87	4.11	61	3,660	0.5
C-4R	2.2	3	4.8	1.19	1.01	4.77	3.4	204	22.9
C-5R	4.2	4	5.3	1.32	0.88	4.15	143	8,580	1.2
C-6R	0.8	4	5.3	1.32	0.88	4.15	143	8,580	0.2
C-3L	1.1	1	3.95	0.98	0.78	3.68	3.4	204	14.8
C-5L	<0.6	2	4.95	1.23	0.82	3.87	143	8,580	<0.2

H_3AsO_4 specific gravity = 2.0[73] (density = 16.667 lb/gal or 1.997 kg/m^3)

Active ingredient H_3AsO_4 = 75%

$$\text{Application rate} = \frac{0.75\ \text{gal}}{\text{acre}} \cdot \frac{16.667\ \text{lb}}{\text{gal}} \cdot \frac{454\ \text{g}}{\text{lb}} \cdot 0.75$$

$$= 4{,}256\ \text{g}\ H_3AsO_4/\text{acre}$$
$$(\text{or } 1.05\ \text{Mg}\ H_3AsO_4/\text{km}^2)$$

Field A swath = 10 m

$$\frac{4{,}046.9\ \text{m}^2}{\text{acre}} \cdot \frac{\text{swath}}{10\ \text{m}} = \frac{404.7\ \text{m} \cdot \text{swath}}{\text{acre}}$$

$$\text{Emission rate} = \frac{63.46\ \text{mg As}}{\text{m}} \cdot \frac{404.7\ \text{m}}{\text{acre}} \cdot \frac{\text{g}}{1{,}000\ \text{mg}}$$

$$= 25.7\ \text{g As/acre (or } 6.35\ \text{kg As/km}^2)$$

$$\frac{\text{Formula weight } H_3AsO_4}{\text{Formula weight As}} = \frac{141.95}{74.92} = 1.895$$

$$\text{Emission rate} = \frac{25.7\ \text{g As}}{\text{acre}} \cdot \frac{1.895\ \text{g}\ H_3AsO_4}{\text{g As}}$$

$$= 48.7\ \text{g}\ H_3AsO_4/\text{acre (or } 12.03\ \text{kg}\ H_3AsO_4/\text{km}^2)$$

$$\frac{\text{Emission rate}}{\text{Application rate}} \times 100\% = \%\ \text{drift}$$

$$\frac{48.7\ \text{g}\ H_3AsO_4/\text{acre}}{4{,}256\ \text{g}\ H_3AsO_4/\text{acre}} \times 100\% = 1.1\%\ \text{drift}$$

Average drift for field A was 1.1% of acid applied, as measured as airborne losses, while for fields B and C the losses were 1.0% and 0.3%, respectively. Off-target deposits might show drift values much higher than 1%, but they were not measured in this study. In fields A and B spray nozzles

[73] Handbook of Chemistry and Physics, 33rd Edition. Cleveland, Chemical Rubber Publishing Co., 1951. p. 1651.

were directed upward, which may have contributed to drift losses being three times those of field C, where nozzles were directed downward. Wind speed was greater at field A than at field B; however, drift losses do not demonstrate the effect of greater wind speed. Greater vertical mixing of the atmosphere (class B) at field B may have negated the wind speed effect.

Comparison of the drift calculations with data taken from other researchers[15,39,41] and treated in the same manner as above shows that the magnitude of airborne drift computed is reasonable. Azinphosmethyl insecticide applications[39] show drift losses of 2% to 12%, and methoxychlor drift[15,41] is 1% to 8%. Arsenic acid is relatively nonvolatile, thus drift would be expected to be minimal.

The maximum size of the aerosol droplets collected by the impinger samplers can be estimated. For example, in a wind of 1.3 m/s it will take 19 s for an aerosol droplet to reach a sampler located 25 m downwind. If the droplet must fall 2 m in those 19 s then its terminal settling velocity is estimated to be 0.091 m/s (0.3 ft/s). Figure B-1[74] shows that the droplet can be no larger than 60 μm in diameter. Similarly, at 400 m downwind, the largest droplet collected by the sampler will be 15 μm. Drift values in Table B-2 indicate that no correlation exists with distance. Droplets evaporate rapidly while traveling (settling) in air, particularly if they are comprised mostly of water, and this appears to be the case here. The same drift of arsenic is seen regardless of distance; however, droplet size is larger at closer distances. This occurs because the initial droplet emitted is a water-arsenic acid solution (about 95:5) and with increasing distance more of the water portion of the droplet evaporates.

---

[74]Chemical Engineers' Handbook, 4th Edition. Perry, J. H. (ed.). New York, McGraw-Hill, Inc., 1969. p. 5-62.

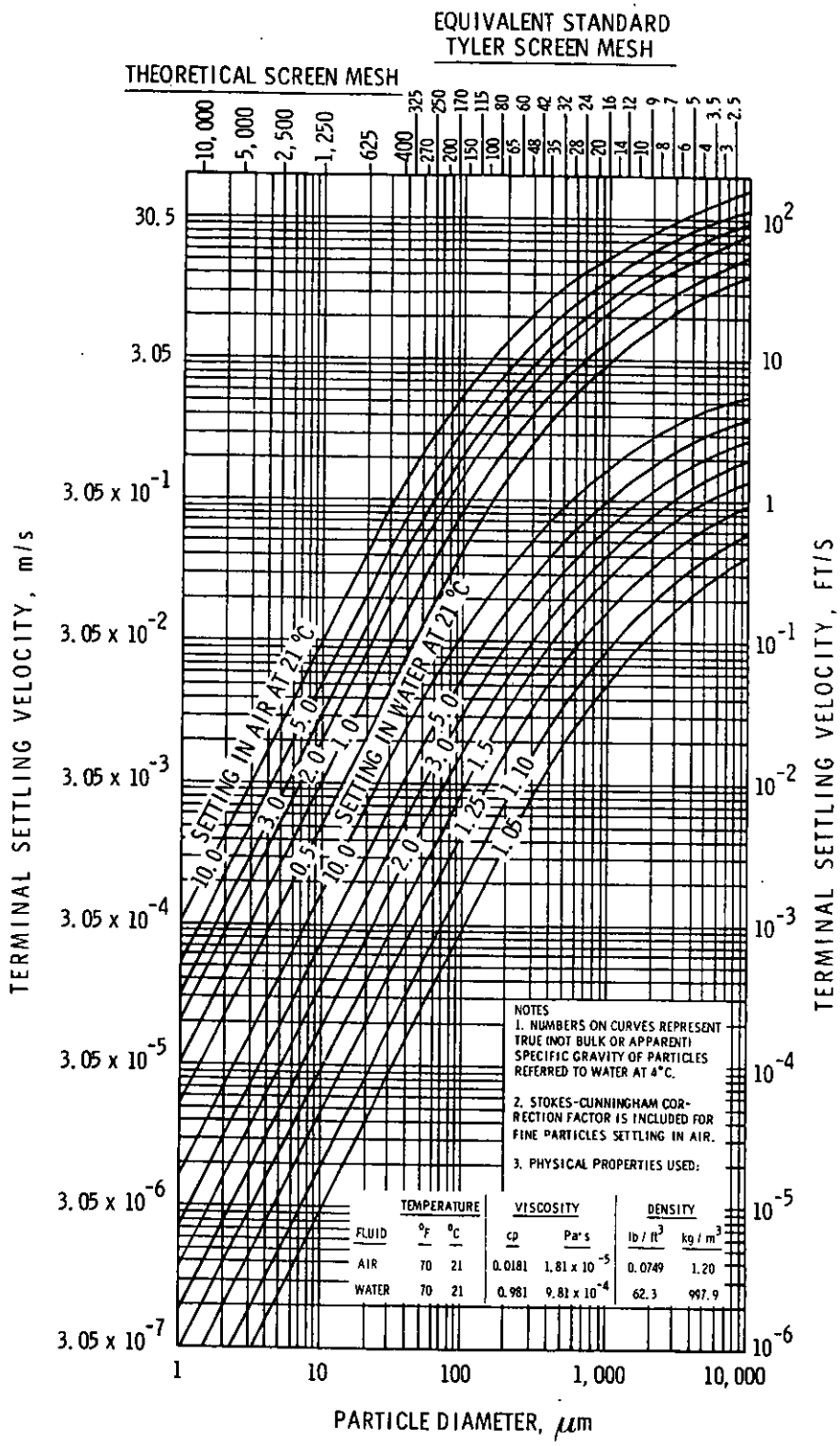

Figure B-1. Terminal velocities of spherical particles of different densities settling in air and water at 21°C under the action of gravity[74]

Reprinted with permission from Industrial and Engineering Chemistry 32, 292 (1940). Copyright by the American Chemical Society.

APPENDIX C

METHOD FOR ESTIMATING TLV VALUES FOR COMPOUNDS WHEN NONE EXISTS

In assessing the hazard potential associated with the application of agricultural chemicals and subsequent airborne losses and drift, it was found that no TLV value had been assigned by the American Conference of Governmental Industrial Hygienists (ACGIH) for many of the agricultural pesticides. The TLV of air pollutants is utilized as an integral part of the methods of emissions characterization in the source severity criteria.

Thirty agricultural chemicals selected from the booklet published by the ACGIH containing TLV values[29] are shown in Table C-1. Seven of these chemicals are herbicides, one is a fungicide, and 22 are insecticides; no distinction was made between inhalation and skin TLV. The most common toxicity value published for chemical substances is the acute oral LD_{50} dose for male rats. These LD_{50} values were tabulated with the TLV's and curve-fitting was attempted to correlate LD_{50} with TLV in the hope of obtaining a relationship whereby compounds of unknown TLV could be assigned functional TLV's for use in calculating the criteria described earlier. The results of the best curve-fit are presented below.

The best APL regression fit was found using an equation of the type:

Table C-1. AGRICULTURAL CHEMICALS WITH PUBLISHED TLV'S[29]

Substance (primary use)	TLV, mg/m^3	LD_{50}, mg/kg (acute oral rat dose)
Abate (insecticide)	10	2,000
Aldrin (insecticide)	0.25	55
Allyl alcohol (herbicide)	3	95
Ammate (herbicide)	10	3,900
Arsenic acid (herbicide)	0.5	48
Carbaryl (Sevin®) (insecticide)	5	500
Chlordane (insecticide)	0.5	570
Toxaphene (insecticide)	0.5	69
2,4-D (herbicide)	10	1,200
DDT (insecticide)	1	113
DDVP (insecticide)	1	56
Demeton (insecticide)	0.1	9
Diazinon (insecticide)	0.1	134
Dibrom (insecticide)	3	430
Dieldrin (insecticide)	0.25	60
Dinitro-o-cresol (insecticide)	0.2	50
Diquat (herbicide)	0.5	300
Endrin (insecticide)	0.1	5
EPN (insecticide)	0.5	50
Heptachlor (insecticide)	0.5	90
Malathion (insecticide)	10	1,375
Methoxychlor (insecticide)	10	5,000
Methylparathion (insecticide)	0.2	25
Paraquat (herbicide)	0.5	145
Parathion (insecticide)	0.1	15
Phosdrin (insecticide)	0.1	7
Ronnel (insecticide)	10	1,740
2,4,5-T (herbicide)	10	500
TEPP (insecticide)	0.05	1.2
Thiram (fungicide)	5	860

$$y = ax^b \tag{C-1}$$

Logarithmic transformation of Equation C-1 yields:

$$\ln y = \ln a + b \ln x \tag{C-2}$$

Equation C-2 can be further transformed to resemble the familiar straight-line slope-intercept equation form:

$$Y = MX + B' \tag{C-3}$$

if $Y = \ln y$, $B' = \ln a$, $M = b$, and $X = \ln x$. The indicators of goodness-of-fit for this regression show that $R^2 = 0.7951$ and the F-value = 108.6.

The fitted values for the slope-intercept form were:

$$B' = -3.921$$

$$M = 0.774$$

Standard errors were computed and resulted in:

$S_M = 0.07426$ = standard error of M (slope)

$S_{Y \cdot X} = 0.821$ = standard error of estimate

$S_B = 0.3936$ = standard error of B' (intercept)

S_B had to be calculated separately where

$$S_B = S_{X \cdot Y} \sqrt{\frac{\Sigma(\text{Transformed } x_i)^2}{n' \Sigma(\text{Transformed } x_i - \text{mean transformed } x_i)^2}}$$

Using the above calculated values, 95% confidence intervals were obtained about the slope and intercept of the equation $y = ax^b$:

(A) Slope

b (or M) $\pm Z_{\alpha/2} S_M$ gives the upper and lower limits of the confidence interval. For n' = 30 and $\alpha = 0.05$ (95% confidence level), $Z_{\alpha/2} = 1.96$; the confidence interval is then $0.774 \pm (1.96)(0.7426)$ or $(0.6285 \leq \text{slope} \leq 0.9195)$ at the 95% level. The slope confidence interval is the same in transformed space as in the original space.

(B) Intercept

In transformed space, the 95% confidence interval would be $B' \pm Z_{\alpha/2} S_B$; but in the original space, we have

$$\frac{\text{anti ln a}}{\text{anti ln}(Z_{\alpha/2} S_B)} \leq \text{intercept} \leq \text{anti ln a}\left[\text{anti ln}(Z_{\alpha/2} S_B)\right]$$

which is $\frac{0.01982}{2.1629} \leq \text{intercept} \leq (0.01982)(2.1629)$

or $(0.00916 \leq \text{intercept} \leq 0.04287)$ at the 95% level.

In the Y = MX + B' equation form, the 95% confidence limits for B' are ±19.7% of B', and for M are ±18.8% of M. In original space using the exponential equation form $y = ax^b$, the limits for b are the same as those for M, but the confidence limits for "a" become +216.5% and -46.3%. Dividing the maximum value by the minimum value for the 95% confidence interval yields 4.68 for "a" and 1.46 for b.

The final form of the regressed equation relating LD_{50} to TLV, given the original (LD_{50}, TLV) pairs, is:

$$TLV = 0.0198(LD_{50})^{0.774} \qquad \text{(C-4)}$$

where LD_{50} = acute oral dose, mg/kg, for male rat
TLV = threshold limit value, mg/m^3

SECTION VIII

GLOSSARY OF TERMS

ABSCISSION - The process by which a leaf or other part is separated from a plant.

ACTIVE INGREDIENT - A substance contained in a formulation which will by itself act in the same manner and for the same purposes as the directions provide for the formulation as a whole.

ADJUVANT - An ingredient which, when added to a formulation, aids the action of the toxicant.

ATMOSPHERIC STABILITY CLASS - Categories used to describe the turbulent structure and wind speed of the atmosphere.

ATOMIZATION - The process of reducing a liquid to a fine spray.

BOLL - The pod of a plant, especially of cotton.

BRONCHITIS - An inflammation, acute or chronic, of the mucous lining of the bronchial tubes.

CARRIER - An inert material added to a technical poison, to facilitate later dilution to field strength in simple blending equipment.

DEF - A defoliant, tributylphosphorotrithioate.

DEFOLIATION - Accelerated leaf abscission.

DERMATITIS - Inflammation of the skin.

DESICCATION - Accelerated drying of plant or plant part.

EDEMA - An abnormal accumulation of fluid in cells, tissues, or cavities of the body, resulting in swelling.

FIBROSIS - An abnormal increase in the amount of fibrous connective tissue in an organ, part, or tissue.

FOLEX - A defoliant, tributylphosphorotrithioite.

HEMORRHAGE - The escape of blood from its vessels; especially, heavy bleeding.

HERBICIDE - A chemical intended for killing plants or interrupting their normal growth.

LD_{50} - Abbreviation of median lethal dose which indicates the amount of toxicant necessary to effect a 50% kill of the pest being tested.

MICRONAIRE - A measure of cotton lint fineness.

NASAL SEPTUM - The part of the nose which separates the nostrils.

NEWTONIAN FLUID - A fluid in which there is a linear relation between the shear stress and the rate of shear.

NON-NEWTONIAN FLUID - A fluid in which the relation between the shear stress and the rate of shear is not linear.

PARAQUAT - Common name for compounds containing the cation 1:1'-dimethyl-4,4'-bipyridylium; a herbicide for coarse grasses and a major desiccant for cotton.

PESTICIDE - Substance or mixture of substances intended for preventing, destroying, repelling, or mitigating any insects, rodents, nematodes, fungi, or weeds, or any other forms of life declared to be pests.

PETIOLE - The stalk to which a leaf is attached.

PHYTOTOXICITY - The state of being poisonous to plants.

PULMONARY DAMAGE - Damage to the lung or lung-like organs.

ROUGHNESS LENGTH - A term which expresses the effect of varying ground surface roughness on the wind velocity profile close to ground level.

SHEAR RATE - The rate at which material (water) is fragmented by friction and tearing forces when the material is sprayed.

SLIPSTREAM - The current of air thrust backward by the spinning propeller of an aircraft.

STAPLE - A particular length and degree of fineness of cotton fibers.

STOKES' LAW - An equation used to calculate the drag force between a particle and surrounding fluid in relative motion.

SUPERADIABATIC - An atmospheric condition in which the lapse rate ($\partial T/\partial Z$) is less than -1°C/100 meters.

SURFACTANT - A substance that reduces the interfacial tension of two boundary lines.

SWATH - The space or width covered by one pass of a moving device.

SECTION IX

CONVERSION FACTORS AND METRIC PREFIXES[75]

CONVERSION FACTORS

To convert from	to	Multiply by
angstrom	meter	1.000×10^{-10}
degree Celsius (°C)	degree Fahrenheit	$t_{°F} = 1.8\ t_{°C} + 32$
degree Kelvin (°K)	degree Celsius	$t_{°C} = t_{°K} - 273.15$
gram (g)	pound-mass	2.205×10^{-3}
gram/kilogram (g/kg)	pound/ton	1.999
gram/meter^2 (g/m^2)	pound/acre	8.928
kilogram (kg)	pound-mass (lb mass avoirdupois)	2.204
kilogram (kg)	ton (short, 2,000 lb mass)	1.102×10^{-3}
kilogram/meter^3 (kg/m^3)	lb mass/foot^3	6.243×10^{-2}
kilometer/hour (km/hr)	miles/hr	6.215×10^{-1}
kilometer^2 (km^2)	acre	2.470×10^{2}
meter (m)	foot	3.281
meter (m)	mile	6.215×10^{-4}
meter/second (m/s)	miles/hr	2.237
meter^2 (m^2)	acre	2.470×10^{-4}
meter^3 (m^3)	foot^3	3.531×10^{1}
metric ton	pound	2.205×10^{3}
Newtons/meter (N/m)	dynes/centimeter	1.000×10^{3}
pascal (Pa)	inch of Hg (60°F)	2.961×10^{-4}
pascal (Pa)	pound-force/inch^2 (psi)	1.450×10^{-4}
pascal-second (Pa-s)	poise	1.000×10^{1}
radian (rad)	degree (angle)	5.730×10^{1}

[75] Metric Practice Guide. American Society for Testing and Materials. Philadelphia. ASTM Designation: E 380-74. November 1974. 34 p.

PREFIXES

Prefix	Symbol	Multiplication Factor	Example
kilo	k	10^3	1 kPa = 1 x 10^3 paschal
milli	m	10^{-3}	1 mg = 1 x 10^{-3} gram
micro	μ	10^{-6}	1 μm = 1 x 10^{-6} meter
nano	n	10^{-9}	1 nm = 1 x 10^{-9} meter

SECTION X

REFERENCES

1. Osborne, D. J. Defoliation and Defoliants. Nature. 219:564-567, August 10, 1968.

2. Miller, C. S., E. D. Cook, J. L. Hubbard, J. S. Newman, E. L. Thaxton, and L. H. Wilkes. Cotton Desiccation Practices and Experimental Results in Texas. Texas Agricultural Experiment Station. College Station, Texas. Miscellaneous Publication No. MP-903. November 1968. 14 p.

3. Addicott, F. T., and R. S. Lynch. Defoliation and Desiccation: Harvest-Aid Practices. In: Advances in Agronomy, Vol. 9. 1957. p. 69-93.

4. Insecticidal Spraying of Field Crops With Ground Machinery. Texas Agricultural Extension Service. College Station, Texas. Bulletin No. L-486. August 1961.

5. Riley, J. A., and W. L. Giles. Agricultural Meteorology in Relation to the Use of Pesticides. Agricultural Meteorology. 2:225-245, 1965.

6. Akesson, N. B., and W. E. Burgoyne. Spray Atomization, Application Volume and Coverage. Proceedings and Papers of the Thirty-Fifth Annual Conference of the California Mosquito Control Association, Inc., and the American Mosquito Control Association. February 1967. p. 139-144.

7. Yates, W. E., and N. B. Akesson. Reducing Pesticide Chemical Drift. In: Pesticide Formulations. Van Valkenburg, Wade, (ed.). New York, Marcel Dekker, Inc., 1973. p. 275-341.

8. Akesson, N. B., and W. E. Yates. Problems Relating to Application of Agricultural Chemicals and Resulting Drift Residues. Annual Review of Entomology. 9:285-318, 1964.

9. Kutsenogiy, K. P., V. I. Makarov, Y. F. Chankin, V. M. Sakharov, and G. N. Zagulyayev. Study of the Physico-chemical Characteristics of Large Aerosol Waves. Institut Eksperimental'nye Meteorologiya. 27:97-104, 1972.

10. Maybank, J., and K. Yoshida. Delineation of Herbicide Drift Hazards on the Canadian Prairies. Transactions of the American Society of Agricultural Engineers. 12:759-762, 1969.

11. Courshee, R. J. Investigations on Spray Drift. II. The Occurrence of Drift. Journal of Agricultural Engineering Research. 4:229-241, 1959.

12. Ware, G. W., W. P. Cahill, and B. J. Estesen. Pesticide Drift: Aerial Applications Comparing Conventional Flooding vs. Raindrop® Nozzles. Journal of Economic Entomology. 68(3):329-330, 1974.

13. Coutts, H. H., and W. E. Yates. Analysis of Spray Droplet Distributions from Agricultural Aircraft. Transactions of the American Society of Agricultural Engineers. 11(1):25-27, 1968.

14. Ware, G. W., E. J. Apple, W. P. Cahill, P. D. Gerhardt, and K. R. Frost. Pesticide Drift. II. Mist Blower vs. Aerial Application of Sprays. Journal of Economic Entomology. 62(4):844-846, August 1969.

15. Ware, G. W., B. J. Estesen, W. P. Cahill, P. D. Gerhardt, and K. R. Frost. Pesticide Drift. I. High-Clearance vs. Aerial Application of Sprays. Journal of Economic Entomology. 62(4):840-843, August 1969.

16. Yeo, D., N. B. Akesson, and H. H. Coutts. Drift of Toxic Chemicals Released from a Low-Flying Aircraft. Nature. 183:131-132, January 10, 1959.

17. Brooks, F. A. The Drifting of Poisonous Dusts Applied by Airplanes and Land Rigs. Agricultural Engineering. 28(6):233-239, June 1947.

18. Scotton, J. W. Atmospheric Transport of Pesticide Aerosols. U.S. Dept. of Health, Education, and Welfare, Public Health Service. Washington. PB 228 612. July 1965. 30 p.

19. Yates, W. E., N. B. Akesson, and H. H. Coutts. Drift Hazards Related to Ultra-Low-Volume and Diluted Sprays Applied by Agricultural Aircraft. Transactions of the American Society of Agricultural Engineers. 10(5):628-632, 638, 1967.

20. Pooler, F. Atmospheric Transport and Dispersion of Pesticides. (Presented at the Symposium on Guidelines for Environmental Studies of Pesticides. 162nd National Meeting, American Chemical Society. Washington. September 1971.) 20 p.

21. Census of Agriculture, 1969. Volume V, Special Reports. Part 15, Graphic Summary. Washington, U.S. Bureau of the Census, 1973.

22. Akesson, Dr. N. B. Department of Agricultural Engineering, University of California-Davis. Personal communication, March 1975.

23. Metzer, Dr. R. B. Texas Agricultural Extension Service, College Station, Texas. Personal communication, February 1975.

24. Ware, Dr. G. W. Department of Entomology, University of Arizona, Tucson, Arizona. Personal communication, January 1975.

25. Miller, Dr. C. S. Department of Plant Sciences, Texas A & M University, College Station, Texas. Personal communication, January 1975.

26. Mullins, Dr. J. A. Tennessee Agricultural Extension Service, Jackson, Tennessee. Personal communication, January 1975.

27. The Toxic Substances List, 1974 Edition. U.S. Department of Health, Education, and Welfare. Rockville, Maryland. HEW Publication No. (NIOSH) 74-134. June 1974. 904 p.

28. 1969 Farm Chemicals Handbook. Willoughby, Ohio, Meister Publishing Co., 1968. p. D158.

29. TLVs® Threshold Limit Values for Chemical Substances and Physical Agents in the Workroom Environment with Intended Changes for 1975. American Conference of Governmental Industrial Hygienists. Cincinnati. 1975. 97 p.

9. Kutsenogiy, K. P., V. I. Makarov, Y. F. Chankin, V. M. Sakharov, and G. N. Zagulyayev. Study of the Physico-chemical Characteristics of Large Aerosol Waves. Institut Eksperimental'nye Meteorologiya. 27:97-104, 1972.

10. Maybank, J., and K. Yoshida. Delineation of Herbicide Drift Hazards on the Canadian Prairies. Transactions of the American Society of Agricultural Engineers. 12:759-762, 1969.

11. Courshee, R. J. Investigations on Spray Drift. II. The Occurrence of Drift. Journal of Agricultural Engineering Research. 4:229-241, 1959.

12. Ware, G. W., W. P. Cahill, and B. J. Estesen. Pesticide Drift: Aerial Applications Comparing Conventional Flooding vs. Raindrop® Nozzles. Journal of Economic Entomology. 68(3):329-330, 1974.

13. Coutts, H. H., and W. E. Yates. Analysis of Spray Droplet Distributions from Agricultural Aircraft. Transactions of the American Society of Agricultural Engineers. 11(1):25-27, 1968.

14. Ware, G. W., E. J. Apple, W. P. Cahill, P. D. Gerhardt, and K. R. Frost. Pesticide Drift. II. Mist Blower vs. Aerial Application of Sprays. Journal of Economic Entomology. 62(4):844-846, August 1969.

15. Ware, G. W., B. J. Estesen, W. P. Cahill, P. D. Gerhardt, and K. R. Frost. Pesticide Drift. I. High-Clearance vs. Aerial Application of Sprays. Journal of Economic Entomology. 62(4):840-843, August 1969.

16. Yeo, D., N. B. Akesson, and H. H. Coutts. Drift of Toxic Chemicals Released from a Low-Flying Aircraft. Nature. 183:131-132, January 10, 1959.

17. Brooks, F. A. The Drifting of Poisonous Dusts Applied by Airplanes and Land Rigs. Agricultural Engineering. 28(6):233-239, June 1947.

18. Scotton, J. W. Atmospheric Transport of Pesticide Aerosols. U.S. Dept. of Health, Education, and Welfare, Public Health Service. Washington. PB 228 612. July 1965. 30 p.

19. Yates, W. E., N. B. Akesson, and H. H. Coutts. Drift Hazards Related to Ultra-Low-Volume and Diluted Sprays Applied by Agricultural Aircraft. Transactions of the American Society of Agricultural Engineers. 10(5):628-632, 638, 1967.

20. Pooler, F. Atmospheric Transport and Dispersion of Pesticides. (Presented at the Symposium on Guidelines for Environmental Studies of Pesticides. 162nd National Meeting, American Chemical Society. Washington. September 1971.) 20 p.

21. Census of Agriculture, 1969. Volume V, Special Reports. Part 15, Graphic Summary. Washington, U.S. Bureau of the Census, 1973.

22. Akesson, Dr. N. B. Department of Agricultural Engineering, University of California-Davis. Personal communication, March 1975.

23. Metzer, Dr. R. B. Texas Agricultural Extension Service, College Station, Texas. Personal communication, February 1975.

24. Ware, Dr. G. W. Department of Entomology, University of Arizona, Tucson, Arizona. Personal communication, January 1975.

25. Miller, Dr. C. S. Department of Plant Sciences, Texas A & M University, College Station, Texas. Personal communication, January 1975.

26. Mullins, Dr. J. A. Tennessee Agricultural Extension Service, Jackson, Tennessee. Personal communication, January 1975.

27. The Toxic Substances List, 1974 Edition. U.S. Department of Health, Education, and Welfare. Rockville, Maryland. HEW Publication No. (NIOSH) 74-134. June 1974. 904 p.

28. 1969 Farm Chemicals Handbook. Willoughby, Ohio, Meister Publishing Co., 1968. p. D158.

29. TLVs® Threshold Limit Values for Chemical Substances and Physical Agents in the Workroom Environment with Intended Changes for 1975. American Conference of Governmental Industrial Hygienists. Cincinnati. 1975. 97 p.

30. 1969 Cotton Defoliation Guide. Texas Agricultural Extension Service. College Station, Texas. Bulletin No. L-145.

31. Strickland, J., and T. Blue. Environmental Indicators for Pesticides. Stanford Research Institute, Council on Environmental Quality Contract EQC 217. Menlo Park, California. PB 210 666. April 1972. p. 38.

32. FDA Pesticide Analytical Manual. Vol. II. Pesticide Reg. Sec. 120,272. U.S. Department of Health, Education, and Welfare. November 1973.

33. Weed Killers. In: Kirk-Othmer Encyclopedia of Chemical Technology, Second Edition. Vol. 22. New York, John Wiley & Sons, Inc., 1969. p. 19.

34. von Rümker, R., E. W. Lawless, and A. F. Meiners. Production, Distribution, Use and Environmental Impact Potential of Selected Pesticides. Midwest Research Institute, Council on Environmental Quality. Contract EQC-311. Kansas City, Missouri. March 1974. p. 256.

35. Sullivan, R. J. Preliminary Air Pollution Survey of Arsenic and Its Compounds, A Literature Review. Litton Systems, Inc., HEW Contract PH 22-68-25. October 1969. p. 2.

36. Slade, P. Photochemical Degradation of Paraquat. Nature. 207:515-516, 1965.

37. Staiff, D. C., S. W. Comer, J. F. Armstrong, and H. R. Wolfe. Exposure to the Herbicide, Paraquat. Bulletin of Environmental Contamination and Toxicology. 14(3):334-340, 1975.

38. Rose, M. S. The Search for an Effective Treatment of Paraquat Poisoning. Chemistry and Industry (London). 1975(10):413-415, May 17, 1975.

39. Argauer, R. J., H. C. Mason, C. Corley, A. H. Higgins, J. N. Sauls, and L. A. Liljedahl. Drift of Water-Diluted and Undiluted Formulations of Malathion and Azinphosmethyl Applied by Airplane. Journal of Economic Entomology. 61(4):1015-1020, August 1968.

40. Ware, G. W., B. J. Estesen, W. P. Cahill, P. D. Gerhardt, and K. R. Frost. Pesticide Drift. III. Drift Reduction with Spray Thickeners. Journal of Economic Entomology. 63(4):1314-1316, August 1970.

41. Ware, G. W., B. J. Estesen, W. P. Cahill, and K. R. Frost. Pesticide Drift. V. Vertical Drift from Aerial Spray Applications. Journal of Economic Entomology. 65(2):590-592, April 1972.

42. Turner, D. B. Workbook of Atmospheric Dispersion Estimates. U.S. Department of Health, Education, and Welfare. Cincinnati. Public Health Service Publication No. 999-AP-26. May 1970, 65 p.

43. Census of Agriculture, 1971. Volume V, Special Reports. Part 3, Cotton. Washington, U.S. Bureau of the Census, 1973.

44. Agricultural Statistics 1973. Washington, U.S. Department of Agriculture, 1973. 617 p.

45. Andrilenas, P. A. Farmers' Use of Pesticides in 1971 -- Quantities. U.S. Department of Agriculture. Washington. Agricultural Economic Report No. 252. July 1974. 56 p.

46. Texas Cotton Review, 1973-74. Natural Fibers Economic Research. University of Texas at Austin. Research Report No. 104 (PB 235 388). July 1974. 143 p.

47. Ware, G. W., C. H. Kreader, and L. Moore. Agricultural Use of Pesticides in Arizona. Progressive Agriculture. University of Arizona. Tucson. July-August 1974. p. 12-13,16.

48. Yates, W. E., N. B. Akesson, and D. Bayer. Effects of Spray Adjuvants on Drift Hazards. (Paper No. 74-1008, presented at the 1974 Annual Meeting, American Society of Agricultural Engineers. Stillwater, Oklahoma. June 23-26, 1974.) 26 p.

49. Butler, B. J., N. B. Akesson, and W. E. Yates. Use of Spray Adjuvants to Reduce Drift. Transactions of the American Society of Agricultural Engineers. 12(2):182-186, 1969.

50. Kanellopoulos, A. G. Additives in Herbicide Formulations. Chemistry and Industry (London). 1974(9):951-955, December 7, 1974.

51. Akesson, N. B., W. E. Yates, and R. E. Cowden. What's Happening in Aerial Application Research. Unpublished paper. Agricultural Engineering Department, University of California at Davis. 1975.

52. Dacagin Speeds Cotton Defoliation. Agricultural Chemicals. October 1969. p. 83.

53. Goering, C. E., and B. J. Butler. Paired Field Studies of Herbicide Drift. (Paper No. 73-1575, presented at 1973 Winter Meeting, American Society of Agricultural Engineers. Chicago. December 11-14, 1973.) 22 p.

54. Schultz, H. B., N. B. Akesson, W. E. Yates, and K. H. Ingebretsen. Drift of 2,4-D Applied by Plane. California Agriculture. 10(8):4-5,14, August 1956.

55. Ware, G. W., B. J. Estesen, W. P. Cahill, and K. R. Frost. Pesticide Drift. VI. Target and Drift Deposits vs. Time of Applications. Journal of Economic Entomology. 65(4):1170-1172, August 1972.

56. Scifres, C. J., H. G. McCall, and D. W. Fryear. Foam Systems as Herbicide Carriers for Range Improvement. Texas Agricultural Experiment Station. Miscellaneous Publication 1974. 18 p.

57. Akesson, N. B., S. E. Wilce, and W. E. Yates. Confining Aerial Applications to Treated Fields -- A Realistic Goal. Agrichemical Age. December 1971. p. 11-14.

58. Threadgill, E. D., and R. F. Colwick. Ground Applications of Cotton Defoliants with Air Aspirating Nozzles. In: Proceedings of the 27th Annual Beltwide Cotton Defoliation and Physiology Conference. Phoenix. January 9-10, 1973. p. 35.

59. Brazelton, R. W. Control of Chemical Drift. University of California, Agricultural Extension. Bulletin No. OSA #n5. July 1971. 2 p.

60. Batchelder, D. G., J. G. Porterfield, and G. McLaughlin. Thermal Defoliation of Cotton. In: Proceedings of the 25th Annual Beltwide Cotton Defoliation and Physiology Conference. Atlanta. January 12-13, 1971. p. 36-37.

61. Cotton Growers Spent $60 Million for Herbicide in '66, Shaw Tells Cotton Mech Conference. Farm Chemicals. 130(2):80-82, February 1967.

62. Erby, W. A., W. E. Erner, J. S. Skaptason, and R. A. Walde. Defoliation and Desiccation of Cotton with cis-2,3,5,5,5-Pentachloro-4-keto-2-pentanoic Acid. U.S. Patent 3,472,004 (to Air Products and Chemicals, Inc.), October 14, 1969.

63. Walworth, B. L. 3-Amino-3-carboxypropylmethylsulfoximine Salts as Nonselective Water-Soluble Defoliants. U.S. Patent 3,323,895 (to American Cyanamid Co.), June 6, 1967.

64. Neuville, M. L., and R. B. Carroll. Cacodylic Acid Plant Defoliants. U.S. Patent 3,378,364 (to Ansul Co.), April 16, 1968.

65. Hensel, J., and D. W. Gier. Defoliating and Desiccating Plants with Substituted Triphenyl Phosphates and Phosphites. U.S. Patent 3,416,911 (to Chemagro Corp.), December 17, 1968.

66. A Natural Defoliant. Agricultural Research. 14(5):11, November 1965.

67. Miller, C. S., L. H. Wilkes, E. L. Thaxton, and J. L. Hubbard. Cotton Wilt-Harvest and Wiltant Defoliation Effectiveness in Texas. Texas Agricultural Experiment Station. Miscellaneous Publication No. MP-1010. October 1971. 12 p.

68. 1973 Handbook of Agricultural Charts. Washington, U.S. Department of Agriculture, October 1973.

69. Saunders, J. M., and H. R. Carns. The Usage of Harvest-Aid Chemicals, 1952-1960. In: Proceedings of the 16th Annual Beltwide Cotton Defoliation and Physiology Conference. Memphis. January 9-10, 1962. p. 8-12.

70. Eichers, T., P. A. Andrilenas, R. Jenkins, and A. Fox. Quantities of Pesticides Used by Farmers in 1964. U.S. Department of Agriculture. Washington. Agricultural Economic Report No. 131. January 1968. 37 p.

71. Eimutis, E. C. Source Assessment: Prioritization of Stationary Air Pollution Sources, Model Description. Monsanto Research Corporation. Dayton. Report No. MRC-DA-508. Environmental Protection Agency, EPA-600/2-76-032a. February 1976. 77 p.

72. Meteorology and Atomic Energy 1968. Slade, D. H. (ed.). U.S. Atomic Energy Commission. (NTIS TID-24190). July 1968. 445 p.

73. Handbook of Chemistry and Physics, 33rd Edition. Cleveland, Chemical Rubber Publishing Co., 1951. p. 1651.

74. Chemical Engineers' Handbook, 4th Edition. Perry, J. H. (ed.). New York, McGraw-Hill, Inc., 1969. p. 5-62.

75. Metric Practice Guide. American Society for Testing and Materials. Philadelphia. ASTM Designation: E 380-74. November 1974. 34 p.

TECHNICAL REPORT DATA
(Please read Instructions on the reverse before completing)

1. REPORT NO. EPA-600/2-77-107g	2.	3. RECIPIENT'S ACCESSION NO.
4. TITLE AND SUBTITLE SOURCE ASSESSMENT: DEFOLIATION OF COTTON, State of the Art		5. REPORT DATE July 1977
		6. PERFORMING ORGANIZATION CODE
7. AUTHOR(S) J.A. Peters and T.R. Blackwood		8. PERFORMING ORGANIZATION REPORT NO. MRC-DA-708
9. PERFORMING ORGANIZATION NAME AND ADDRESS Monsanto Research Corporation, 1515 Nicholas Road, Dayton, Ohio 45407		10. PROGRAM ELEMENT NO. 1AB015; ROAP 21AXM-071
		11. CONTRACT/GRANT NO. 68-02-1874
12. SPONSORING AGENCY NAME AND ADDRESS EPA, Office of Research and Development, Industrial Environmental Research Laboratory, Research Triangle Park, NC 27711		13. TYPE OF REPORT AND PERIOD COVERED Task Final; 2/75-2/76
		14. SPONSORING AGENCY CODE EPA/600/13

15. SUPPLEMENTARY NOTES IERL-RTP task officer for this report is David K. Oestreich, Mail Drop 62, 919/541-2547.

16. ABSTRACT The report describes a study of air pollutants emitted during the defoliation or desiccation of cotton prior to harvest. (Defoliation is the process by which leaves are abscissed from the plant by the action of topically applied chemical agents. Desiccation by chemicals is the drying or rapid killing of the leaf blades and petioles with the leaves remaining in a withered state on the plant.) Emissions of defoliants were DEF, Folex, and sodium chlorate. Emissions of desiccants were arsenic acid and paraquat. Source severity for emissions from a representative source were 0.69 + or -0.32 for arsenic acid, 0.30 for paraquat, 0.44 for sodium chlorate, and 0.67 for DEF. (Source severity is a measure of the hazard potantial of a representative emission source; for this source type, it was defined as the ratio of the time-averaged ground level concentration of the species emitted at the downwind perimeter of a representative field undergoing spraying for defoliation or desiccation, to a time-adjusted exposure factor related to TLV.) Existing control technology for aerial application of pesticides includes the use of fluid additives and nozzle design/orientation to reduce chemical drift. Future control technology considerations include the use of foam spray systems, multiple needle nozzle systems, and the replacement of chemical defoliation with thermal defoliation.

17. KEY WORDS AND DOCUMENT ANALYSIS

a. DESCRIPTORS		b. IDENTIFIERS/OPEN ENDED TERMS	c. COSATI Field/Group	
Air Pollution	Arsenic Organic Acids	Air Pollution Control	13B	
Cotton Plants		DEF	02D	07C
Defoliation	Herbicides	Folex		06F
Desiccation	Pyridines	Sodium Chlorate	07A	
Sodium	Sulfonic Acids	Paraquat		
Chlorates	Pesticides	Source Severity		

18. DISTRIBUTION STATEMENT Unlimited	19. SECURITY CLASS (This Report) Unclassified	21. NO. OF PAGES 133
	20. SECURITY CLASS (This page) Unclassified	22. PRICE

EPA Form 2220-1 (9-73)

ENVIRONMENTAL PROTECTION AGENCY
Technical Publications Branch
Office of Administration
Research Triangle Park, North Carolina 27711

OFFICIAL BUSINESS
AN EQUAL OPPORTUNITY EMPLOYER

POSTAGE AND FEES PAID
ENVIRONMENTAL PROTECTION AGENCY
EPA - 335

SPECIAL FOURTH-CLASS RATE
BOOK

U.S. MAIL

Return this sheet if you do NOT wish to receive this material ☐ or if change of address is needed ☐. (Indicate change, including ZIP code.)

PUBLICATION NO. EPA-600/2-77-107g