AP-42 Section 9.7
Reference 18
Report Sect. 4
Reference 10

Note: This is a reference cited in *AP 42, Compilation of Air Pollutant Emission Factors, Volume I Stationary Point and Area Sources.* AP42 is located on the EPA web site at www.epa.gov/ttn/chief/ap42/

The file name refers to the reference number, the AP42 chapter and section. The file name "ref02_c01s02.pdf" would mean the reference is from AP42 chapter 1 section 2. The reference may be from a previous version of the section and no longer cited. The primary source should always be checked.

TENNESSEE DEPARTMENT OF HEALTH AND ENVIRONMENT
CUSTOMS HOUSE
701 BROADWAY
NASHVILLE, TENNESSEE 37219-5403

February 22, 1989

Mr. Tom Hammond and
Mr. Miller Pounds
Halls Gin Company
P.O. Box 158
Industrial Road
Halls, TN 38040

RE: 49-00074-01-A3

Dear Messrs. Hammond and Pounds:

Please find enclosed corrections and revisions to the source test report on Halls Gin. This is in accordance with my discussions with Mr. Bob Marshall after he reviewed the report. Please replace previous pages with these insertions.

Thanks once again for your cooperation in allowing the Division of Air Pollution Control to conduct source testing at your facility. We certainly appreciate Mr. Marshall's assistance as well as the knowledge he shared with us due to his extensive background in gin operation and air pollution control design.

We also appreciate the courtesy and cooperation of Mrs. Nellie Baker and the rest of your staff.

Sincerely,

Eric R. Flowers

Eric Flowers
Air Resource Management
Tennessee Air Pollution Control

EF/F1169052

Enclosure

cc: Bob Marshall

Compliance Monitoring Program/AEP - 11

TENNESSEE DEPARTMENT OF HEALTH AND ENVIRONMENT
CUSTOMS HOUSE
701 BROADWAY
NASHVILLE, TENNESSEE 37219-5403

January 25, 1989

Mr. Tom Hammond and Mr. Miller Pounds
Halls Gin Company
P. O. Box 158
Industrial Road
Halls, Tennessee 38040

Reference Number: 49-00047~~8~~-01-A3
74

Dear Messrs. Hammond and Pounds:

Enclosed as an attachment to this letter is a copy of the source test report of the testing conducted by personnel of this agency on the Halls Gin Company cotton gin. This report shows that the facility was in compliance with both the currently effective process weight table for new sources and the Division's previous process weight table specific for cotton gins. This latter table is still effective at the Federal level.

If you have any questions concerning the contents of this report, please contact Mr. Carl Koontz at (615) 741-3651.

Sincerely,

Harold E. Hodges by EdS

Harold E. Hodges, P. E.
Technical Secretary
Tennessee Air Pollution Control Board

cc: Jackson Field Office

Enclosure - 1

Cotton Gin Testing of Halls Gin Company by Tennessee Air Pollution Control

	Operation Involved (Sequential)	Total Flow Rate (ft^3/min)	Flow Rate Per Emission Point (ft^3/min)	Cyclone or Exhaust Diameter (inches)	Average Outlet Concentration (gr/dscf)	Total Emissions (lbs/hr)
1.	Unloading Pipe, Quad Cyclones 1A, 1B, 1C, and 1D	11,500	2,875	28	.0028	.26
2.	1A Inclined Cleaner and Stick Machine, Dual Cyclones 3A and 3B	5,500	2,750	34	.0085	.36
3.	Inclined Cleaner 1B and Stick Machine, Dual Cyclones 2A and 2B	5,500	2,750	34	.0132	.59
4.	2A Inclined Cleaner, Dual Cyclones 5A and 5B	4,500	2,250	28	.0116	.38
5.	2B Inclined Cleaner, Dual Cyclones 4A and 4B	4,500	2,250	28	.0004	.23
6.	Overflow Separator, Conveyor Distributor, Impact Cleaners, Extractor-Feeders, and Gin Stand Trash, Dual Cyclones 6A and 6B	4,000	2,000	42	.0146	.49
7.	Gin Stand 1 16D Condenser Lint Cleaners, 1st and 2nd Stage	2,831	2,831	26 (vent)	.0806	1.92
8.	Gin Stand 2 16D Condenser Lint Cleaners, 1st and 2nd Stage	2,831	2,831	26 (vent)	.0861	2.05
9.	Gin Stand 3 16D Condenser Lint Cleaners, 1st and 2nd Stage	2,831	2,831	26 (vent)	.0438	1.04
10.	Gin Stand 1 Moss Condenser 3rd Stage Lint Cleaner	2,100	2,100	42 (vent)	.0078	.14

Operation Involved (Sequential)	Total Flow Rate (ft^3/min)	Flow Rate Per Emission Point (ft^3/min)	Cyclone or Exhaust Diameter (inches)	Average Outlet Concentration (gr/dscf)	Total Emissions (lbs/hr)
11. Gin Stand 2 Moss Condenser 3rd Stage Lint Cleaner	2,100	2,100	42 (vent)	.0064	.11
12. Gin Stand 3 Moss Condenser 3rd Stage Lint Cleaner	2,100	2,100	42 (vent)	.0032	.06
13. Mote Cyclone 9	2,500	2,500	30	.0234	.49
14. Mote Cyclone 10	2,500	2,500	30	.0116	.24
15. Mote Cyclone 11	2,500	2,500	30	.0203	.43
16. Mote Trash, Dual Cyclones 7A and 7B	2,500	1,250	30	.0354	.75
17. Battery Condenser Discharge	3,000	3,000	42 (vent)	.0085	.21
18. Waste Disposal Pile, Dual Cyclones 8A and 8B	2,500	1,250	36	.0644	1.36
Total Gin Emissions					11.11

Footnotes

1. During testing an average of 24,357 pounds per hour or 16.24 bales per hour was processed.
2. All cyclones are high efficiency with 2D-2D configuration.
3. All 3 gin stands utilized perforated drums with a hole diameter of .045 inches and 27% open area on the first and second stage of lint cleaning. This was purchased from Continental-Eagle Corporation.
4. On the third stage lint cleaners and battery condenser, 80 mesh screen was used with a wire diameter of .0055 inches and 31.4% open area.

ERF/F2039096

STATE OF TENNESSEE

DEPARTMENT OF HEALTH AND ENVIRONMENT

DIVISION OF AIR POLLUTION CONTROL

Halls Gin Company
Industrial Road
P.O. Box 158
Halls, Tennessee 38040

Reference Number: 49-00074

Particulate Emissions

from

Cotton Gin Exhausts

October 25-27, 1988

Submitted by: Carl Koontz
Carl Koontz
Compliance Monitoring Program

Eric R. Flowers
Eric Flowers
Air Resources Management Program

Forwarded by: Harold E. Hodges
Harold E. Hodges, P.E.
Technical Secretary
Tennessee Air Pollution Control Board

Table of Contents

		Page
1.	Introduction and Objective	1
2.	Summary of Results	2
3.	Data Summation	3-5
4.	Comments	6
5.	Sampling Train Components, Method of Use, Analytical Techniques, and Moisture Determination	7-10
6.	Process Description	11-25
7.	Pictures of Facility	26-35
8.	Sample Data and Calculations	
	a. Suck Pipe Quad Cyclone 1A	36-45
	b. Suck Pipe Quad Cyclone 1B	46-55
	c. Suck Pipe Quad Cyclone 1C	56-65
	d. Suck Pipe Quad Cyclone 1D	66-75
	e. 1B Inclined Cleaner Cyclone 2A	76-85
	f. 1B Inclined Cleaner Cyclone 2B	86-95
	g. 1A Inclined Cleaner Cyclone 3A	96-105
	h. 1A Inclined Cleaner Cyclone 3B	106-115
	i. 2B Inclined Cleaner Cyclone 4A	116-125
	j. 2B Inclined Cleaner Cyclone 4B	126-135
	k. 2A Inclined Cleaner Cyclone 5A	136-145
	l. 2A Inclined Cleaner Cyclone 5B	146-155
	m. Overflow Cyclone 6A	156-165
	n. Overflow Cyclone 6B	166-175
	o Mote Trash Cyclone 7A	176-185
	p. Mote Trash Cyclone 7B	186-195

Table of Contents

		Page
q.	Cotton Waste Disposal Cyclone 8A	196-205
r.	Cotton Waste Disposal Cyclone 8B	206-214
s.	Mote Cyclone 9	215-224
t.	Mote Cyclone 10	225-234
u.	Mote Cyclone 11	235-244
v.	Battery Condenser Discharge or Vent	245-254
w.	Gin Stand 1 (Moss)	255-264
x.	Gin Stand 1 (16D)	265-274
y.	Gin Stand 2 (Moss)	275-284
z.	Gin Stand 2 (16D)	285-294
aa.	Gin Stand 3 (Moss)	295-304
bb.	Gin Stand 3 (16D)	305-314
9.	Personnel Data	315
10.	Sample Chain of Custody Documentation	316-319
11.	Calibration Data	320-328
12.	Previous Division Regulation Specific to Cotton Gins	329

Material in the Sample Data and Calculations section of this report appears in the following order:

Field Data Form
Calculation of Airflow
Calculation of Actual Emissions
Laboratory Data Forms

Note: The forms utilized for the calculation of emission point airflow and actual emissions contain the equations used for these calculations.

Dimension drawings of each emission point sampled are contained on the field data forms.

F2019013

INTRODUCTION AND OBJECTIVE

On October 25-27, 1988 the Tennessee Division of Air Pollution Control, Compliance Monitoring Program, performed a series of twenty-eight source emissions tests at Halls Gin Company, Halls, Tennessee. The points tested were the high pressure discharge points from the high efficiency cyclone (HEC, 2D-2D) collectors and the low pressure discharge points from the Moss and 16D condenser drums serving the cotton ginning facility.

The objective of these particulate emissions source tests was to aid the Division in the development of air pollution control regulations specific to the cotton ginning industry. Additionally, the testing was conducted to determine the compliance status of the cotton gin with the Division's previous regulations relating to the cotton ginning industry, which are still currently effective at the federal level.

SUMMARY OF RESULTS

Authority to regulate the emissions from cotton gins was returned to the Tennessee Division of Air Pollution Control through an amendment to the Tennessee Clean Air Act adopted by the State Legislature during the 1988 session. In the absence of any industry specific rules in the current Tennessee Air Pollution Control Regulations the particulate emissions from any cotton gin which began operation on or after April 3, 1972 would be regulated by Rule 1200-3-7-.03 (new process emission sources) and Rule 1200-3-7-.04 (limiting allowable emissions). As the Halls Gin Company cotton gin began operation for the 1988 ginning season, these rules would be presently applicable to it.

It has been determined that the cotton gin constitutes a single process emission source. During the testing of October 25-27, 1988 the total mass emissions from the cotton gin were determined to be 11.11 pounds per hour (utilizing hi-volume source testing methodology). The minimum grain loading value of 0.0026 grains per dry standard cubic foot of effluent gas was determined from Cyclone 1A on the cyclone quad serving the unloading system. The maximum grain loading value of 0.0861 grains per dry standard cubic foot of effluent gas was determined from the 16D unit of Gin Stand 2. Thus, the lower grain loading limited, contained in 1200-3-7-.04, of 0.02 grains per dry standard cubic foot of effluent gas would not be applicable to this source.

During the testing period the average process weight through the cotton gin was 24,357 pounds per hour. From this process weight rate an allowable emission rate of 16.91 pounds per hour is calculated utilizing Table 2. Thus, the cotton gin is in compliance with the applicable process emission standard.

Formerly the Tennessee Air Pollution Control Regulations contained specific standards for cotton gins. These were contained in Rule 1200-3-7-.08 of the Regulations. A copy of these standards is incorporated as a part of this report. While this standard has been deleted from the current air pollution control regulations, this deletion was never recognized by the Environmental Protection Agency and this would be the standard cited if that agency took any direct enforcement action against a Tennessee cotton gin. From Table 4 of this former regulation and based on the process weight recorded during the testing period (24,357 pounds per hour), it is calculated that the allowable emission rate from this cotton gin would be 36.55 pounds per hour. Again, the cotton gin would be in mass compliance.

DATA SUMMATION

Halls Gin Company

Tested October 25-27, 1988

Emission Point Identification	grain loading gr/dscf	emission rate lb/hr
Suck Pipe Quad Cyclone 1A	0.0026	0.06
Suck Pipe Quad Cyclone 1B	0.0030	0.07
Suck Pipe Quad Cyclone 1C	0.0027	0.06
Suck Pipe Quad Cyclone 1D	0.0027*	0.07**
Summary for Suck Pipe Quad	0.0028	0.26
1B Inclined Cleaner Cyclone 2A	0.0135	0.30
1B Inclined Cleaner Cyclone 2B	0.0130*	0.29**
Summary for 1B Inclined Cleaner	0.0132	0.59
1A Inclined Cleaner Cyclone 3A	0.0075	0.16
1A Inclined Cleaner Cyclone 3B	0.0095*	0.20**
Summary for 1A Inclined Cleaner	0.0085	0.36
2B Inclined Cleaner Cyclone 4A	0.0061	0.11
2B Inclined Cleaner Cyclone 4B	0.0067*	0.12**
Summary for 2B Inclined Cleaner	0.0004	0.23
2A Inclined Cleaner Cyclone 5A	0.0093	0.17
2A Inclined Cleaner Cyclone 5B	0.0116*	0.21**
Summary for 2A Inclined Cleaner	0.0116	0.38

*
**Average Values
Summations

DATA SUMMATION

Halls Gin Company

Tested October 25-27, 1988

Emission Point Identification	grain loading gr/dscf	emission rate lb/hr
Overflow Cyclone 6A	0.0105	0.18
Overflow Cyclone 6B	0.0186*	0.31**
Summary for Overflow System	0.0146	0.49
Mote Trash Cyclone 7A	0.0348	0.37
Mote Trash Cyclone 7B	0.0360*	0.38**
Summary for Mote Trash System	0.0354	0.75
Cotton Waste Disposal Cyclone 8A	0.0644***	0.68***
Cotton Waste Disposal Cyclone 8B	0.0474*	0.50**
Summary for Cotton Waste Disposal System	0.0644	1.36
Mote Cyclone 9	0.0234	0.49
Mote Cyclone 10	0.0116	0.24
Mote Cyclone 11	0.0203*	0.43**
Summary for Mote Cyclones	0.0184	1.16
Battery Condenser Discharge****	0.0085	0.21

* Average Values
** Summations
*** Filter Values Only (See Comments)
**** This source is referred to as the Battery Condenser Vent in succeeding sections of this report.

DATA SUMMATION

Halls Gin Company

Tested October 25-27, 1988

Emission Point Identification	grain loading gr/dscf	emission rate lb/hr
Gin Stand 1 (Moss)	0.0078	0.14
Gin Stand 1 (16D)	0.0806*	1.92**
Summary Gin Stand 1	0.0442*	2.06**
Gin Stand 2 (Moss)	0.0064	0.11
Gin Stand 2 (16D)	0.0861*	2.05**
Summary Gin Stand 2	0.0462*	2.16**
Gin Stand 3 (Moss)	0.0032	0.06
Gin Stand 3 (16D)	0.0438*	1.04**
Summary Gin Stand 3	0.0235*	1.10**
Summary of Moss units	0.0058*	0.31**
Summary of 16D units	0.0702*	5.01**
Summary for Entire Cotton Gin	0.0217*	11.11**

*Average Values
**Summations

COMMENTS CONCERNING THE TESTING OF CYCLONE 8B

At the conclusion of the third sample run for Cyclone 8B an accident occurred which destroyed the filter for that sample run and contaminated the probe wash.

During the compilation of this report a comparison was made between the results obtained from the testing of Cyclone 8A with the filter weight gains from the first two sample runs for Cyclone 8B.

As the data obtained for Cyclone 8B is compatible with the results obtained for Cyclone 8A and since both Cyclones 8A and 8B are part of a doublet, it was determined that the sampling results obtained for Cyclone 8A would be prorated for Cyclone 8B. The SUMMARY OF RESULTS and DATA SUMMATION portions of this report reflect this decision.

EF/F1089012

SAMPLING TRAIN COMPONENTS, METHOD OF USE, AND ANALYTICAL TECHNIQUES

A. Components

1. Aluminum probe with three nozzles. One nozzle of 15/16 inch diameter, one nozzle of 1 7/8 inch diameter, and the third nozzle of 1 1/2 inch diameter.

2. In-line filter of 0.3 micron porosity.

3. In-line orifice with pressure differential gauge of two inches water range and temperature gauge of appropriate scale.

4. Butterfly valve to control flow through sampling train.

5. Flexible hose from the train to fan.

6. Centrifugal fan.

B. General Sampling Procedure

1. Leak checks confirmed the sampling equipment was sufficiently gas tight for the tests.

2. Isokinetic sampling was accomplished using a standard pitot tube and charts that were generated from graphs provided by the sampler manufacturer.

3. When practicable, samples were taken at multiple points across the exit gas stream. Samples were taken only at points of outgoing flow and where isokinetic sampling was achievable.

4. The durations of the sampling periods depended upon the duration of operation of the process and the estimate rates of loading of the filters.

5. Moisture content of the gas stream was determined by taking the dry and wet bulb temperatures of the gas.

C. Analytical Techniques

1. Before sampling, the filters were exposed to room conditions with a humidity of less than fifty percent and allowed to reach equilibrium with the room conditions. the filters were then weighed to the nearest 0.1 mg.

2. After each sampling run, material deposited on the inside wall of the sampling probe and sampling train ahead of the filter was brushed from the probe onto the filter. After each test, a series of 3 runs, any remaining material deposited on the inside wall of the probe and filter holder was washed by acetone into a beaker and collected as probe wash. The filters were exposed to room conditions with a humidity of less than fifty percent and allowed to reach equilibruim with the room conditions. The filters were then weighed to the nearest 0.1 mg. The probe wash was transferred to a tared beaker, evaporated in an oven at 130°F, cooled in a desiccator, and weighed.

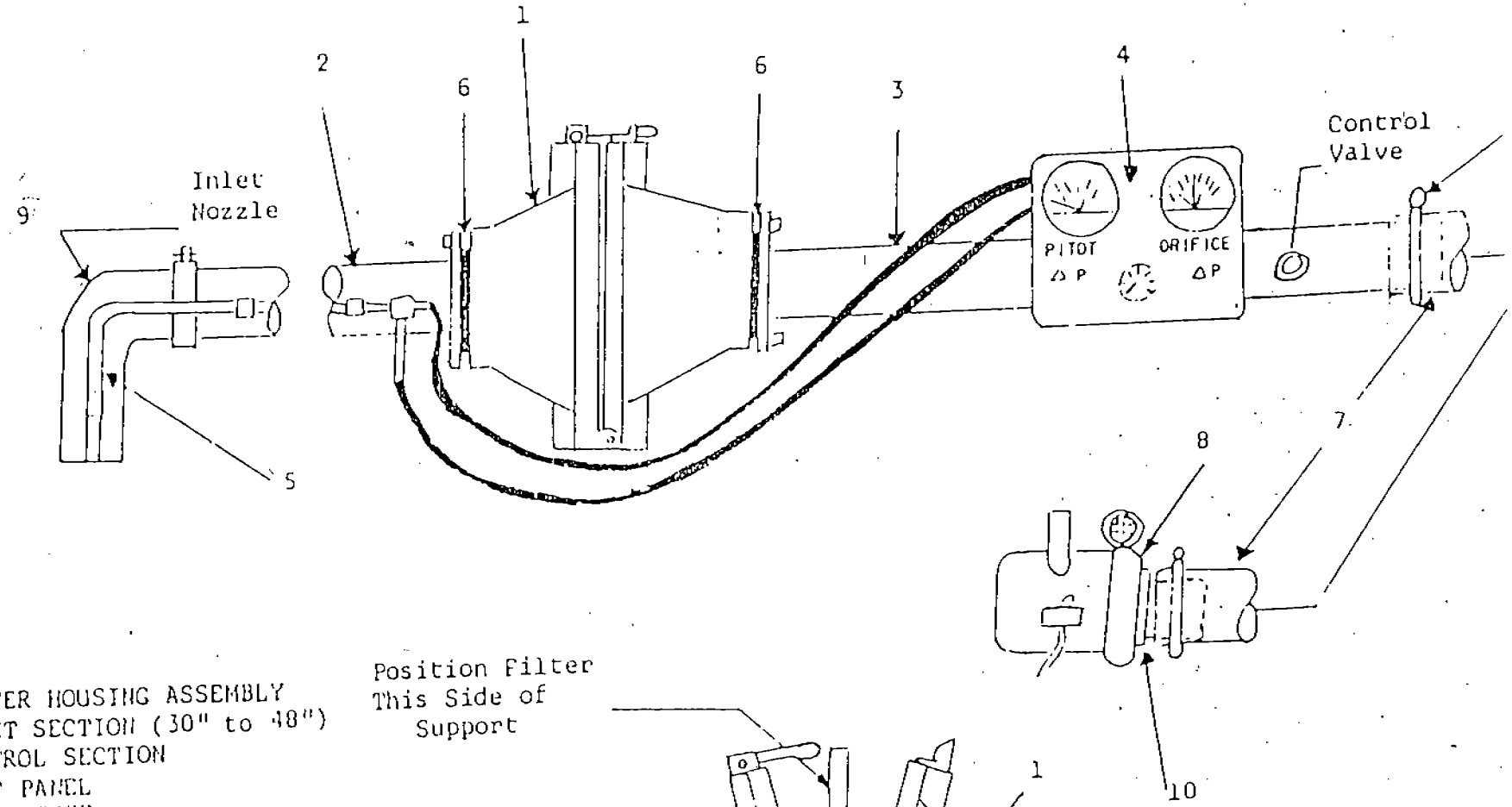

1. FILTER HOUSING ASSEMBLY
2. INLET SECTION (30" to 48")
3. CONTROL SECTION
4. TEST PANEL
5. PITOT TUBE
6. MANIFOLD GASKETS
7. FLEX HOSE
8. SUCTION BLOWER
9. INLET NOZZLE
10. BLOWER HOSE ADAPTOR
11. HOSE CLAMPS

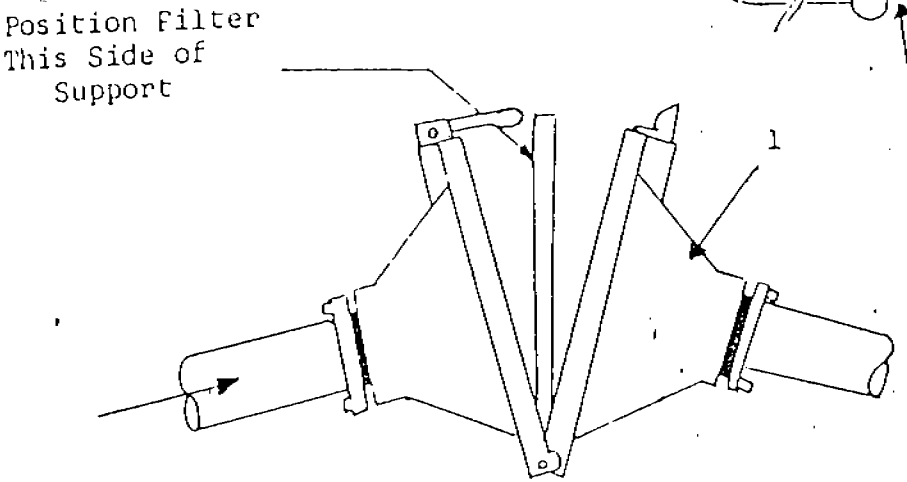

DETERMINATION OF EFFLUENT GAS MOISTURE CONTENT

The Tennessee Air Pollution Control Regulations requires that grain loadings be determined on a dry basis. Therefore, it was necessary to determine the moisture content of each exhaust gas stream sampled in order to correct the given flows to dry conditions. This was accomplished by taking a wet bulb temperature for each exhaust gas stream sampled. Then, following the saturation line of a psychrometric chart, each wet bulb temperature is matched with its corresponding moisture content. The psychrometric chart used for the moisture determinations for the testing conducted at Halls Gin Company follows this page of the report.

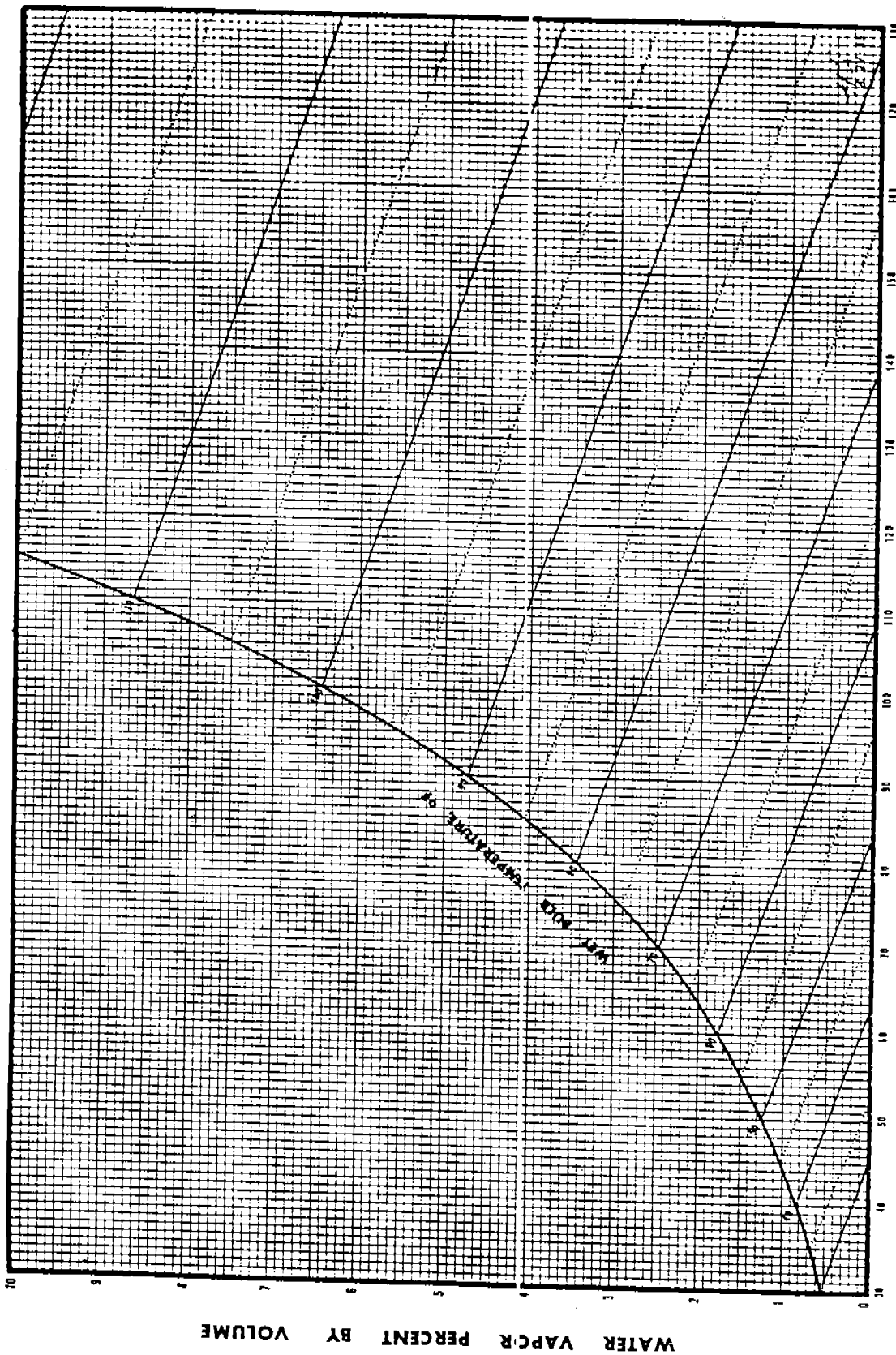

Figure D8. Psychrometric chart expressing volume of water vapor by %.

Process Observation During Particulate Emission Testing at Halls Gin Company

Reference Number: 49-00074

Test Dates
October 25 - 27, 1988

Eric R. Flowers

I. Gin Description

Halls Gin Company is a newly constructed cotton gin which produced its first bale of cotton early in October 1988. Mr. Tom Hammond and Mr. Miller Pounds selected gin machinery and equipment for the new gin and are in charge of gin management. Mr. Bob Marshall of Covington, Tennessee was responsible for designing the gin, selecting and installing air pollution control devices, and managing the mechanical operation during the first season. Halls Gin has a capacity to handle 7 1/2 bales per hour for each of the three gin stands for a total capacity of 22 1/2 bales per hour. The location of the gin is in the Halls Industrial Park in Lauderdale County, just northwest of Halls and about 10 miles south of Dyersburg.

II. Process Description

A. Layout and Flow Diagram

Figure 1 depicts the layout of Halls Gin Company showing operations and equipment. Figure 2 is a flow diagram of how the cotton is ginned, tracing basic steps which include unloading of raw cotton, drying, cleaning, related processing, and baling of the cotton (the final product). The flow pattern of handling trash, byproducts, and emissions to the atmosphere is also depicted. Figure 3 is a diagram of the emission points at the gin.

B. Composition of Cotton

Cotton processed at Halls Gin Company is picker harvested cotton. This is a taller plant than the western "stripper-harvested" variety. A spindle picker harvests the cotton by removing cotton from the bur with rotating spindles, leaving unopened bolls on the plant and collecting fewer amounts of leaves, burs, and trash than stripper cotton.

Spindle picked cotton has the following approximate composition for a typical 1500 pound load.

Component	Weight (lbs)	Weight Percent (%)
Seed	800	53.3
Lint Cotton (bale)	495	33.0
Trash	158	10.5
Moisture	25	1.7
Motes	22	1.5
Total	1500	100.0

As can be seen from the above analysis, a 495 pound bale of lint cotton is recovered from 1500 pounds of spindle picked cotton. The above composition may vary especially due to actual trash content and moisture content. Besides lint cotton there are two other basic byproducts. Seed is sold as a separate product. Motes, which are basically immature seeds, are cleaned, baled, and sold for use as upholstery stuffing.

C. Process Operations

The purpose of a cotton gin is to separate cotton fibers (lint) from the cotton seed and to remove the trash from the lint. This is an essential function before cotton will be acceptable for use in the textile industry.

At Halls Gin Company this is accomplished in the following sequential manner.

1. Weighing and Unloading Stations

Trailers are previously weighed or weighed at the scale house without a load. The loaded trailer (gross weight) is then recorded and the difference in weight (tare weight) represents the weight of cotton. The loaded trailers are ticketed and brought into a two lane bay area inside the gin building. Here one trailer at a time is unloaded by means of a manually operated telescoping suction pipe (suck pipe). The number of bales of cotton per trailer load is typically between 6-14 and the time to unload a trailer varies normally between 25 to 58 minutes depending on operator ability, load size, and mechanical problems in the gin. Modules of cotton which have a protective covering are also unloaded in the bay area. Raw cotton is exhausted through the suction pipe to a 72 inch dual separator and feed control unit. The screen in the separator removes seed cotton from the conveying air allowing the cotton to fall into the feed control unit. Air and trash from the separator are exhausted to a quad cyclone unit consisting of Cyclones 1A, 1B, 1C, and 1D. The feed control unit functions to prevent choking in the seed cotton cleaners, evenly distributes cotton to the dryers and cleaners, and helps minimize time loss between bales.

2. Seed Cotton Cleaning System

A split tower dryer (primary drying system) unit receives seed cotton (cotton with seed intact) from the feed control unit. These 52 inch Murray dryers are heated by natural gas. Ideally, cotton is dried between 6.5 to 8.0% moisture. At Halls Gin the moisture content is typically 7 to 7.5%.

From the primary dryers, cotton is sent to two parallel systems of 72 inch inclined cleaners and stick and green leaf machines. Inclined Cleaner 1A and Stick Machine 1A are in parallel with Inclined Cleaner 1B and Stick Machine 1B. The inclined seed cotton cleaners open up the cotton and break up large clumps of cotton and then remove fine particle trash consisting of sand, dirt, and miscellaneous trash. From the inclined cleaners the seed cotton is further cleaned by an extractor or stick and green leaf machine. Centrifugal force from high-speed saw cylinders spin off large trash including sticks, stems, and burs from seed cotton. Fiber is retained on the saw. Air and

trash from Inclined Cleaner 1B and Stick Machine 1B and from Inclined Cleaner 1A and Stick Machine 1A are exhausted to dual Cyclones 2A and 2B and Cyclones 3A and 3B, respectively.

Seed cotton is further dried in a secondary tower dryer system (52 inch Murray dryers) before routing to two parallel sets of inclined and impact cleaners. Cotton from the 1A system is sent to Inclined Cleaner 2A and Impact Cleaner 2A while 1B cotton is sent to Inclined Cleaner 2B and Impact Cleaner 2B. The 72 inch impact cleaners release the seed cotton to a 14 inch conveyor distributor. Seed cotton is then evenly distributed among three extractor-feeders routing seed cotton to each of three gin stands. Dual Cyclones 4A and 4B and dual Cyclones 5A and 5B handle air and trash from Inclined Cleaners 2B and 2A respectively.

3. Overflow System

When the flow of seed cotton from the conveyor distributor exceeds that able to be received from the gin stands, excess cotton is bypassed to an overflow hopper system. Seed cotton from the overflow hopper is pneumatically conveyed to a 50 inch separator returning seed cotton to the conveyor distributor. Cotton is then fed by extractor-feeders to the gin stands as needed.

Air and trash from the overflow separator, impact cleaners, extractor-feeders, and gin trash are routed to large dual Cyclones 6A and 6B.

4. Lint Cotton Handling System

The conveyor distributor apportions cotton to each of three parallel Continental 141 gin stands by means of three extractor-feeders. Each gin stand has a capacity of 7 1/2 bales per hour. The gin stand is the heart of the gin and utilizes the original basic ginning principle invented by Eli Whitney, the spiked tooth gin. Saw teeth pass between gin ribs. Fibers are pulled from the seed rather than cut since the leading edge of the saw teeth is parallel to the rib.

Cotton enters each gin stand system through a huller front where secondary cleaning occurs. The saws hold and draw out the cotton through widely spaced huller ribs causing hulls and sticks to fall out of the machine. Cotton locks are then drawn to the bottom of a roller box from the huller ribs.

The ginning process separating the lint and seed occurs in the roll box. After seeds are cleaned (fibers removed), they slide down the gin ribs and fall into a 6 inch seed line. Seeds are pneumatically conveyed from a vacuum box to a seed storage house. Lint cotton (seed cotton no longer exists at this stage) from the saw is removed by brushes known as doffing.

From here lint cotton is conveyed to a condenser screen drum that forms a lint batt. The batt is then fed to the first set of saw lint cleaners. Saws transport cotton over grid bars and combined with centrifugal force remove immature seeds with short immature fibers (motes) and comb the lint removing leaf particles, grass, and other foreign matter. Cleaned lint is taken off the saw by a rotating brush which also provides air to convey the lint to the second stage lint cleaner. Continental Sixteen D (16D) 66 inch 4C units are used at Halls Gin on the first and second stage lint cleaners. Lint is further cleaned by a third stage lint cleaner. Gin Stands 1 and 3 have 66 inch Continental units with Moss condensers as third stage lint cleaners. Gin Stand 2 is a Constellation unit. Eighty (80) mesh wire cloth cover all three Moss condenser drums. The 16D perforated drums have .045 inch diameter holes.

The first and second stage lint cleaners from the three gin stands vent lint fly and fine dust to three separate low pressure 26 inch diameter goose-necked exhaust vents. Similarly, the three Moss condensers vent emissions to three separate 42 inch diameter vents.

5. Mote System

Motes from all three stages of lint cleaning from each gin stand are pneumatically conveyed from three lines to three separate mote cyclones identified as Cyclones 9, 10, and 11. A common hopper serves these three cyclones. A single line from the hopper transports motes to the mote cleaner. A hopper under the cleaner collects trash from the motes, roughly 50% of the material, and returns it to Cyclones 7A and 7B at the main cyclone bank. Cleaned motes are then compressed in the mote press and baled as a product ready for shipping.

6. Battery Condenser and Bale System

Lint after being cleaned from the three stages of lint cleaners is blown through a trunk-line to a 54 inch Moss battery condenser. The condenser drum is covered with 80 mesh screen to minimize emissions. A single 42 inch diameter goose-necked vent serves this low pressure exhaust. The slow turning screened drum forms a lint batt which is routed between doffing rollers to a lint slide. The slide feeds the lint batt to a baling press, packing the lint cotton in a bale ready for shipment. Bales during the days of observation ranged in weight between 448 and 514 pounds.

7. Waste Disposal System

The main cyclone bank (cyclone sets 1 through 7) discharge trash and heavy material from the base trough of the cyclones to a trash fan. This fan blows the waste to dual Cyclones 8A

and 8B above a waste disposal pile. Waste from these two cyclones is emptied to a screw conveyor which discharges the material to a waste pile about 15 feet above the ground. Two spray nozzles direct water to the cotton trash as it is augered on top of the pile. This further reduces emissions to the atmosphere.

III. Process Weight Rate and Field Notes

The following weights of raw cotton were recorded during the periods of emission testing.

Date of Testing	Time	Total Weight (lbs)	Elapsed Time (hrs)	Process Weight Rate (lbs/hr)	Bales/Hour @ 1500 lbs. per Bale
10/25/88	9:46 AM - 1:47 PM	93,060	4 1/60	23,168	15.45
10/26/88	8:46 AM - 5:15 PM	212,640	8 29/60	25,066	16.71
10/27/88	7:46 AM - 3:24 PM	189,590	7 38/60	24,837	16.56

The average process weight rate during the three days of testing calculated to be 24,357 lbs/hr or 16.24 bales per hour.

The above values were determined by utilizing weight tickets for each trailer load and timing the beginning and end of the loading as close as possible to the actual stack emission testing periods.

A random check of bale press times was made. The following times were measured at the bale press station.

Time to Form One Bale (minutes and seconds)	Bales Per Hour
3:50	15.65
2:50	21.18
3:22	17.82
3:30	17.14

This averages to be 17.94 bales per hour and is reasonably close to long range weight measurement over the three day period.

During actual operation it is not uncommon to observe periods of delay at the suction pipe due to mechanical problems in the gin machinery. In some cases, the suction pipe operator could not continue the unloading of the trailer. These delays were normally a few minutes.

Specific timed periods to unload the following various sized trailer loads were recorded.

Number of Bales in Trailer Load	Minutes to Unload by Suction Pipe	Bales Per Hour
7	25	16.80
	29	14.48
9	30	18.00
	32	16.88
	35	15.43
11	42	15.71
	45	14.66
	45	14.66
12	37	19.46
13	38	20.53
	58	13.45
14	46	18.26

This averages to be 16.53 bales per hour which is very close to the average of three days of testing of 16.24 bales per hour.

With regard to gin operation during testing, the first stage lint cleaner on Gin Stand 1 was out of commission the entire period of testing. According to gin operator Bob Marshall, this was believed to have little effect on the emissions since further stages of lint cleaning performed adequately.

IV. Factors Affecting Emissions

Spindle picked cotton, as stated previously, has much less trash than the machine stripper harvested variety. The typical composition of trash in spindle picked cotton is as follows:

Trash Component	Weight Percent of Total Trash (%)	Weight Per 1500 Pound Load (lbs)
Leaves and Dirt	50	79.0
Burs	35	55.3
Stick	15	23.7
Total Trash	100	158.0

Raw cotton varies locally in trash content and resulting bales of lint cotton ranged in weight between 448 and 514 pounds indicating varying trash and moisture content.

The cotton gin emissions measured represented normal gin emissions because this was a first harvest. Second harvest cotton contains more foreign material. Thus, the resulting emissions did not represent the worst case emissions of the season.

Because the ginning operation uses pneumatic methods to handle seed cotton, lint cotton, cotton seeds, and trash, the conveyed material must be physically separated from the air at various stages of operation.

Emissions are enhanced due to air flow from the high pressure system (cyclones) and numerous fans on the low pressure exhaust vents (condensers, lint cleaners, etc). Emissions from cyclones serving the unloading station, inclined cleaners, stick machines, overflow system, and trash fan are primarily dust and fine leaf trash. Emissions from the gin stand, lint cleaners, mote fan, and battery condensers contain lint fly and cotton dust. Additionally, cotton dust contains some amounts (less than 1%) of pesticides, defoliants, and dessicants. DEF is a typical defoliant used for cotton in West Tennessee.

With respect to various phases of operation the uncontrolled estimated emission factors obtained in EPA's emission factor publication AP-42 can be compared to actual controlled emissions measured during testing. The chart below reflects the findings.

Operation	AP-42 Uncontrolled Emissions (lbs/bale)	Uncontrolled Emissions Prorated in (lbs/hr)	Actual Emissions (lbs/hr)	Actual Emissions (lbs/bale)	Control Efficiency (%)
Unloading fan	5.0	81.20	.26	.016	99.7
Cleaners and dryers	.3				
Stick Machines	.2				
Total	.5	8.12	1.56	.096	80.8
Miscellaneous (including trash fan, overflow fan, lint cleaners, mote fan, and battery condenser)	1.5	24.36	9.29	.572	61.9
Total for gin	7.0	113.68	11.11	.684	90.2

Unfortunately due to manpower and time constraints, individual uncontrolled emissions for each operation were not measured. This would have involved sampling inlet concentrations prior to cyclone control on high pressure exhausts. Concentrations measurements prior to low pressure exhaust control would have been more difficult to sample. All duct and locations of lint and dust entry points before cleaning would have to be pinpointed and sampled to obtain precleaning values on the low pressure system. The above uncontrolled emissions were utilized from previous test data compiled by EPA. Process operations were ranked in order of the magnitude of pounds per hour released to the atmosphere after controls.

	Operation Involved	Emission Rate lbs/hr
1.	Gin Stand 2 16D Condenser Lint Cleaners, 1st and 2nd Stage	2.05
2.	Gin Stand 1 16D Condenser Lint Cleaners, 1st and 2nd Stage	1.92
3.	Waste Disposal Pile, Dual Cyclones 8A and 8B	1.36
4.	Gin Stand 3 16D Condenser Lint Cleaners, 1st and 2nd Stage	1.04
5.	Mote Trash, Dual Cyclones 7A and 7B	.75
6.	Inclined Cleaner 1B and Stick Machine, Dual Cyclones 2A and 2B	.59
7.	Overflow Separator, Conveyor Distributor, Impact Cleaners, Extractor-Feeders, and Gin Stand Trash, Dual Cyclones 6A and 6B	.49
8.	Mote Cyclone 9	.49
9.	Mote Cyclone 11	.43
10.	2A Inclined Cleaner, Dual Cyclones 5A and 5B	.38
11.	1A Inclined Cleaner and Stick Machine, Dual Cyclones 3A and 3B	.36
12.	Unloading Pipe, Quad Cyclones 1A, 1B, 1C, and 1D	.26
13.	Mote Cyclone 10	.24
14.	2B Inclined Cleaner, Dual Cyclones 4A and 4B	.23
15.	Battery Condenser Discharge	.21
16.	Gin Stand 1 Moss Condenser 3rd Stage Lint Cleaner	.14
17.	Gin Stand 2 Moss Condenser 3rd Stage Lint Cleaner	.11
18.	Gin Stand 3 Moss Condenser 3rd Stage Lint Cleaner	.06
	Total	11.11

It should be noted that significant amounts of fine dust are released from the first and second stage lint cleaners. The 16D perforated condenser drums are used on these emission points. According to gin literature, for every bale of cotton processed, the first stage of lint cleaning removes about 20 pounds of lint and foreign matter, the second stage 10 pounds, and the third stage 6 pounds. Thus, when comparing emissions combined from the first and second stage which vent to a single exhaust to that of the third stage exhaust, the third stage emissions were found to be between 5-7% of that emitted from the first and second stage. This exceeds expections of emission reductions estimated to be 20% (6/30 ths) of the previous stages. Thus, 80 mesh screen coverings on the Moss condenser units apparently do a better job in removing lint than the 16D perforated drums. This appears to be due in part to the smaller hole size of the 80 mesh screen which is able to filter finer sized particles resulting in a higher collection efficiency.

The overall collection efficiency of Halls Gin can be determined by comparing total gin emissions and bales per hour processed during testing to the EPA uncontrolled emission factor of 7 lbs. per bale of cotton. This is calculated as follows:

Actual Emissions:

$$\frac{11.11 \text{ lbs/hr}}{16.24 \text{ bales/hr}} = .68 \text{ lbs/bale}$$

Overall Control Efficiency:

$$\frac{7-.68}{7} = \frac{6.32}{7.00} = 90\% \text{ control}$$

This represents very good control in comparison to typical existing gins.

V. Air Pollution Control Equipment and Techniques

Each stage of the ginning process releases its own magnitude and type of emissions. Some phases of the operation differ significantly in the amount of uncontrolled emissions. Due to the conveying and fan requirements, the air flow volume will also vary somewhat.

As has been stated, cyclones handle the high pressure exhaust. Large particles consisting of trash and dust are efficiently collected by cyclone collectors.

The cyclones at Halls Gin are small diameter, high efficiency cyclones (HEC) due to the pencil shaped configuration. The ratio of the cone length to cyclone diameter is 2:1. The body length to cyclone diameter is also 2:1. This is known as the original Atomic Energy Commission design or 2D/2D cyclone design. This is shown in Figure 4 and is the preferred design in the Cotton Ginners' Handbook. A collection efficiency greater than 99.8% by weight has been obtained for this type of cyclone design for particles above 125 um. Cotton trash is practically 100% above 30 um diameter size thus, a high collection efficiency is expected.

Most of the low pressure exhaust system utilize fine mesh screen cover on condenser drums to minimize emissions. Standard 80 mesh stainless steel wire is used to cover the three Moss third stage lint cleaners. This wire cloth is durable fine mesh screen and does not tear or develop holes as easily as the finer 100 mesh which has a smaller wire diameter. Also, back pressure which jams batts of cotton occurs more frequently with 100 mesh screen. Many ginners prefer 80 mesh over the 100 mesh because of these reasons. Eighty (80) mesh is also used on the battery condenser. The 80 mesh utilized at Halls Gins has a wire diameter of .0055 inches with a 31.4% open area. This particular screen size and wire gauge has been reported to tear less often than other grades of 80 mesh and is reliable according to people who have installed this grade in cotton gins.

The first and second stage lint cleaners utilize perforated metal drums on the Sixteen D units. These have .045 inch diameter holes with a 27% open area. There are 169 holes per square inch. This 20 gauge galvanized steel was purchased from Continental Eagle Corporation of Prattville, Alabama.

The short fiber and fine lint fly from condensers are sometimes the source of complaints of residents and gin workers. The lint fly settles on nearby structures and can be a housekeeping and respiratory nuisance. For this reason, it is quite important to utilize fine mesh screen over condensers. This is accomplished by using the 80 mesh screen at Halls Gin.

The waste disposal pile is a well managed pile. In addition to the dual cyclone system above the pile, two spray nozzles direct a mist on waste as it is augered on to the pile. Wetted material reduces the airborne fine dust from the pile and helps minimize the possibility of complaints of blowing pile dust.

ERF/F1019024

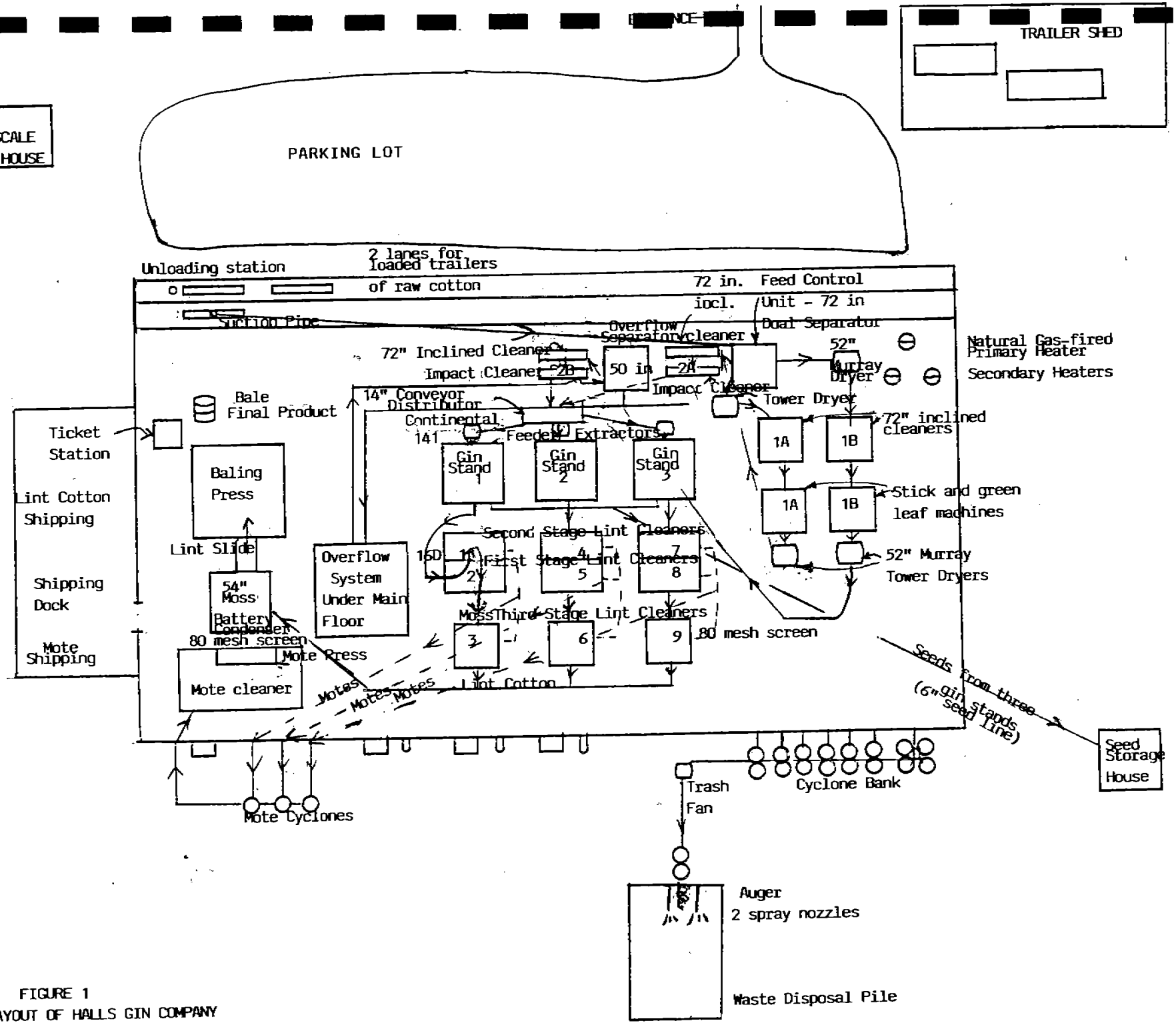

FIGURE 1
LAYOUT OF HALLS GIN COMPANY

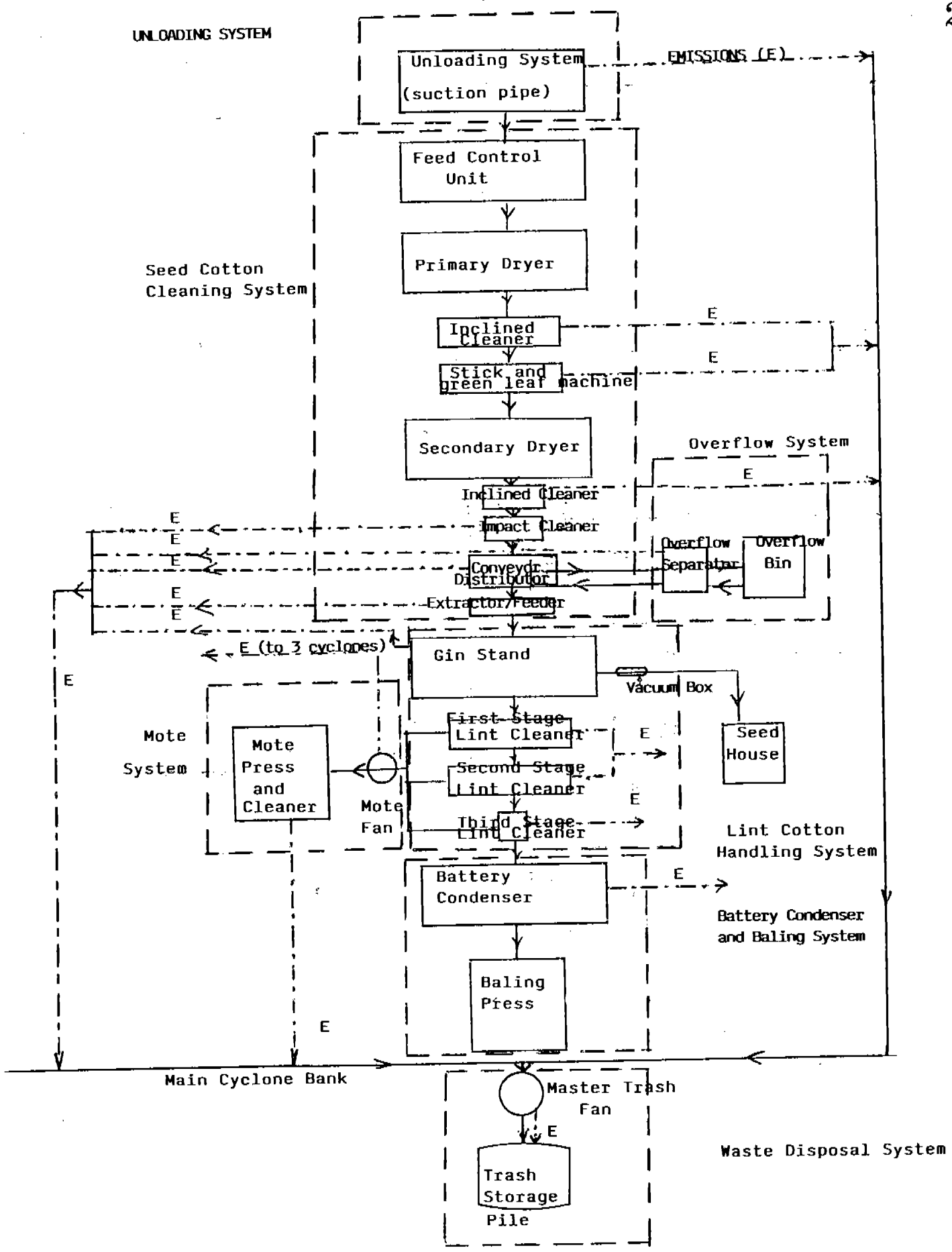

FIGURE 2
FLOW DIAGRAM OF GIN STEPS AND EMISSIONS ROUTING E ——·——·——

FIGURE 3: EMISSION POINT DIAGRAM

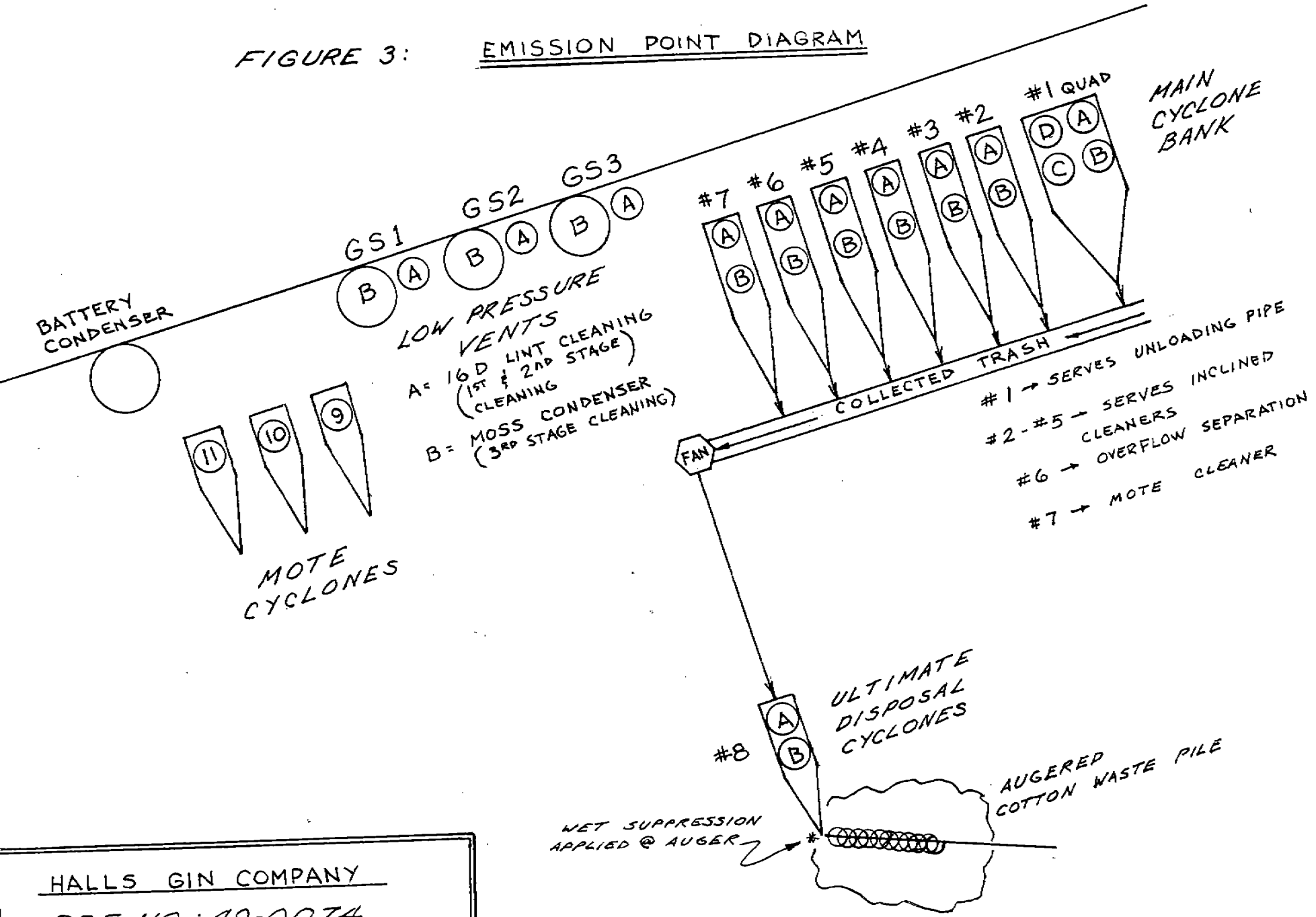

HALLS GIN COMPANY
REF NO.: 49-0074
HALLS, TENNESSEE

Figure 4

TECHNICAL BULLETIN NO. 1439, U.S. DEPT. OF AGRICULTURE

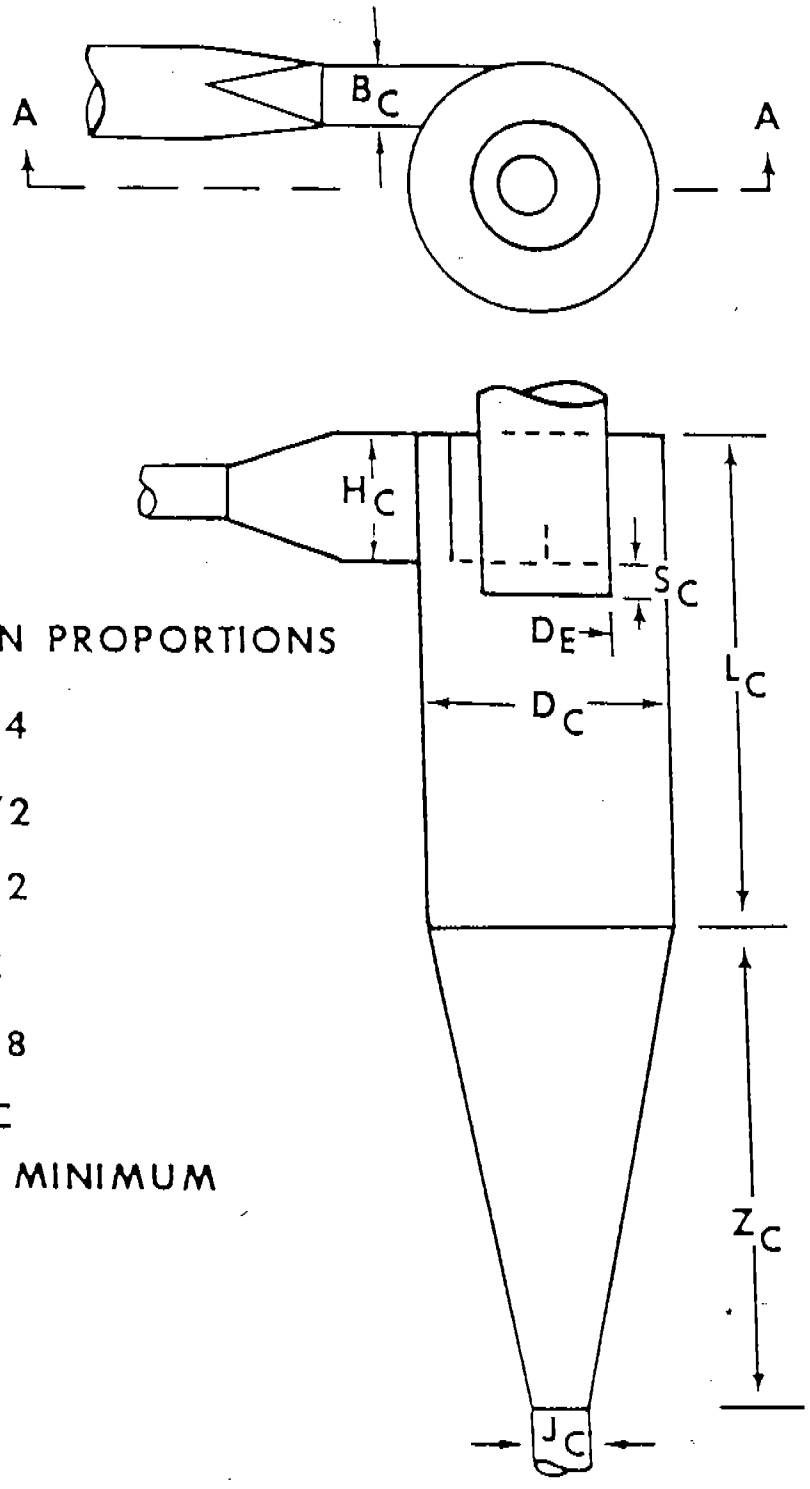

CYCLONE DESIGN PROPORTIONS

$B_C = D_{C/4}$

$H_C = D_{C/2}$

$D_E = D_{C/2}$

$L_C = 2D_C$

$S_C = D_{C/8}$

$Z_C = 2D_C$

J_C = 12" MINIMUM

Relative dimensions for an Atomic Energy Commission, small-diameter cyclone.

PHOTOGRAPHIC SUMMARY

OF

HALLS GIN COMPANY

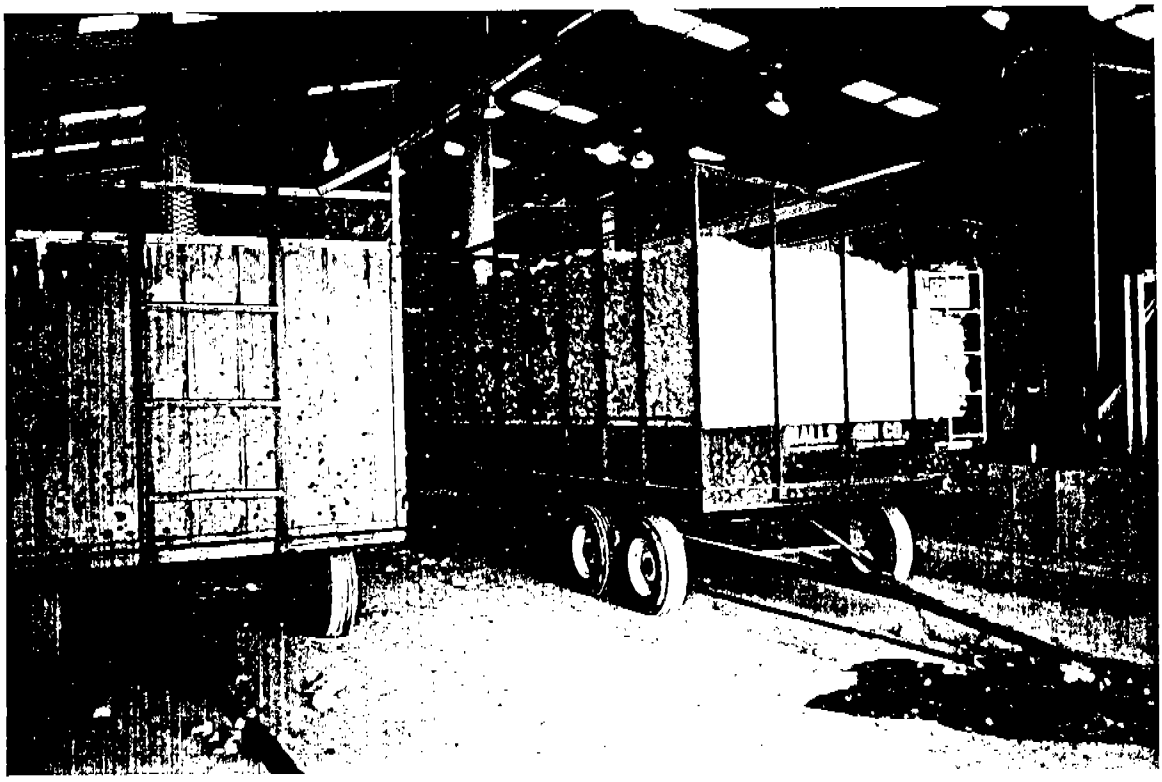

PHOTO 1
UNLOADING COTTON STATION DEPICTING TRAILERS LOADED
WITH RAW COTTON AND SUCTION PIPE

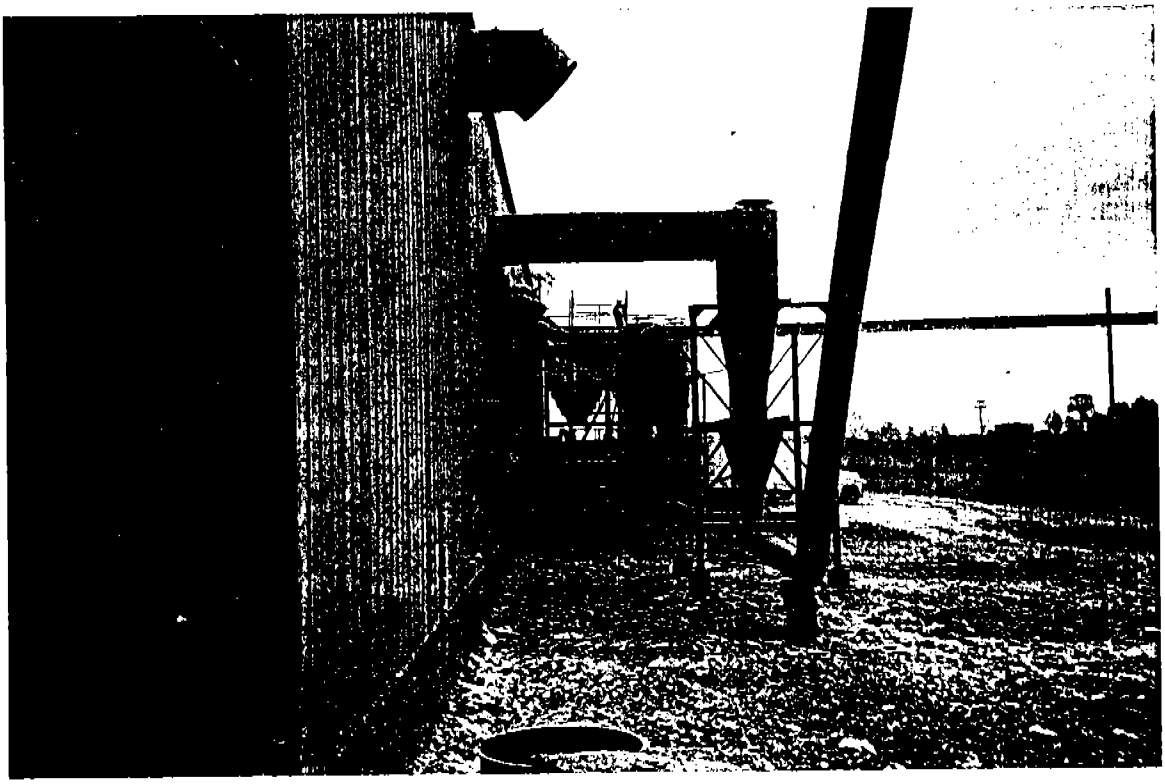

PHOTO 2
EMISSION VENTS SHOWN BEHIND THE GIN BUILDING, LOW
PRESSURE EXHAUST AND HIGH PRESSURE EXHAUST (CYCLONES)

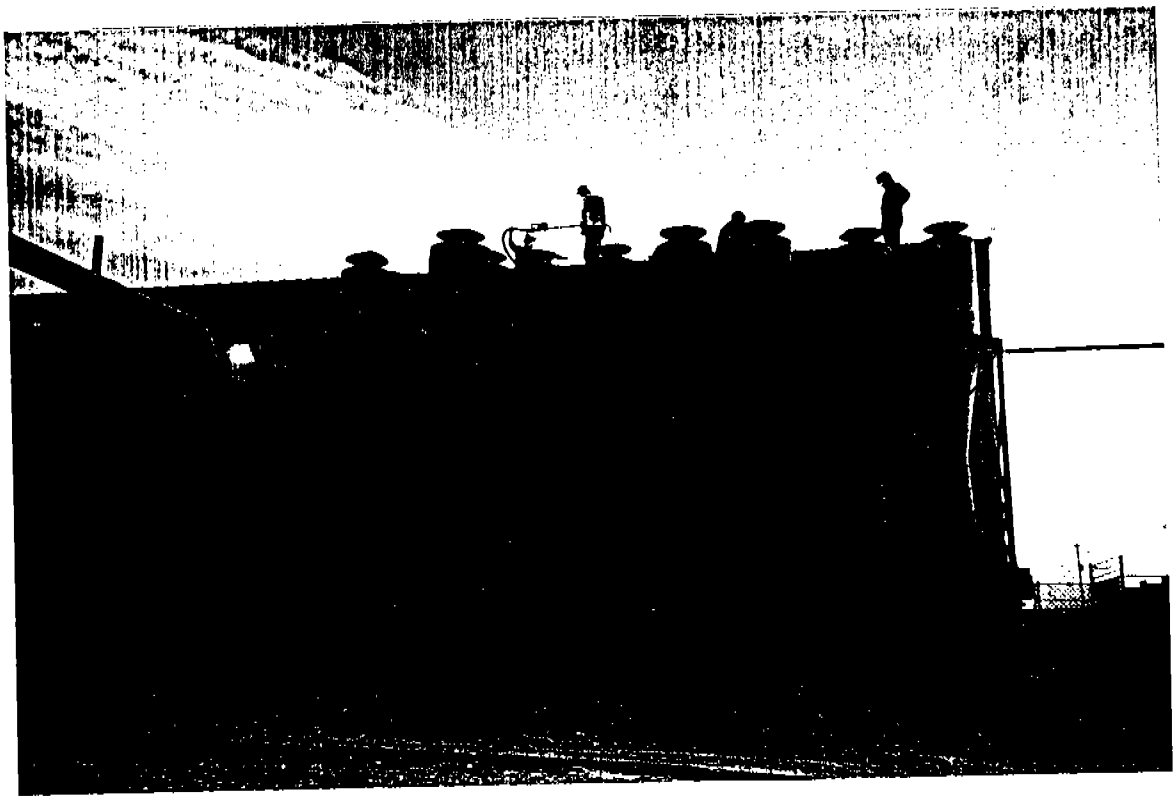

PHOTO 3
CYCLONE BANK WITH TRASH TROUGH AND TRASH FAN NEAR GROUND. THE QUAD CYCLONE HANDLES SUCTION PIPE EMISSIONS

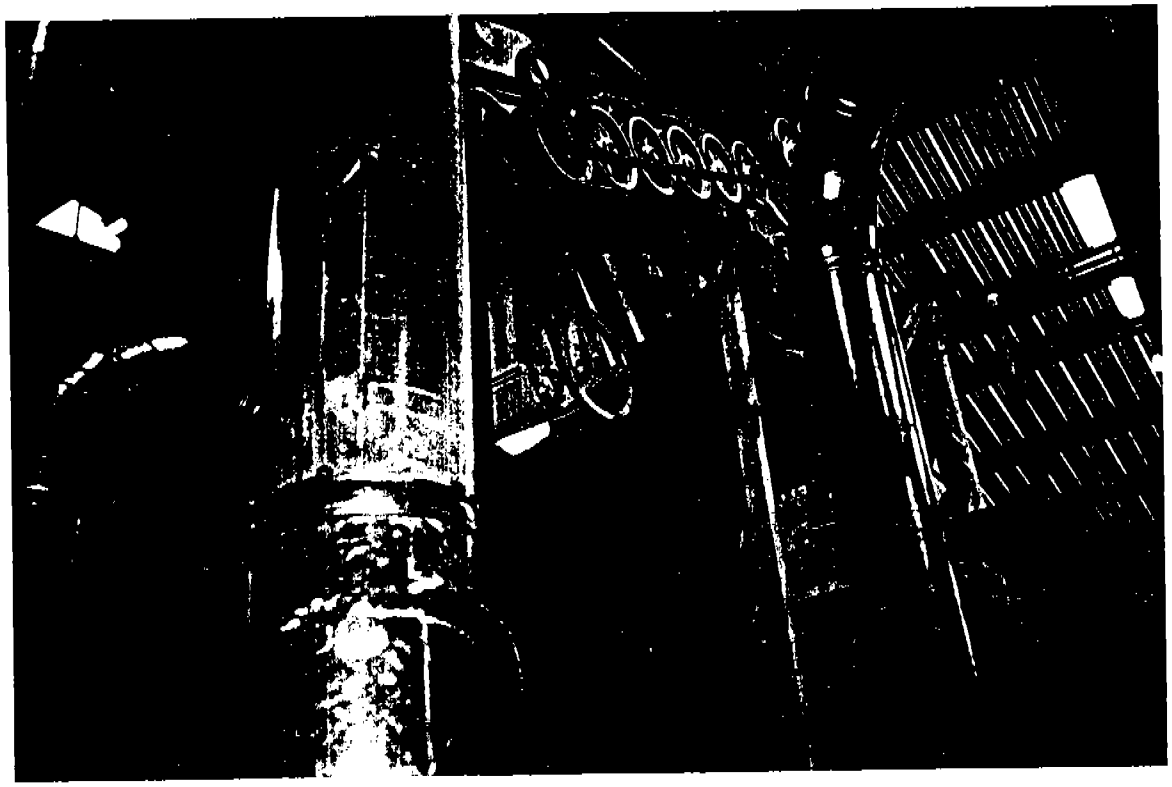

PHOTO 4
INCLINED CLEANER OVER STICK AND GREEN LEAF MACHINES

PHOTO 5
IMPACT INCLINED CLEANERS, CONVEYOR DISTRIBUTOR,
AND FEED CONTROL UNIT ABOVE GIN STAND 3

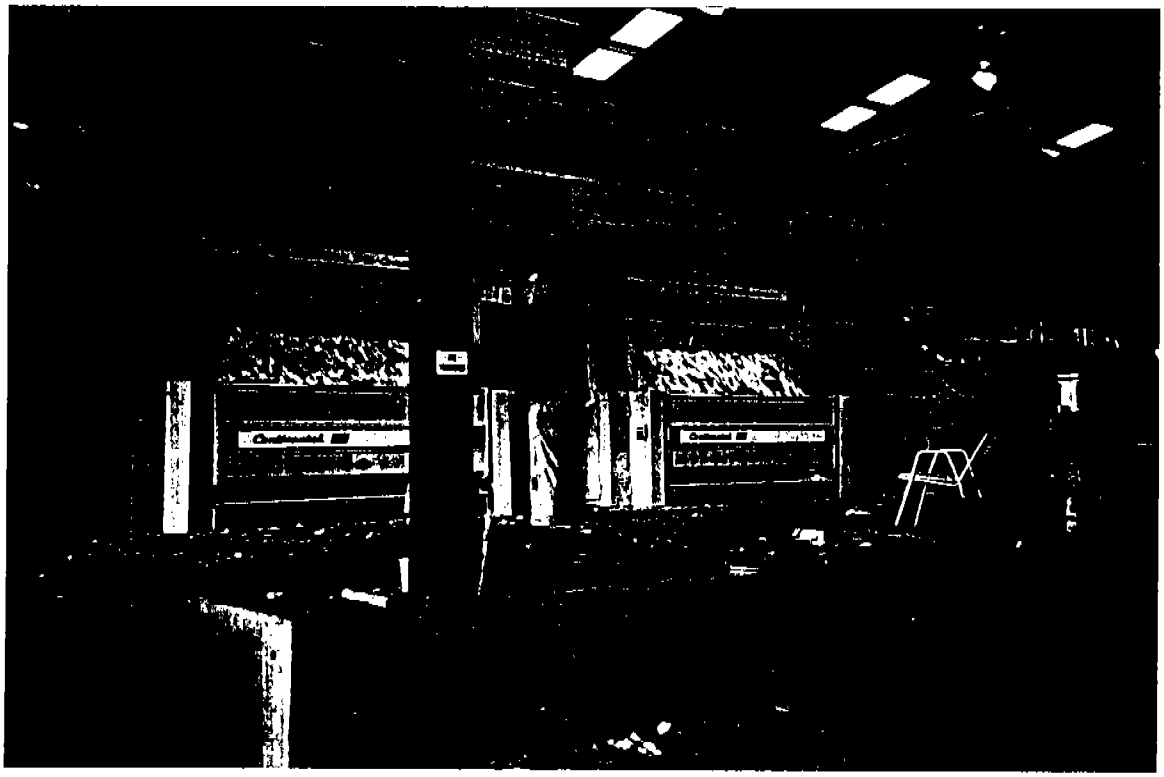

PHOTO 6
GIN DESIGNER BOB MARSHALL OVERLOOKING 3 GIN STANDS

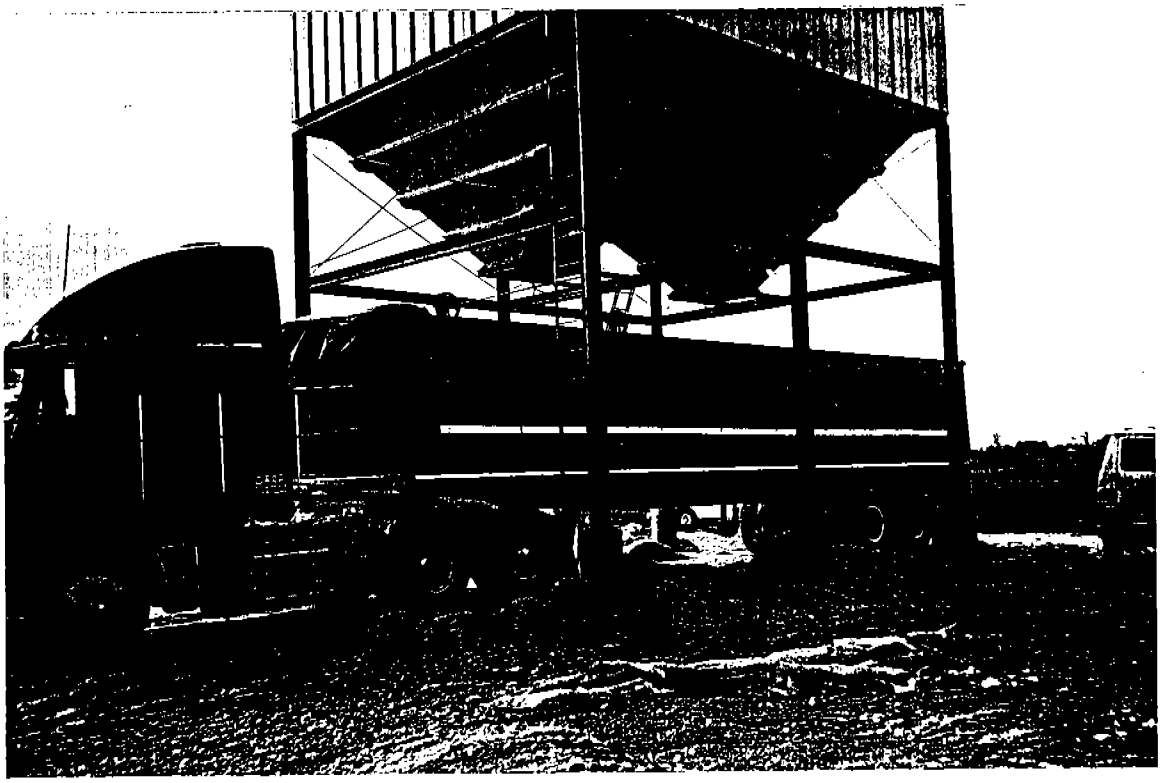

PHOTO 7
SEED STORAGE HOUSE

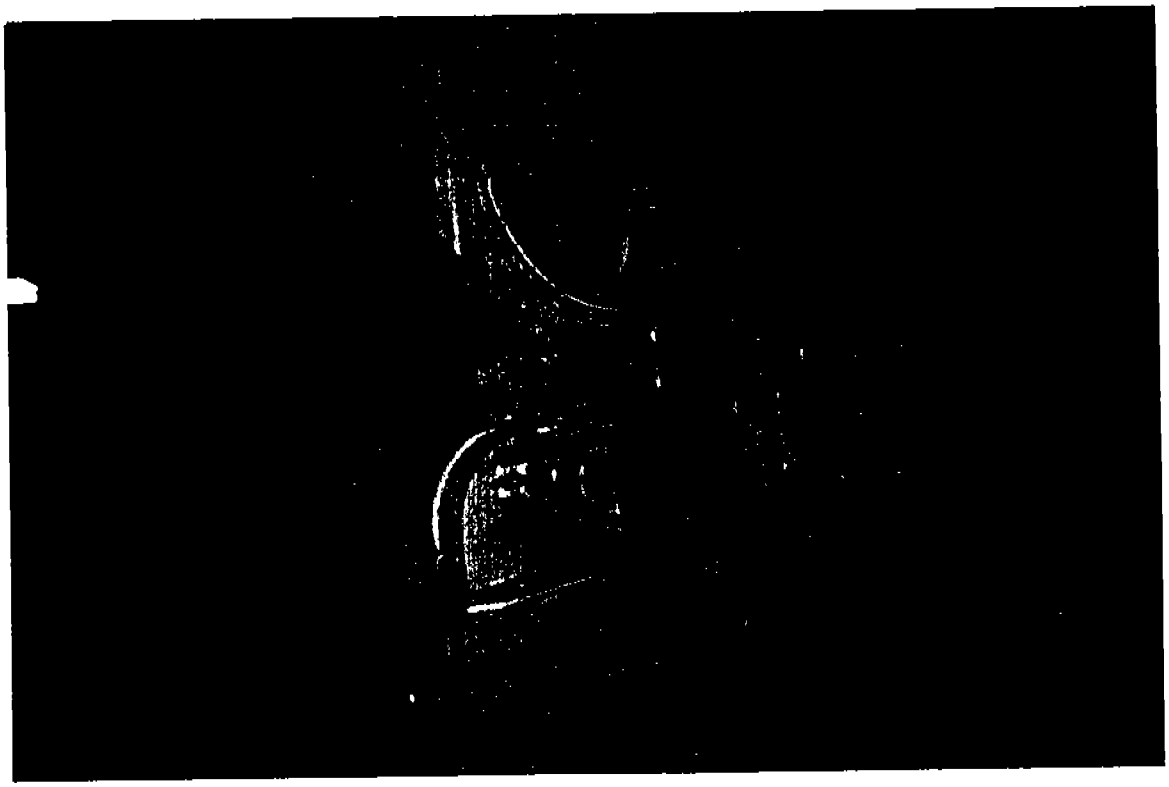

PHOTO 8
FIRST AND SECOND STAGE LINT CLEANERS,
CONTINENTAL 66 "INCH" 4C UNITS, WITH 16D PERFORATED DRUMS

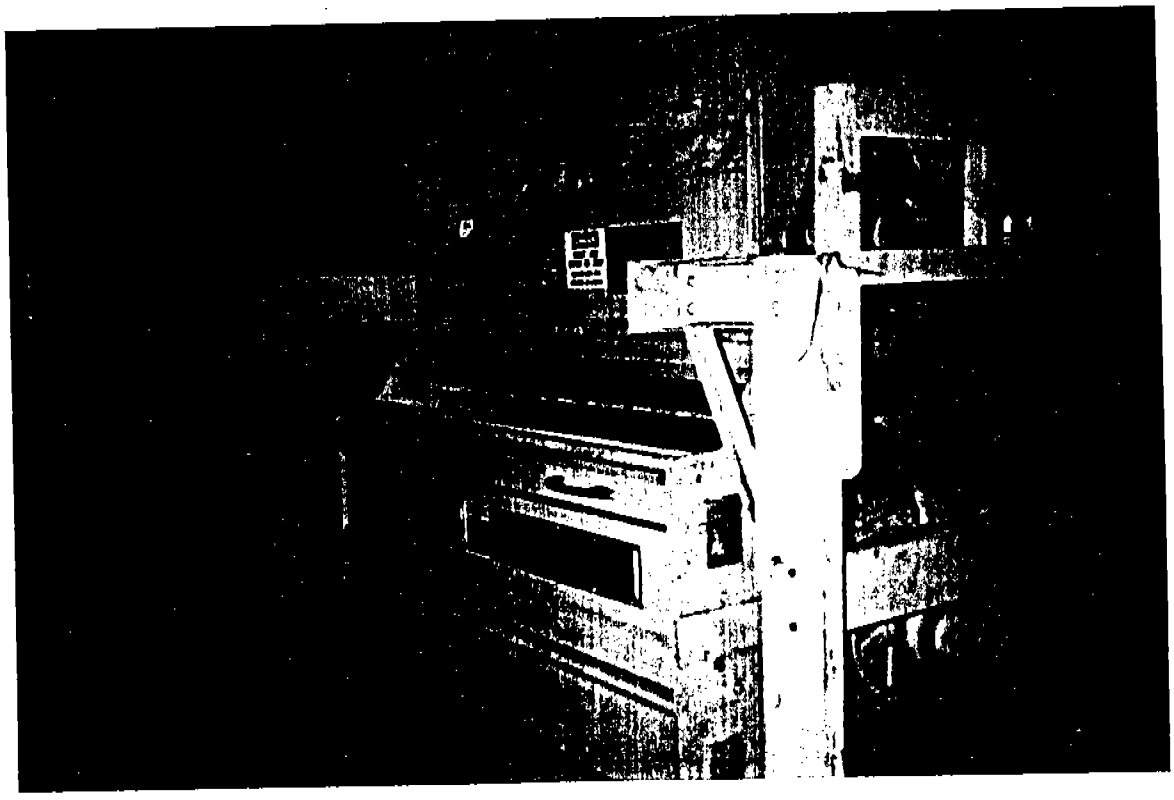

PHOTO 9
THIRD STAGE LINT CLEANER CONSTELLATION UNIT WITH
MOSS CONDENSERS AND 80 MESH SCREENS

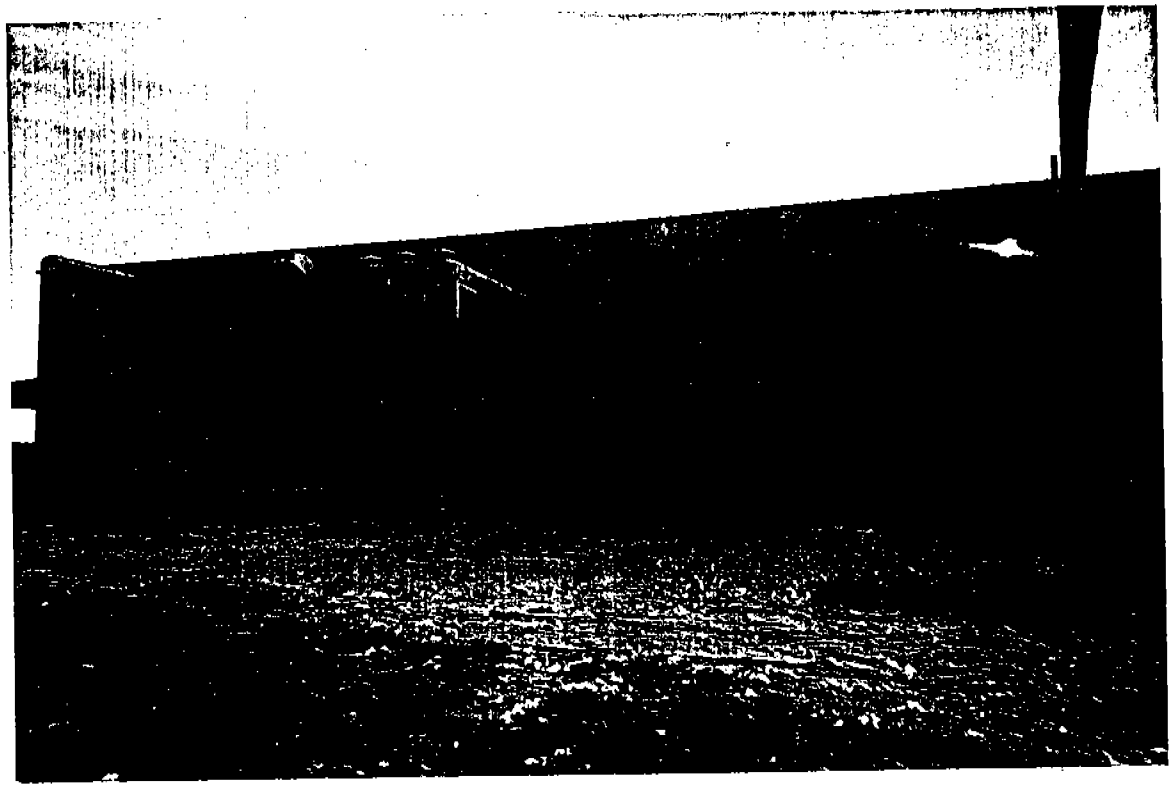

PHOTO 10
LOW PRESSURE DISCHARGE POINTS FOR CONDENSERS AND
3 MOTE CYCLONES (HIGH PRESSURE EXHAUST)

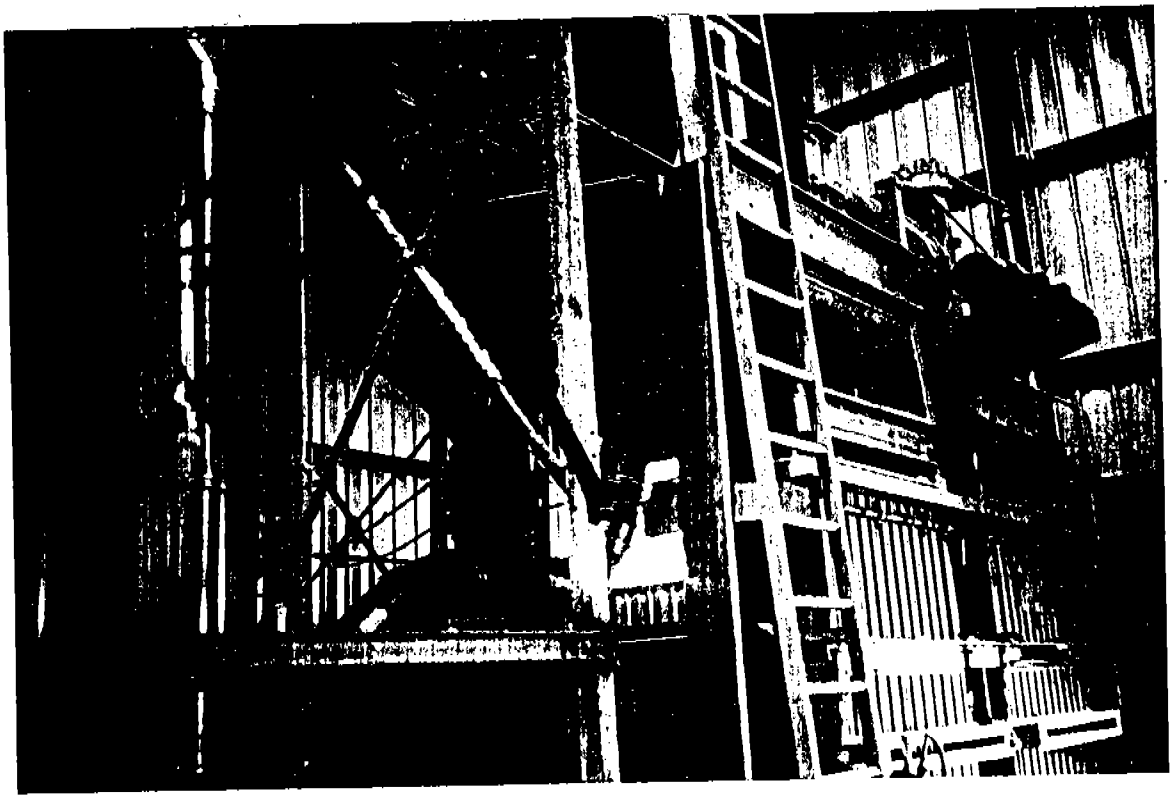

PHOTO 11
. MOTE CLEANER AND MOTE PRESS. TRASH FROM MOTES IS ROUTED BACK TO THE MAIN CYCLONE BANK. MOTES ARE SOLD AS UPHOLSTERY STUFFING.

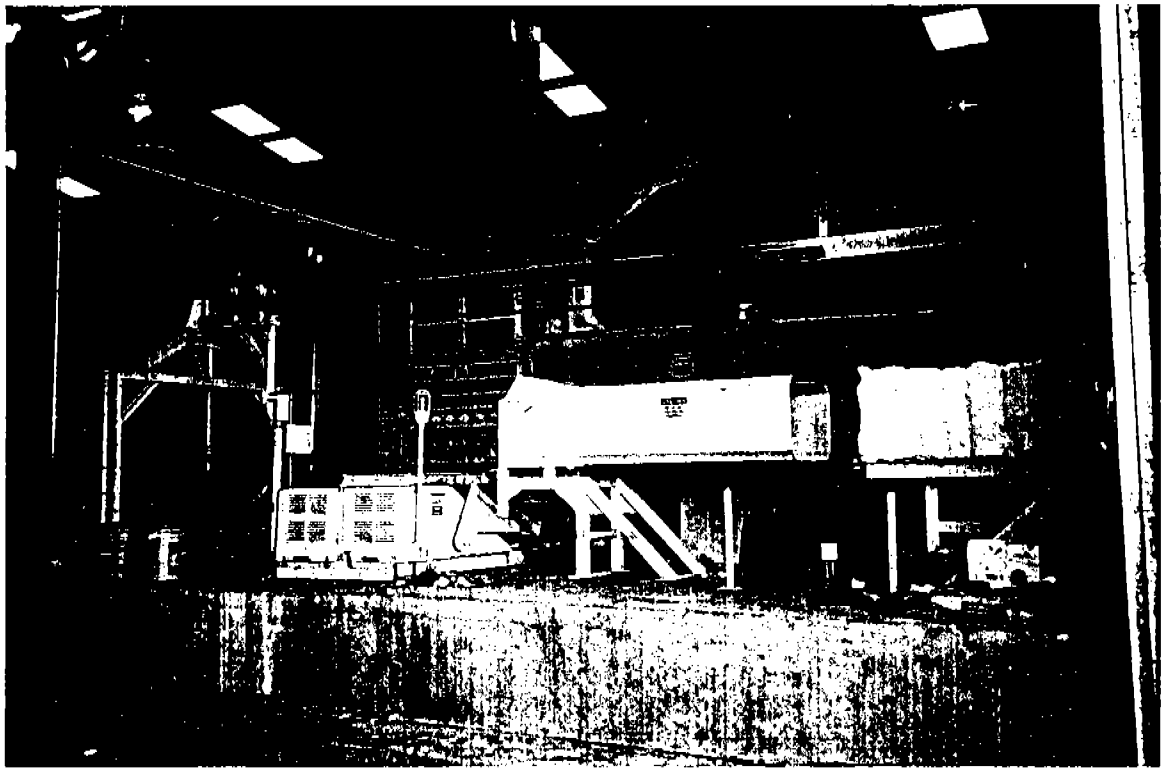

PHOTO 12
LINT COTTON PRESS SHOWING LINT SLIDE AND FINAL BALED PRODUCT.

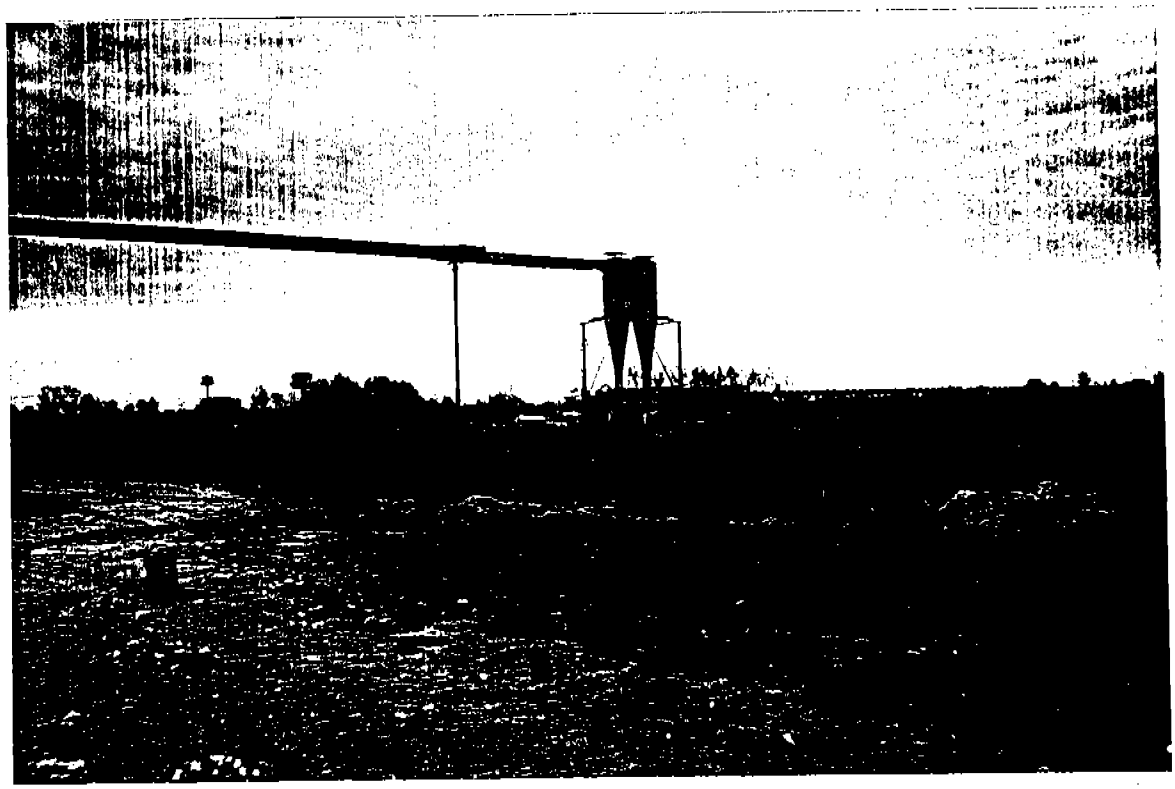

PHOTO 13
TRASH BLOWN TO WASTE DISPOSAL PILE FROM MAIN CYCLONE BANK

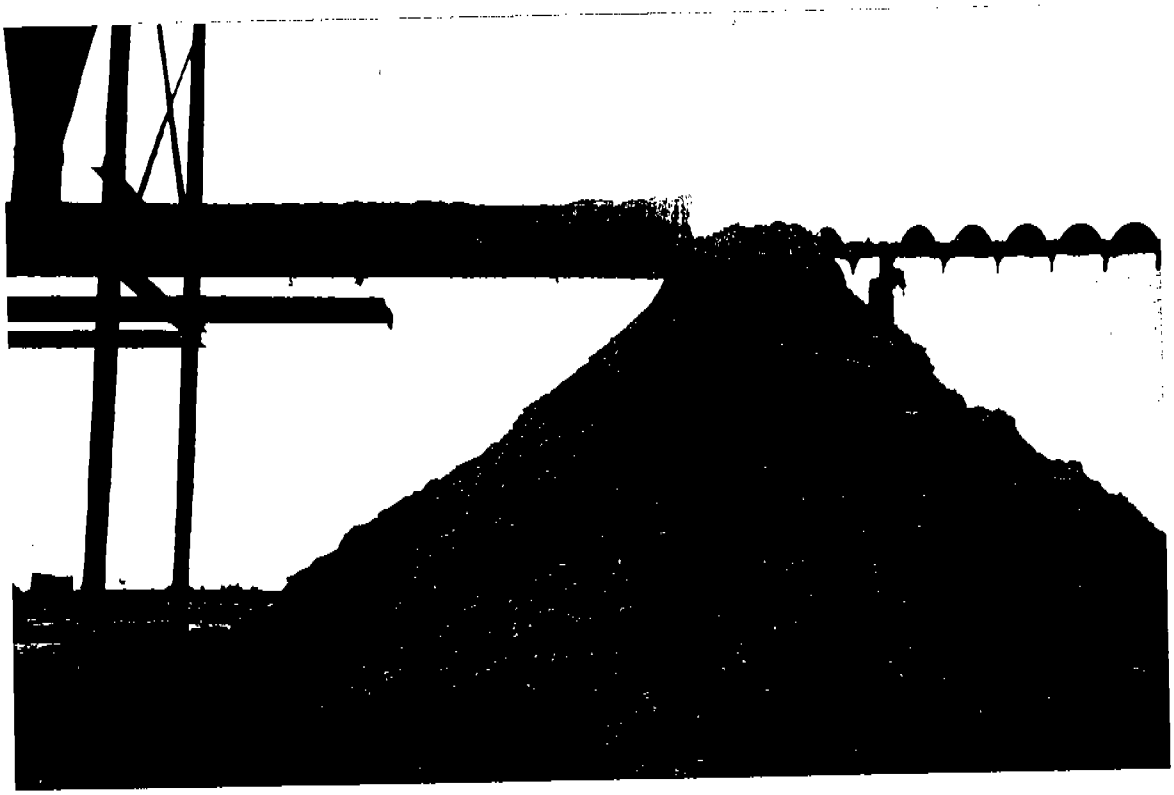

PHOTO 14
WASTE DISPOSAL PILE SHOWING AUGERED WASTE AND
TWO SPRAY NOZZLES DIRECTING MIST ON TOP OF PILE.

PHOTO 15
CARL KOONTZ, VICKI LOWE AND LIZ TROUP
EXAMINING HIGH VOLUME FILTER

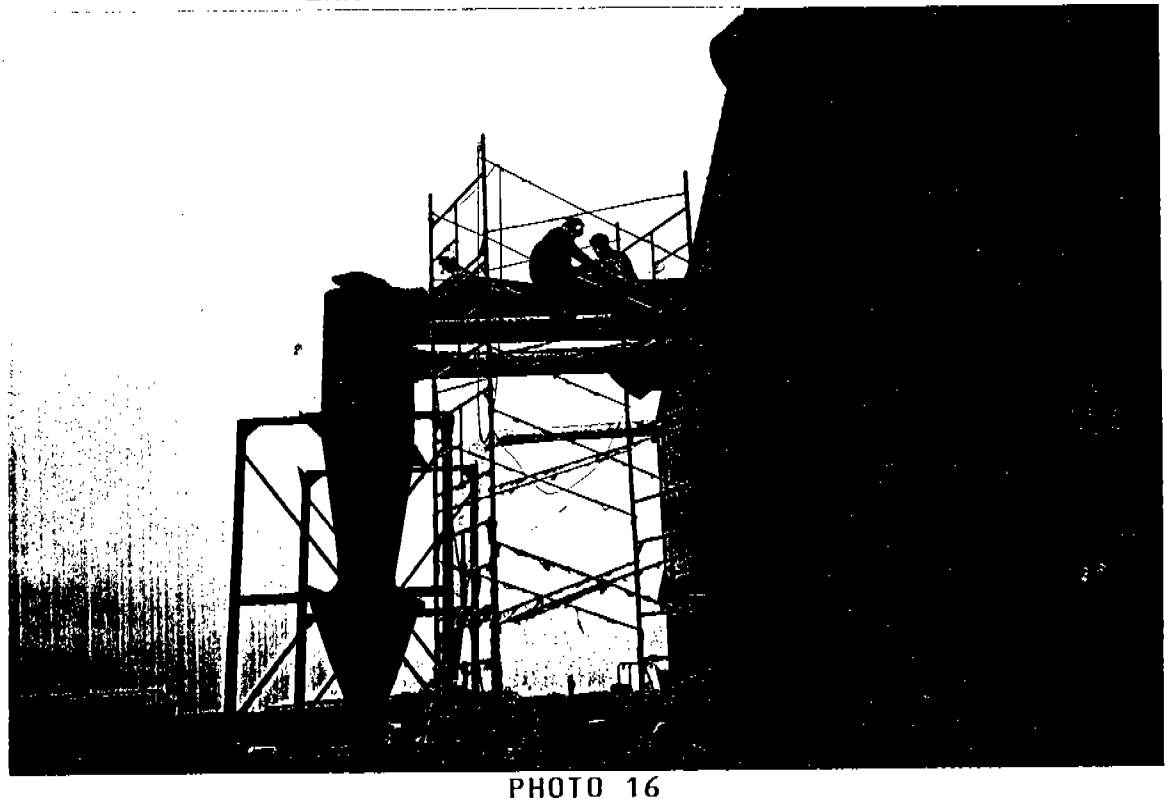

PHOTO 16
JERYL STEWART AND ALVIN PRATT SAMPLING LOW PRESSURE EXHAUST FROM GIN STAND 1, FIRST AND SECOND STAGE LINT CLEANERS. 16D PERFORATED DRUMS WERE UTILIZED.

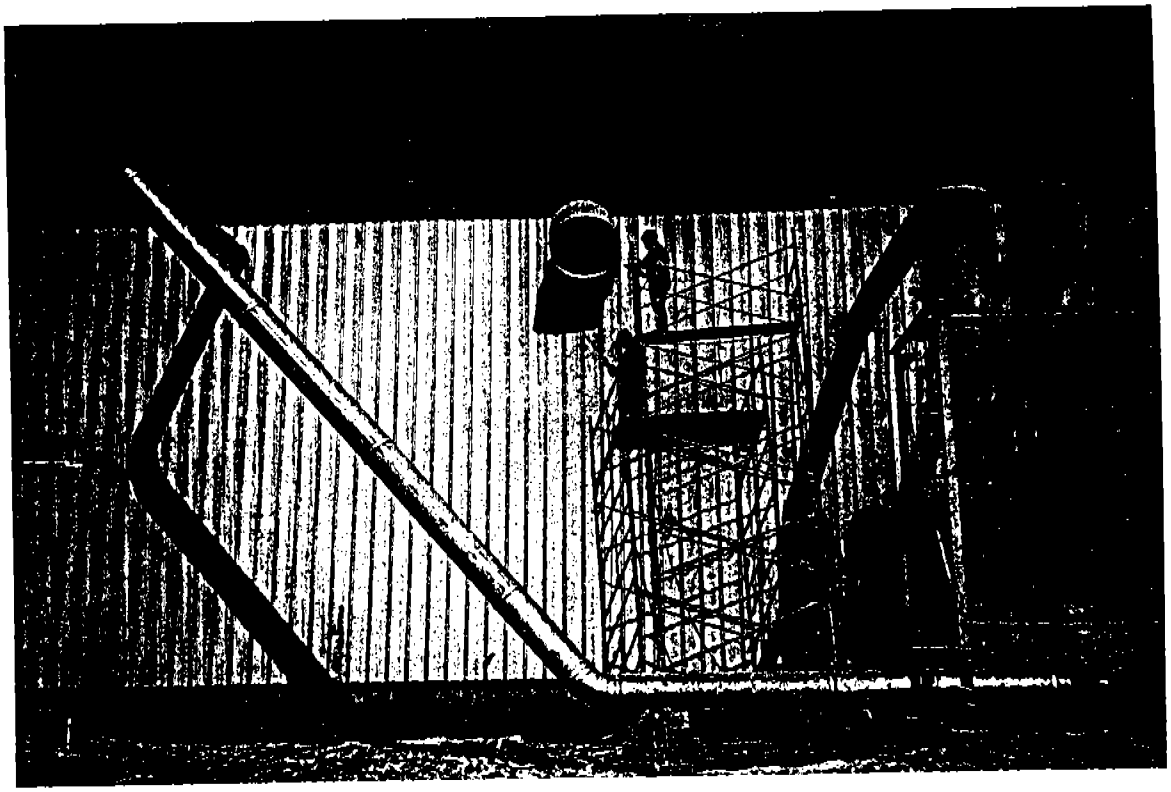

PHOTO 17
JERYL STEWART SAMPLING THE MOSS BATTERY CONDENSER
WHICH IS COVERED WITH 80 MESH SCREEN.

CYCLONE FIELD DATA FORM

Company Halls Gin Co. Date Oct. 25, 1988

Cyclone I. D. Suck Pipe Quad Cyclone 1A

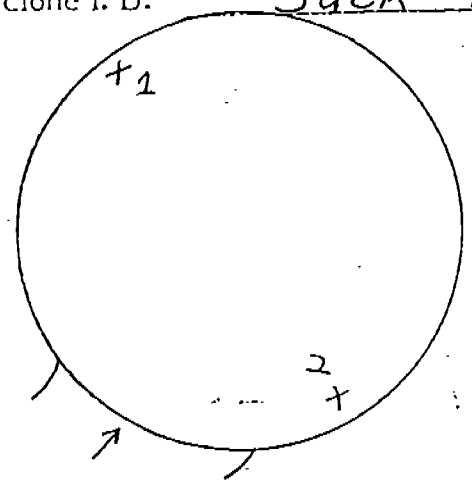

Approximate area of measurable flow and points sampled

point #	ΔP	ΔH
1	1.5	0.34
2	1.5	0.34

exit dry bulb 100°F

exit wet bulb 72°F

train # 1

nozzle diameter 1.116

orifice temp. see below

barometric pressure 29.72

CYCLONE DIMENSIONS: CHECK THE APPROPRIATE EXIT CONFIGURATION.

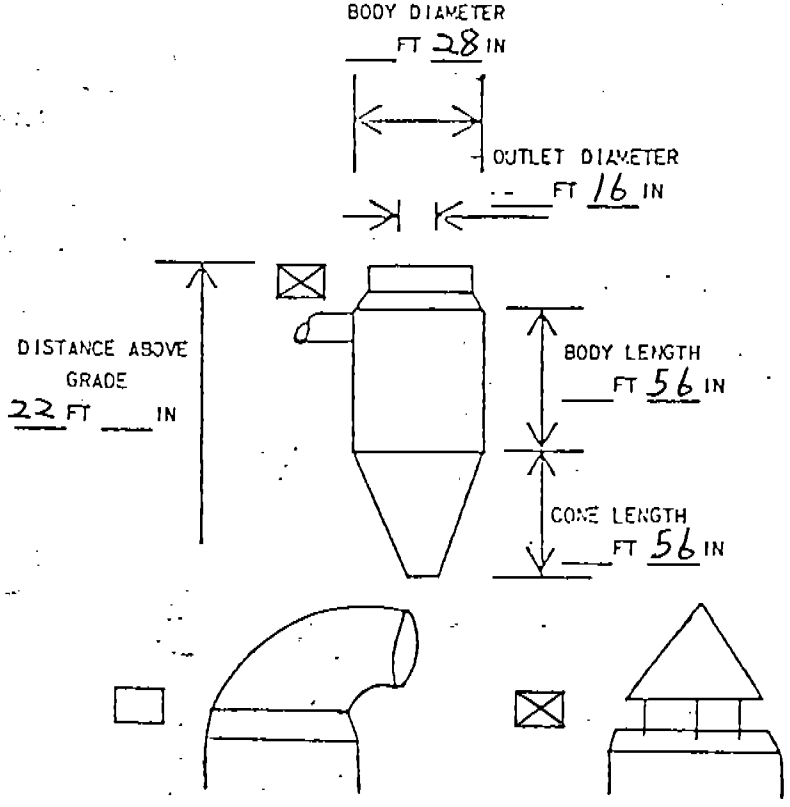

CHECK THE APPROPRIATE INLET CONFIGURATION:

If different from above draw diagram below:

COMMENTS

Run #	Time	T_s (°F)	T_o (°F)
1	9:20-9:37AM	101	95
2	10:00-10:16 AM	103	95
3	10:45-11:02 AM	101	95

CALCULATION OF ACTUAL EMISSIONS

HALLS GIN COMPANY (49-00074)

Source Identification Suck Pipe Quad Cyclone 1A

Test Date Oct. 25, 1988

Q = actual airflow in ft^3/min*	2,875
T_d = dry bulb temperature at exhaust point	100°F
T_w = wet bulb temperature at exhaust point	72°F
M = percent moisture in exhaust gases	2.7%
P_{bar} = barometric pressure	29.72

$$Q_{std} = (Q)\ (1 - \frac{M}{100})$$

2,797

Q_{std} in dry standard ft^3/min

* Based on fan data obtained from the designer and builder of the gin. The fan data is at ambient temperature, which is approximately 70^0 F. Barometric pressures measured during the testing were within one percent of 29.92 in. of Hg. Therefore, the given flows are considered to be at standard conditions.

Company Halls Gin Co. Test Date Oct. 25, 1988

Suck Pipe Quad

Cyclone I.D. Cyclone 1A

Page 1 of 3

Point No.	1	2	3	4	5	6
Point ΔP	1.5	1.5				
SR60 = sampling rate through orifice at 60°F (see Note 1 on third page following)	31.828	31.828				
T_o = average temperature of orifice (°F)	95	95				
$SR = \frac{(SR60)(T_o + 460)}{520}$ (SR = Sampling rate in ft/min)	33.970	33.970				
T_p = time per sample point (min)	7.5	7.5				

Run #	1	2	3	Ave.
$SV = (T_p)_1 (SR)_1 + (T_p)_2 (SR)_2 + \ldots$ (SV = total sample volume in ft^3)	509.6	509.6	509.6	
T_t = total sampling time (min.)	15	15	15	
$ASV_{ft^3/min} = \frac{SV}{T_t}$ (ASV = average volume sampled)	33.970	33.970	33.970	
T_E = average temperature of exit (°F)	101	103	101	
M_E = molecular weight of exit gases (weighted averages of molecular weights obtained in inlet ducts)	28.70	28.70	28.70	
P_{bar} = barometric pressure	29.72	29.72	29.72	
C_p = 0.99 (pitot tube coeficient)	0.99	0.99	0.99	
$V_E = (85.48)(C_p)\left[AVE\sqrt{\Delta P_E}\right]\left[\sqrt{\frac{(T_E + 460)}{(M_E)(P_{bar})}}\right]$ (VE = average velocity at sampling points ft/sec)	84.1	84.2	84.1	
d_n = diameter of nozzle (in.)	1.116	1.116	1.116	

Company Halls Gin Co. Test Date Oct. 25, 1988

Suck Pipe Quad

Cyclone I.D. Cyclone 1A

Run #	1	2	3	Ave.
$A_n = \frac{\pi \times (d_n)^2}{4}$ (An = area of nozzle in.^{2})	0.978	0.978	0.978	
$V_n = \frac{(ASV)(T_E + 460)(2.4)}{(A_n)(T_o + 460)}$ (Vn = average velocity in nozzle ft/sec)	84.3	84.6	84.3	
$P_1 = \frac{(100)(Vn)}{V_E}$ (P1 = percent isokinetic)	100	100	100	
TP = total weight of particulate caught in sampler during a run (g.)	0.0729	0.0912	0.0749	
FW = gain in weight of filter during a run (g.)	0.0535	0.0718	0.0555	
FB = gain in weight of blank filter (to compensate for filter handling) (g.)	-0.0020	-0.0020	-0.0020	
AW = gain in weight from acetone wash of sampler at end of each series of runs (complete test) (g.)	0.0582	0.0582	0.0582	
AB = gain in weight of blank volume of acetone (to compensate for impurities in acetone) (g.)	0.0059	0.0059	0.0059	
N = number of runs in each test over which only a single probe wash occurs	3	3	3	
$TP = FW - FB + \frac{AW - AB}{N}$ (TP = total particulate catch per sample run)	0.0729	0.0912	0.0749	

Company Halls Gin Co. Test Date Oct. 25, 1988

Suck Pipe Quad

Cyclone I.D. Cyclone 1A

Run #	1	2	3	Ave.
M_s = percent moisture in exit gases (weighted averages of percent moistures obtained in inlet ducts)	2.7	2.7	2.7	
$QS_{std} = \frac{(SV)\ (17.71)\ (P_{bar})\ (1-\frac{Ms}{100})}{(T_o + 460)}$ (QSstd = total volume sampled at standard conditions ft^3)	470.2	470.2	470.2	
C_s (gr/dscf) = $\frac{(15.43)\ (TP)}{(QS_{std})}$ (Cs = particulate concentration)	0.0024	0.0030	0.0025	0.0026
$PMR_{lb/hr}$ = $(C_s)\ (TQ_{std})\ (0.00857)$ TQ_{std} = (total air into cyclone) (PMR = mass emission rate)	0.06	0.07	0.06	0.06

(Note 1)

The rate of air flow through the orifice is precalculated for all pressure drops across the orifice using the various nozzles for an orifice temperature of 60°F. This figure is then converted to the actual air flow at the orifice temperature by the equation:

$$SR = \frac{(SR60)\ (T_o = 460)}{520}$$

Where: SR60 = sampling rate through orifice at 60°F
To = average temperature of orifice (°F)

JS/an/APCHd1

RADER I
CYCLONE 1A
BLANK
DATE: 10/25/88
HALLS COTTON GIN
SUCK PIPE CLEAN

I A
Blank

I
Sample I

Filter No. 001595

City & Station

Date Start Mo Day Yr Hr

Date Stop Mo Day Yr Hr

Flow Time
Stop Stop
Start Start
Ave Total

Remarks

Wt Sample & Filter 4.3681

Wt Filter 4.3201

Wt Sample 0.002

Filter Conc.

Initial weighing by
WCH DATE 10-7-88

Final weighing by
WCH Date 11-7-88

Metals sample taken by Date

Microscopic sample taken by Date

Sample Custody

1. Collected by Date
   Delivered to Date
2. Received by Date
   Delivered to Date
3. Received by Date
   Delivered to Date
4. Received in laboratory by
   Date from

PH-2857
LAB 6/86

RADER I
CYCLONE IN 1A
RUN #1
DATE: 10/25/85
HIGH VOLUME
SUCK PIPE RUN
1 Sampler

Filter No. 001596

City & Station

Date Start Mo Day Yr Hr

Date Stop Mo Day Yr Hr

Flow Time
Stop Stop
Start Start
Ave Total

Remarks

Wt Sample & Filter 4.4092

Wt Filter 4.3557

Wt Sample 0.0535

Filter Conc.

Initial weighing by
WCH DATE 10-7-85

Final weighing by
WCH Date 11-7-85

Metals sample taken by Date

Microscopic sample taken by Date

Sample Custody

1. Collected by Date
   Delivered to Date
2. Received by Date
   Delivered to Date
3. Received by Date
   Delivered to
4. Received in laboratory by
   Date from

PH-2857
LAB 8/86

RADER I
CYCLONE 1A
RUN #2
10/25/88
HALLS COTTON GIN
SUCK PIPE QUAD

Filter No. C01539

City & Station

Date Start Mo Day Yr Hr

Date Stop Mo Day Yr Hr

Flow Time
Stop Stop
Start Start
Ave Total

Remarks

Wt Sample & Filter 4.4201

Wt Filter 4.3483

Wt Sample 0.0718

Filter Conc.

Initial weighing by WCH DATE 10-7-88

Final weighing by WCH Date 11-7-88

Metals sample taken by Date

Microscopic sample taken by Date

Sample Custody

1. Collected by Date
   Delivered to Date
2. Received by Date
   Delivered to Date
3. Received by Date
   Delivered to Date
4. Received in laboratory by
   Date from

PH-2857
LAB 8/86

Delivered to Date
2. Received by Date
   Delivered to Date
3. Received by Date
   Delivered to Date
4. Received in laboratory by
   Date from

PH-2857
LAB 8/86

2	10:23 - 10:40 AM	101	95
3	11:05 - 11:21 AM	101	95

Company Halls Gin Co. Test Date Oct. 25, 1988

Cyclone I.D. Suck Pipe Quad Cyclone 1B

Point No.	1	2	3	4	5	6
Point ΔP	1.5	1.5				
SR60 = sampling rate through orifice at 60°F (see Note 1 on third page following)	22.437	22.437				
T_o = average temperature of orifice (°F)	95	95				
$SR = \frac{(SR60)(T_o + 460)}{520}$ (SR = Sampling rate in ft/min)	23.947	23.947				
T_p = time per sample point (min)	7.5	7.5				

Run #	1	2	3	Ave.
$SV = (T_p)_1 (SR)_1 + (T_p)_2 (SR)_2 + \ldots$ (SV = total sample volume in ft^3)	359.2	359.2	359.2	
T_t = total sampling time (min.)	15	15	15	
$ASV_{ft^3/min} = \frac{SV}{T_t}$ (ASV = average volume sampled)	23.947	23.947	23.947	
T_E = average temperature of exit (°F)	101	101	101	
M_E = molecular weight of exit gases (weighted averages of molecular weights obtained in inlet ducts)	28.70	28.70	28.70	
P_{bar} = barometric pressure	29.72	29.72	29.72	
C_p = 0.99 (pitot tube coeficient)	0.99	0.99	0.99	
$V_E = (85.48)(C_p)\left[\text{AVE}\sqrt{\Delta P_E}\right]\left[\sqrt{\frac{(T_E + 460)}{(M_E)(P_{bar})}}\right]$ (VE = average velocity at sampling points ft/sec)	84.1	84.1	84.1	
d_n = diameter of nozzle (in.)	0.937	0.937	0.937	

Company Halls Gin Co. Test Date Oct. 25, 1988

Suck Pipe Quad

Cyclone I.D. Cyclone 1B

Run #	1	2	3	Ave.
$A_n = \frac{\pi \times (d_n)^2}{4}$ (An = area of nozzle in.^{2})	0.690	0.690	0.690	
$V_n = \frac{(ASV)(T_E + 460)(2.4)}{(A_n)(T_o + 460)}$ (Vn = average velocity in nozzle ft/sec)	84.2	84.2	84.2	
$P_I = \frac{(100)(Vn)}{V_E}$ (PI = percent isokinetic)	100	100	100	
TP = total weight of particulate caught in sampler during a run (g.)	0.0730	0.0650	0.0565	
FW = gain in weight of filter during a run (g.)	0.0631	0.0551	0.0466	
FB = gain in weight of blank filter (to compensate for filter handling) (g.)	-0.0022	-0.0022	-0.0022	
AW = gain in weight from acetone wash of sampler at end of each series of runs (complete test) (g.)	0.0315	0.0315	0.0315	
AB = gain in weight of blank volume of acetone (to compensate for impurities in acetone) (g.)	0.0083	0.0083	0.0083	
N = number of runs in each test over which only a single probe wash occurs	3	3	3	
$TP = FW - FB + \frac{AW - AB}{N}$ (TP = total particulate catch per sample run)	0.0730	0.0650	0.0565	

Company Halls Gin Co. Test Date Oct. 25, 1988

Suck Pipe Quad

Cyclone I.D. Cyclone 1B

Page 3 of 3

Run #	1	2	3	Ave.
M_s = percent moisture in exit gases (weighted averages of percent moistures obtained in inlet ducts)	2.7	2.7	2.7	
$QS_{std} = \frac{(SV)\ (17.71)\ (P_{bar})\ (1-\frac{Ms}{100})}{(T_o + 460)}$ (QSstd = total volume sampled at standard conditions ft^3)	331.4	331.4	331.4	
C_s (gr/dscf) $= \frac{(15.43)\ (TP)}{(QS_{std})}$ (Cs = particulate concentration)	0.0034	0.0030	0.0026	0.0030
$PMR_{lb/hr} = (C_s)\ (TQ_{std})\ (0.00857)$ TQ_{std} = (total air into cyclone) (PMR = mass emission rate)	0.0815	0.0719	0.0623	0.07

(Note 1)

The rate of air flow through the orifice is precalculated for all pressure drops across the orifice using the various nozzles for an orifice temperature of 60°F. This figure is then converted to the actual air flow at the orifice temperature by the equation:

$$SR = \frac{(SR60)\ (T_o = 460)}{520}$$

Where: SR60 = sampling rate through orifice at 60°F
To = average temperature of orifice (°F)

JS/ah/APCHd1

(RADAR) Sampler II
1B Blank
10/25/88
Halls Cotton Gin
Suck Pipe Quad

Filter No. 001594

City & Station

Date Start ____ Mo ____ Day ____ Yr ____ Hr

Flow Time
Stop ____ Stop ____
Start ____ Start ____
Ave ____ Total ____

Date Stop ____ Mo ____ Day ____ Yr ____ Hr

Remarks

Wt Sample & Filter 4.3343

Wt Filter 4.3365

Wt Sample ~~WCH 2-2~~ 0.0022

Filter Conc.

Initial weighing by WCH DATE 10-7-88

Final weighing by WCH Date 11-7-88

Metals sample taken by ____ Date ____

Microscopic sample taken by ____ Date ____

Sample Custody

1. Collected by ____ Date ____
   Delivered to ____ Date ____
2. Received by ____ Date ____
   Delivered to ____ Date ____
3. Received by ____ Date ____
   Delivered to ____ Date ____
4. Received in laboratory by ____
   Date ____ from ____

PH-2857
LAB 8/86

RADIAN II
CYCLONE 1B
RUN #1
DATE: 10/25/88
HALLS COTTON GIN
SUCK PIPE
QUAD

Filter No. C01587

City & Station

Date Start ___ Mo ___ Day ___ Yr ___ Hr

Date Stop ___ Mo ___ Day ___ Yr ___ Hr

Flow Time
Stop ___ Stop ___
Start ___ Start ___
Ave ___ Total ___

Remarks

Wt Sample & Filter 4.3843

Wt Filter 4.3212

Wt Sample 0.0631

Filter Conc.

Initial weighing by
WCH DATE 10-7-88

Final weighing by
WCH Date 11-7-88

Metals sample taken by ___ Date ___

Microscopic sample taken by ___ Date ___

Sample Custody

1. Collected by ___ Date ___
   Delivered to ___ Date ___
2. Received by ___ Date ___
   Delivered to ___ Date ___
3. Received by ___ Date ___
   Delivered to ___ Date ___
4. Received in laboratory by ___
   Date ___ from ___

PII-2857
LAB 8/86

RADER II
CYCLONE 1B
RUN #2
10/25/88
HALLS COTTONGIN
SUCK PIPE QUAD

Filter No. 001599

City & Station

Date Start ____ Mo ____ Day ____ Yr ____ Hr

Flow Time
Stop ____ Stop ____
Start ____ Start ____
Ave ____ Total ____

Date Stop ____ Mo ____ Day ____ Yr ____ Hr

Remarks

Wt Sample & Filter 4.4266 4.4276 4/27 11-9-88

Initial weighing by WCH DATE 10-7-88

Wt Filter 4.3715

Wt Sample 0.0551

Final weighing by WCH Date 11-7-88

Filter Conc.

Metals sample taken by ____ Date ____

Microscopic sample taken by ____ Date ____

Sample Custody

1. Collected by ____ Date ____
   Delivered to ____ Date ____
2. Received by ____ Date ____
   Delivered to ____ Date ____
3. Received by ____ Date ____
   Delivered to ____ Date ____
4. Received in laboratory by ____
   Date ____ from ____

PH-2857
LAB 8/88

Phase II
Cyclone 1B
Run #3
10/25/88
Hamilton Bin
Steel Pipe Dust

Filter No. 001601

City & Station

Date Start ___ Mo ___ Day ___ Yr ___ Hr

Date Stop ___ Mo ___ Day ___ Yr ___ Hr

Flow Time
Stop ___ Stop ___
Start ___ Start ___
Ave ___ Total ___

Remarks

Wt Sample & Filter 4.3871

Wt Filter 4.3405

Wt Sample 0.0466

Filter Conc.

Initial weighing by
WCH DATE 10-7-88

Final weighing by
WCH Date 11-7-88

Metals sample taken by ___ Date ___

Microscopic sample taken by ___ Date ___

Sample Custody

1. Collected by ___ Date ___
   Delivered to ___ Date ___
2. Received by ___ Date ___
   Delivered to ___ Date ___
3. Received by ___ Date ___
   Delivered to ___
4. Received in laboratory by ___
   Date ___ from ___

PH-2057
LAB 8/86

SOURCE SAMPLING PARTICULATE LAB DATA (method 5), Sheet APC 598

Company Halls, TN Cotton Gin Company No. _____

Process Suck Pipe Quad Cyclone #3 Test Date 10-25-88

ACETONE BLANK APC 596

Run No.			
Beaker No.	1		
Acetone Volume, ml.	125		
Beaker + Acetone Residue Wt., g	111.8819		
Beaker tare weight, g	111.8793		
Net weight, g	0.0026		
Residue factor (R.f.), g/ml ($\frac{\text{net wt.}}{\text{acetone vol.}}$)	0.00002		)

FRONT HALF ACETONE WASH APC 598

Run. No.	1,2,3		
Beaker No.	4	5	
Wash vol., ml	200	200	400 total
Gross residue wt.g.	0.0189	0.0126	
Blank wt., g (R.f. x wash vol.)	0.0040	0.0040	
Net wt., g.	0.0149	0.0086	0.235 - total

CYCLONE FIELD DATA FORM

Company Halls Gin Co. Date Oct. 25, 1988

Cyclone I. D. Suck Pipe Quad Cyclone 1C

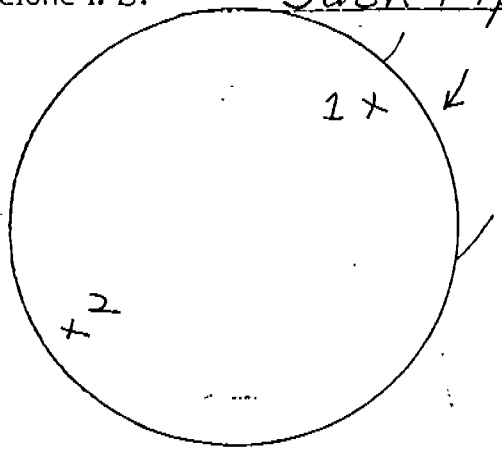

Approximate area of measurable flow and points sampled

point #	ΔP	ΔH
1	1.5	0.34
2	1.5	0.34

CYCLONE DIMENSIONS: CHECK THE APPROPRIATE EXIT CONFIGURATION

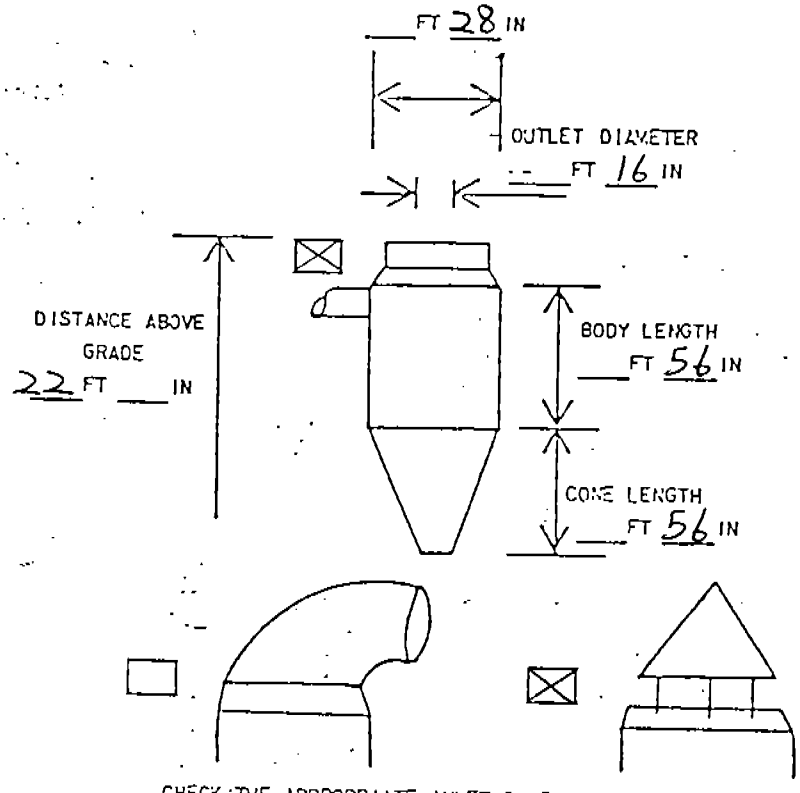

CHECK THE APPROPRIATE INLET CONFIGURATION:

If different from above draw diagram below:

exit dry bulb 100°F

exit wet bulb 72°F

train # 1

nozzle diameter 1.116

orifice temp. see below

barometric pressure 29.79

COMMENTS	Run #	Time	T_s (°F)	T_o (°F)
	1	11:38 - 11:56 AM	102	95
	2	12:14 - 12:31 PM	100	95
	3	12:38 - 12:55 PM	98	95

CALCULATION OF ACTUAL EMISSIONS

HALLS GIN COMPANY (49-00074)

Source Identification Suck Pipe Quad Cyclone 1C

Test Date Oct. 25, 1988

Q = actual airflow in ft^3/min* 2,875

T_d = dry bulb temperature at exhaust point 100°F

T_w = wet bulb temperature at exhaust point 72°F

M = percent moisture in exhaust gases 2.7%

P_{bar} = barometric pressure 29.79

$$Q_{std} = (Q)\left(1 - \frac{M}{100}\right)$$

2,797

Q_{std} in dry standard ft^3/min

* Based on fan data obtained from the designer and builder of the gin. The fan data is at ambient temperature, which is approximately 70° F. Barometric pressures measured during the testing were within one percent of 29.92 in. of Hg. Therefore, the given flows are considered to be at standard conditions.

Company Halls Gin Co. Test Date Oct. 25, 1988

Suck Pipe Quad

Cyclone I.D. Cyclone 1C

Page 1 of 3

Point No.	1	2	3	4	5	6
Point ΔP	1.5	1.5				
SR60 = sampling rate through orifice at 60°F (see Note 1 on third page following)	31.828	31.828				
T_o = average temperature of orifice (°F)	95	95				
$SR = \frac{(SR60)(T_o + 460)}{520}$ (SR = Sampling rate in ft/min)	33.970	33.970				
T_p = time per sample point (min)	7.5	7.5				

Run #	1	2	3	Ave.
$SV = (T_p)_1 (SR)_1 + (T_p)_2 (SR)_2 + \ldots$ (SV = total sample volume in ft^3)	509.6	509.6	509.6	
T_t = total sampling time (min.)	15	15	15	
$ASV_{ft^3/min} = \frac{SV}{T_t}$ (ASV = average volume sampled)	33.970	33.970	33.970	
T_E = average temperature of exit (°F)	102	100	98	
M_E = molecular weight of exit gases (weighted averages of molecular weights obtained in inlet ducts)	28.70	28.70	28.70	
P_{bar} = barometric pressure	29.79	29.79	29.79	
C_p = 0.99 (pitot tube coeficient)	0.99	0.99	0.99	
$V_E = (85.48)(C_p)\left[AVE\sqrt{\Delta P_E}\right]\left[\sqrt{\frac{(T_E + 460)}{(M_E)(P_{bar})}}\right]$ (VE = average velocity at sampling points ft/sec)	84.0	83.9	83.7	
d_n = diameter of nozzle (in.)	1.116	1.116	1.116	

Company Halls Gin Co. Test Date Oct. 25, 1988

Cyclone I.D. Suck Pipe Quad Cyclone 1C

Run #	1	2	3	Ave.
$A_n = \frac{\pi \times (d_n)^2}{4}$ (An = area of nozzle in.^{2})	0.978	0.978	0.978	
$V_n = \frac{(ASV)(T_E + 460)(2.4)}{(A_n)(T_o + 460)}$ (Vn = average velocity in nozzle ft/sec)	84.4	84.1	83.8	
$P_1 = \frac{(100)(Vn)}{V_E}$ (P1 = percent isokinetic)	100	100	100	
TP = total weight of particulate caught in sampler during a run (g.)	0.0715	0.0823	0.0904	
FW = gain in weight of filter during a run (g.)	0.0492	0.0600	0.0681	
FB = gain in weight of blank filter (to compensate for filter handling) (g.)	-0.0069	-0.0069	-0.0069	
AW = gain in weight from acetone wash of sampler at end of each series of runs (complete test) (g.)	0.0545	0.0545	0.0545	
AB = gain in weight of blank volume of acetone (to compensate for impurities in acetone) (g.)	0.0083	0.0083	0.0083	
N = number of runs in each test over which only a single probe wash occurs	3	3	3	
$TP = FW - FB + \frac{AW - AB}{N}$ (TP = total particulate catch per sample run)	0.0715	0.0823	0.0904	

Company Halls Gin Co. Test Date Oct. 25, 1988

Suck Pipe Quad

Cyclone I.D. Cyclone 1C

Run #	1	2	3	Ave.
M_s = percent moisture in exit gases (weighted averages of percent moistures obtained in inlet ducts)	2.7	2.7	2.7	
$QS_{std} = \frac{(SV)\,(17.71)\,(P_{bar})\,(1-\frac{Ms}{100})}{(T_o + 460)}$ (QSstd = total volume sampled at standard conditions ft^3)	471.3	471.3	471.3	
C_s (gr/dscf) $= \frac{(15.43)\,(TP)}{(QS_{std})}$ (Cs = particulate concentration)	0.0023	0.0027	0.0030	0.0027
$PMR_{lb/hr} = (C_s)\,(TQ_{std})\,(0.00857)$ TQ_{std} = (total air into cyclone) (PMR = mass emission rate)	0.06 .053	0.06	0.07	0.06

(Note 1)

The rate of air flow through the orifice is precalculated for all pressure drops across the orifice using the various nozzles for an orifice temperature of 60°F. This figure is then converted to the actual air flow at the orifice temperature by the equation:

$$SR = \frac{(SR60)\,(T_o = 460)}{520}$$

Where: SR60 = sampling rate through orifice at 60°F
To = average temperature of orifice (°F)

JS/ah/APCHd1

PADER I
Cyclone 1C
BLANK
10/25/88
Hales Station Gin
Slick Pipe Quad

Filter No. 001602

City & Station

Date Start ___ Mo ___ Day ___ Yr ___ Hr Flow Time Stop ___ Stop ___

Date Stop ___ Mo ___ Day ___ Yr ___ Hr Start ___ Start ___

Ave ___ Total ___

Remarks

Wt Sample & Filter 4.3644

Wt Filter 4.3713

Wt Sample 0.0069

Filter Conc.

Initial weighing by WCH DATE 10-7-88

Final weighing by WCH Date 11-7-88

Metals sample taken by ___ Date ___

Microscopic sample taken by ___ Date ___

Sample Custody

1. Collected by ___ Date ___

   Delivered to ___ Date ___

2. Received by ___ Date ___

   Delivered to ___ Date ___

3. Received by ___ Date ___

   Delivered to ___ Date ___

4. Received in laboratory by ___

   Date ___ from ___

PH-2857
LAB 8/88

Rader I 9c
Cyclone 1C
Run #1
10/05/86
Halls Cotton Gin
Suck Pipe Quad

Filter No. 001603

City & Station

Date Start Mo Day Yr Hr

Date Stop Mo Day Yr Hr

Flow Time
Stop Stop
Start Start
Ave Total

Remarks

Wt Sample & Filter 4.4134

Wt Filter 4.3642 4.3637 10-7-88 LKS

Wt Sample 0.0492

Filter Conc.

Initial weighing by WCH DATE 10-7-88

Final weighing by WCH Date 11-7-88

Metals sample taken by Date

Microscopic sample taken by Date

Sample Custody

1. Collected by Date
   Delivered to Date
2. Received by Date
   Delivered to Date
3. Received by Date
   Delivered to Date
4. Received in laboratory by
   Date from

PH-2857
LAB 8/86

Fider I
Cyclone 1C
Run #2
10/25/88
Hills Cotton Gin
Suck Pipe Quad

Filter No. 001606

City & Station

Date Start ____ Mo ____ Day ____ Yr ____ Hr

Date Stop ____ Mo ____ Day ____ Yr ____ Hr

Flow Time
Stop ____ Stop ____
Start ____ Start ____
Ave ____ Total ____

Remarks

Wt Sample & Filter 4.4150

Wt Filter 4.3550

Wt Sample 0.0600

Filter Conc.

Initial weighing by WCH DATE 10-7-88

Final weighing by WCH Date 11-7-88

Metals sample taken by ____ Date ____

Microscopic sample taken by ____ Date ____

Sample Custody

1. Collected by ____ Date ____
   Delivered to ____ Date ____
2. Received by ____ Date ____
   Delivered to ____ Date ____
3. Received by ____ Date ____
   Delivered to ____ Date ____
4. Received in laboratory by ____
   Date ____ from ____

PH-2857
LAB 8/88

Paper I
Cyclone 1C
Run # 3
10/25/88
Hills Cottonbin
Sack Pipe Quad

Filter No. 001668

City & Station

Date Start ____ Mo ____ Day ____ Yr ____ Hr

Date Stop ____ Mo ____ Day ____ Yr ____ Hr

Flow Time
Stop ____ Stop ____
Start ____ Start ____
Ave ____ Total ____

Remarks

Wt Sample & Filter 4.3722

Wt Filter 4.3041

Wt Sample 0.0681

Filter Conc.

Initial weighing by WCH DATE 10-7-88

Final weighing by WCH Date 11-7-88

Metals sample taken by ____ Date ____

Microscopic sample taken by ____ Date ____

Sample Custody

1. Collected by ____ Date ____
   Delivered to ____ Date ____
2. Received by ____ Date ____
   Delivered to ____ Date ____
3. Received by ____ Date ____
   Delivered to ____ Date ____
4. Received in laboratory by ____
   Date ____ from ____

PH-2057
LAB 6/88

SOURCE SAMPLING PARTICULATE LAB DATA (method 5), Sheet APC 599

Company Hall's, TN Cotton Gin Company No. _____

Process Suck Pipe Quad 1C-cyclone Test Date 10-25-88

ACETONE BLANK APC 596

Run No.	_____	_____	_____
Beaker No.	1	_____	_____
Acetone Volume, ml.	125		
Beaker + Acetone Residue Wt., g	111.8819	_____	_____
Beaker tare weight, g	111.8793	_____	_____
Net weight, g	0.0026	_____	_____
Residue factor (R.f.), g/ml ($\frac{\text{net wt.}}{\text{acetone vol.}}$)	0.00002	_____	_____)

FRONT HALF ACETONE WASH APC 599

Run. No.	1,2,3	_____	_____
Beaker No.	6	7	_____
Wash vol., ml	200	200	400 total
Gross residue wt.g.	0.0281	0.0264	_____
Blank wt., g (R.f. x wash vol.)	0.0040	0.0040	_____
Net wt., g.	0.0241	0.0224	0.04465

CYCLONE FIELD DATA FORM

Company Halls Gin Co. Date Oct. 25, 1988

Cyclone I. D. Suck Pipe Quad Cyclone 1D

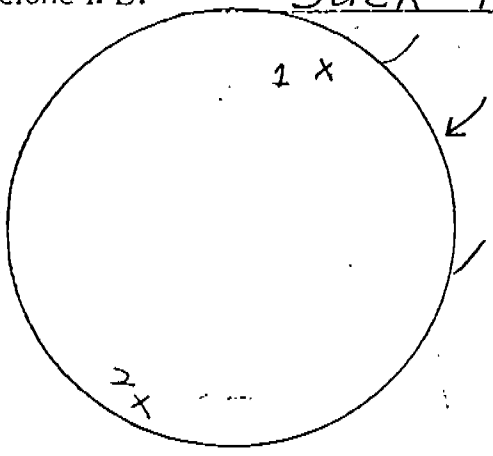

Approximate area of measurable flow and points sampled

point #	ΔP	ΔH
1	1.5	0.34
2	1.5	0.34

CYCLONE DIMENSIONS: CHECK THE APPROPRIATE EXIT CONFIGURATION

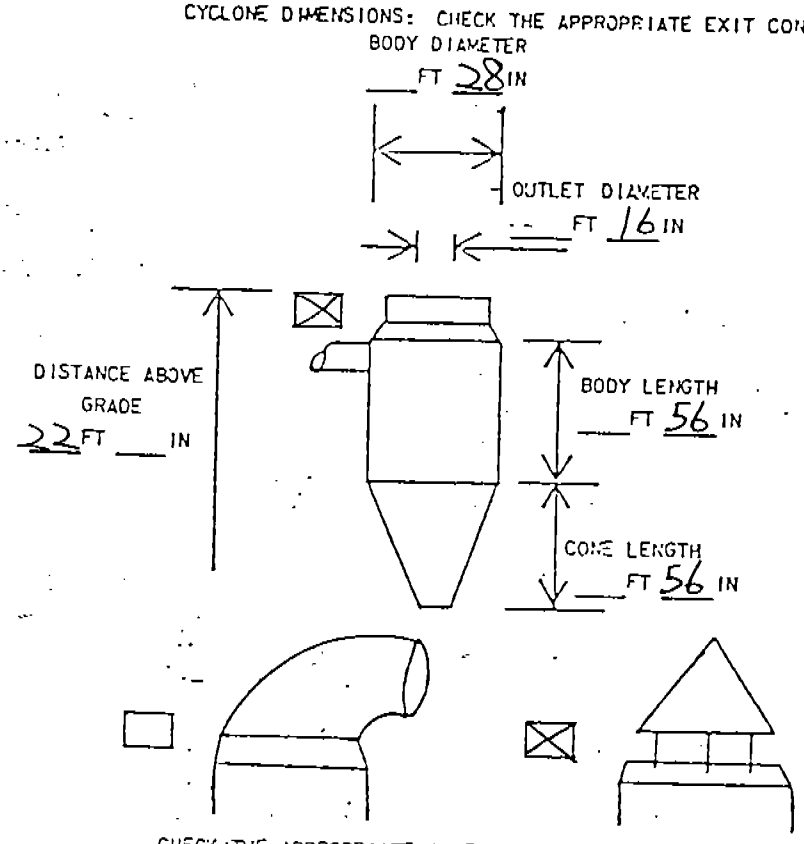

CHECK THE APPROPRIATE INLET CONFIGURATION:

If different from above draw diagram below:

exit dry bulb 100°F

exit wet bulb 72°F

train # 1

nozzle diameter 1.116

orifice temp. see below

barometric pressure 29.79

COMMENTS	Run #	Time	T_s (°F)	T_o (°F)
	1	1:15 - 1:32 PM	100	95
	2	1:45 PM - Plant Down 2:00 PM* 3:45 PM - Finish Test 3:55 PM - 3:58 PM	98	95
	3	4:02 - 4:20 PM	98	95

*sample run halted while plant down

CALCULATION OF ACTUAL EMISSIONS

HALLS GIN COMPANY (49-00074)

Source Identification Suck Pipe Quad Cyclone 1D

Test Date Oct. 25, 1988

Q = actual airflow in ft^3/min* 2,875

T_d = dry bulb temperature at exhaust point 100°F

T_w = wet bulb temperature at exhaust point 72°F

M = percent moisture in exhaust gases 2.7%

P_{bar} = barometric pressure 29.79

$$Q_{std} = (Q)\ (1 - \frac{M}{100})$$

2,797

Q_{std} in dry standard ft^3/min

* Based on fan data obtained from the designer and builder of the gin. The fan data is at ambient temperature, which is approximately 70° F. Barometric pressures measured during the testing were within one percent of 29.92 in. of Hg. Therefore, the given flows are considered to be at standard conditions.

Company Halls Gin Co. Test Date Oct. 25, 1988

Suck Pipe Quad

Cyclone I.D. Cyclone 1D

Point No.	1	2	3	4	5	6
Point ΔP	1.5	1.5				
SR60 = sampling rate through orifice at 60°F (see Note 1 on third page following)	31.828	31.828				
T_o = average temperature of orifice (°F)	95	95				
$SR = \frac{(SR60)(T_o + 460)}{520}$ (SR = Sampling rate in ft/min)	33.970	33.970				
T_p = time per sample point (min)	7.5	7.5				

Run #	1	2	3	Ave.
$SV = (T_p)_1 (SR)_1 + (T_p)_2 (SR)_2 + \ldots$ (SV = total sample volume in ft^3)	509.6	509.6	509.6	
T_t = total sampling time (min.)	15	15	15	
$ASV_{ft^3/min} = \frac{SV}{T_t}$ (ASV = average volume sampled)	33.970	33.970	33.970	
T_E = average temperature of exit (°F)	100	98	98	
M_E = molecular weight of exit gases (weighted averages of molecular weights obtained in inlet ducts)	28.70	28.70	28.70	
P_{bar} = barometric pressure	29.79	29.79	29.79	
C_p = 0.99 (pitot tube coeficient)	0.99	0.99	0.99	
$V_E = (85.48)(C_p)\left[AVE\sqrt{\Delta P_E}\right]\left[\sqrt{\frac{(T_E + 460)}{(M_E)(P_{bar})}}\right]$ (VE = average velocity at sampling points ft/sec)	83.9	83.7	83.7	
d_n = diameter of nozzle (in.)	1.116	1.116	1.116	

Company Halls Gin Co. Test Date Oct. 25, 1988

Cyclone I.D. Suck Pipe Quad Cyclone 1D

Run #	1	2	3	Ave.
$A_n = \frac{\pi \times (d_n)^2}{4}$ (An = area of nozzle in.^{2})	0.978	0.978	0.978	
$V_n = \frac{(ASV)(T_E + 460)(2.4)}{(A_n)(T_o + 460)}$ (Vn = average velocity in nozzle ft/sec)	84.1	83.8	83.8	
$P_I = \frac{(100)(Vn)}{V_E}$ (PI = percent isokinetic)	100	100	100	
TP = total weight of particulate caught in sampler during a run (g.)	0.0854	0.0928	0.0720	
FW = gain in weight of filter during a run (g.)	0.0670	0.0744	0.0536	
FB = gain in weight of blank filter (to compensate for filter handling) (g.)	-0.0045	-0.0045	-0.0045	
AW = gain in weight from acetone wash of sampler at end of each series of runs (complete test) (g.)	0.0500	0.0500	0.0500	
AB = gain in weight of blank volume of acetone (to compensate for impurities in acetone) (g.)	0.0083	0.0083	0.0083	
N = number of runs in each test over which only a single probe wash occurs	3	3	3	
$TP = FW - FB + \frac{AW - AB}{N}$ (TP = total particulate catch per sample run)	0.0854	0.0928	0.0720	

Company Halls Gin Co. Test Date Oct. 25, 1988

Suck Pipe Quad

Cyclone I.D. Cyclone 1D

Run #	1	2	3	Ave.
M_s = percent moisture in exit gases (weighted averages of percent moistures obtained in inlet ducts)	2.7	2.7	2.7	
$QS_{std} = \frac{(SV)(17.71)(P_{bar})(1-\frac{Ms}{100})}{(T_o + 460)}$ (QSstd = total volume sampled at standard conditions ft^3)	471.3	471.3	471.3	
C_s (gr/dscf) = $\frac{(15.43)(TP)}{(QS_{std})}$ (Cs = particulate concentration)	0.0028	0.0030	0.0024	0.0027
$PMR_{lb/hr} = (C_s)(TQ_{std})(0.00857)$ TQ_{std} = (total air into cyclone) (PMR = mass emission rate)	0.07 .0671	0.07 .0719	0.06 .0575	0.07

(Note 1)

The rate of air flow through the orifice is precalculated for all pressure drops across the orifice using the various nozzles for an orifice temperature of 60°F. This figure is then converted to the actual air flow at the orifice temperature by the equation:

$$SR = \frac{(SR60)(T_o = 460)}{520}$$

Where: SR60 = sampling rate through orifice at 60°F
To = average temperature of orifice (°F)

JS/ah/APCHd1

RADER I
CYCLONE 1.D
BLANK
10/25/88
HALLS COTTON GIN
SACK PIPE QUAD

Filter No. 001610

City & Station

Date Start ____ Mo ____ Day ____ Yr ____ Hr

Flow Time
Stop ____ Stop ____

Date Stop ____ Mo ____ Day ____ Yr ____ Hr

Start ____ Start ____

Ave ____ Total ____

Remarks

Wt Sample & Filter 4.3297

Wt Filter 4.3342

Wt Sample 0.0045

Filter Conc.

Initial weighing by WCH DATE 10-7-88

Final weighing by WCH Date 11-7-88

Metals sample taken by ____ Date ____

Microscopic sample taken by ____ Date ____

Sample Custody

1. Collected by ____ Date ____
   Delivered to ____ Date ____
2. Received by ____ Date ____
   Delivered to ____ Date ____
3. Received by ____ Date ____
   Delivered to ____ Date ____
4. Received in laboratory by ____
   Date ____ from ____

PH-2857
LAB 8/88

RADER I
CYCLONE ID
RUN #11
10/05/88
HALLS COTTONGIN
SUCK PIPE-OMAN

Filter No. 001611

City & Station

Date Start ___ Mo ___ Day ___ Yr ___ Hr

Flow Time
Stop ___ Stop ___
Start ___ Start ___
Ave ___ Total ___

Date Stop ___ Mo ___ Day ___ Yr ___ Hr

Remarks

Wt Sample & Filter 4.3852

Wt Filter 4.3182

Wt Sample 0.0670

Filter Conc.

Initial weighing by
WCH DATE 10-2-88

Final weighing by
WCH Date 11-7-88

Metals sample taken by ___ Date ___

Microscopic sample taken by ___ Date ___

Sample Custody

1. Collected by ___ Date ___
   Delivered to ___ Date ___
2. Received by ___ Date ___
   Delivered to ___ Date ___
3. Received by ___ Date ___
   Delivered to ___ Date ___
4. Received in laboratory by ___
   Date ___ from ___

PH-2857
LAB 8/86

Radex I
Cyclone 1D
Run #2
10/25/88
Hall Cotton Gin
Suck Pipe Quad

Filter No. 001614

City & Station

Date Start Mo Day Yr Hr

Date Stop Mo Day Yr Hr

Flow Time
Stop Stop
Start Start
Ave Total

Remarks

Wt Sample & Filter 4.4795

Wt Filter 4.4051

Wt Sample 0.0744

Filter Conc.

Initial weighing by WCH DATE 10-7-88

Final weighing by WCH Date 11-7-88

Metals sample taken by Date

Microscopic sample taken by Date

Sample Custody

1. Collected by Date
   Delivered to Date
2. Received by Date
   Delivered to Date
3. Received by Date
   Delivered to Date
4. Received in laboratory by
   Date from

PH-2657
LAB 8/86

Cadet I
Cyclone 1D
Run #3
10/25/88
Halls Cotton Gin
Suck Pipe Quad

Filter No. 001G1C

City & Station

Date Start ____ Mo ____ Day ____ Yr ____ Hr

Date Stop ____ Mo ____ Day ____ Yr ____ Hr

Flow Time
Stop ____ Stop ____
Start ____ Start ____
Ave ____ Total ____

Remarks

Wt Sample & Filter 4.4682

Wt Filter 4.4146

Wt Sample 0.0536

Filter Conc.

Initial weighing by WCH DATE 10-7-88

Final weighing by WCH Date 11-7-88

Metals sample taken by ____ Date ____

Microscopic sample taken by ____ Date ____

Sample Custody

1. Collected by ____ Date ____
   Delivered to ____ Date ____
2. Received by ____ Date ____
   Delivered to ____ Date ____
3. Received by ____ Date ____
   Delivered to ____ Date ____
4. Received in laboratory by ____
   Date ____ from ____

PH-2857
LAB 9/88

SOURCE SAMPLING PARTICULATE LAB DATA (method 5), Sheet APC 600

Company Hall's TN Cotton Gin Company No. _____

Process Suck Pipe Quad Cyclone LD Test Date 10-25-88

ACETONE BLANK APC 596

Run No.			
Beaker No.	1		
Acetone Volume, ml.			
Beaker + Acetone Residue Wt., g	111.8819		
Beaker tare weight, g	111.8793		
Net weight, g	0.0026		
Residue factor (R.f.), g/ml ($\frac{\text{net wt.}}{\text{acetone vol.}}$)	0.00002		)

FRONT HALF ACETONE WASH APC 600

Run. No.	1,2,3		
Beaker No.	8	9	
Wash vol., ml	200	200	400 total
Gross residue wt.g.	0.0258	0.0242	
Blank wt., g (R.f. x wash vol.)	0.0040	0.0040	
Net wt., g.	0.0218	0.0202	0.0420 total

CYCLONE FIELD DATA FORM

Company Halls Gin Co. Date Oct, 26, 1988

Cyclone I. D. 1B Inclined Cleaner Cyclone 2A

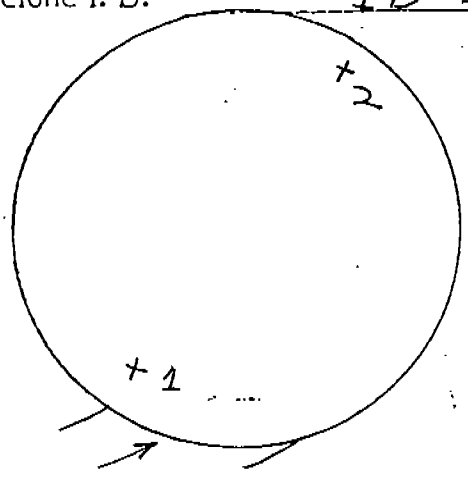

Approximate area of measurable flow and points sampled

Point #	ΔP	ΔH
1	1.5	0.328
2	1.5	0.328

exit dry bulb 120°F

exit wet bulb 98°F

train # 1

nozzle diameter 1.116

orifice temp. see below

barometric pressure 29.89

CYCLONE DIMENSIONS: CHECK THE APPROPRIATE EXIT CONFIGURATION.

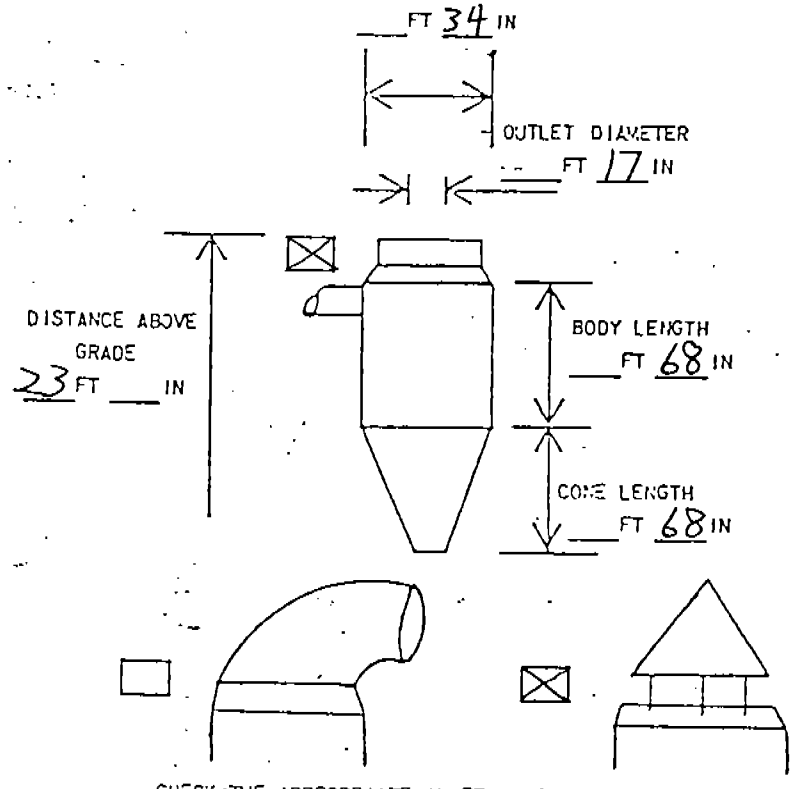

CHECK THE APPROPRIATE INLET CONFIGURATION:

If different from above draw diagram below:

COMMENTS

Run #	Time	T_s (°F)	T_o (°F)
1	9:36-9:52 AM	122	105
2	9:58-10:14 AM	122	105
3	10:20-10:36 AM	120	105

CALCULATION OF ACTUAL EMISSIONS

HALLS GIN COMPANY (49-00074)

Source Identification 1B Inclined Cleaner Cyclone 2A

Test Date Oct. 26, 1988

Q = actual airflow in ft^3/min* 2,750

T_d = dry bulb temperature at exhaust point 120°F

T_w = wet bulb temperature at exhaust point 98°F

M = percent moisture in exhaust gases 6.1%

P_{bar} = barometric pressure 29.89

$$Q_{std} = (Q)\left(1 - \frac{M}{100}\right)$$

2,582

Q_{std} in dry standard ft^3/min

* Based on fan data obtained from the designer and builder of the gin. The fan data is at ambient temperature, which is approximately 70° F. Barometric pressures measured during the testing were within one percent of 29.92 in. of Hg. Therefore, the given flows are considered to be at standard conditions.

Company Halls Gin Co. Test Date Oct. 26, 1988

1B Inclined Cleaner

Cyclone I.D. Cyclone 2A

Point No.	1	2	3	4	5	6
Point ΔP	1.5	1.5				
SR60 = sampling rate through orifice at 60°F (see Note 1 on third page following)	31.275	31.275				
T_o = average temperature of orifice (°F)	105	105				
$SR = \frac{(SR60)(T_o + 460)}{520}$ (SR = Sampling rate in ft/min)	33.981	33.981				
T_p = time per sample point (min)	7.5	7.5				

Run #	1	2	3	Ave.
$SV = (T_p)_1 (SR)_1 + (T_p)_2 (SR)_2 + \ldots$ (SV = total sample volume in ft^3)	509.72	509.72	509.72	
T_t = total sampling time (min.)	15	15	15	
$ASV_{ft^3/min} = \frac{SV}{T_t}$ (ASV = average volume sampled)	33.981	33.981	33.981	
T_E = average temperature of exit (°F)	122	122	120	
M_E = molecular weight of exit gases (weighted averages of molecular weights obtained in inlet ducts)	28.33	28.33	28.33	
P_{bar} = barometric pressure	29.89	29.89	29.89	
C_p = 0.99 (pitot tube coeficient)	0.99	0.99	0.99	
$V_E = (85.48)(C_p)\left[\text{AVE}\sqrt{\Delta P_E}\right]\left[\sqrt{\frac{(T_E + 460)}{(M_E)(P_{bar})}}\right]$ (VE = average velocity at sampling points ft/sec)	85.9	85.9	85.8	
d_n = diameter of nozzle (in.)	1.116	1.116	1.116	

Company Halls Gin Co. Test Date Oct. 26, 1988

1B Inclined Cleaner

Cyclone I.D. Cyclone 2A

Run #	1	2	3	Ave.
$A_n = \frac{\pi \times (d_n)^2}{4}$ (An = area of nozzle in.^{2})	0.978	0.978	0.978	
$V_n = \frac{(ASV)(T_E + 460)(2.4)}{(A_n)(T_o + 460)}$ (Vn = average velocity in nozzle ft/sec)	85.9	85.9	85.6	
$P_I = \frac{(100)(Vn)}{V_E}$ (PI = percent isokinetic)	100	100	100	
TP = total weight of particulate caught in sampler during a run (g.)	0.2612	0.3794	0.5324	
FW = gain in weight of filter during a run (g.)	0.2098	0.3280	0.4810	
FB = gain in weight of blank filter (to compensate for filter handling) (g.)	0.0002	0.0002	0.0002	
AW = gain in weight from acetone wash of sampler at end of each series of runs (complete test) (g.)	0.1574	0.1574	0.1574	
AB = gain in weight of blank volume of acetone (to compensate for impurities in acetone) (g.)	0.0027	0.0027	0.0027	
N = number of runs in each test over which only a single probe wash occurs	3	3	3	
$TP = FW - FB + \frac{AW - AB}{N}$ (TP = total particulate catch per sample run)	0.2612	0.3794	0.5324	

Company Halls Gin Co. Test Date Oct. 26, 1988

1B Inclined Cleaner

Cyclone I.D. Cyclone 2A

Run #	1	2	3	Ave.
M_S = percent moisture in exit gases (weighted averages of percent moistures obtained in inlet ducts)	6.1	6.1	6.1	
$QS_{std} = \frac{(SV)(17.71)(P_{bar})(1-\frac{Ms}{100})}{(T_o + 460)}$ (QSstd = total volume sampled at standard conditions ft^3)	448.4	448.4	448.4	
C_s (gr/dscf) = $\frac{(15.43)(TP)}{(QS_{std})}$ (Cs = particulate concentration)	0.0090	0.0131	0.0183	0.0135
$PMR_{lb/hr} = (C_s)(TQ_{std})(0.00857)$ TQ_{std} = (total air into cyclone) (PMR = mass emission rate)	0.20 0.199	0.29 [illegible]	0.41 0.405	0.30

(Note 1)

The rate of air flow through the orifice is precalculated for all pressure drops across the orifice using the various nozzles for an orifice temperature of 60°F. This figure is then converted to the actual air flow at the orifice temperature by the equation:

$$SR = \frac{(SR60)(T_o = 460)}{520}$$

Where: SR60 = sampling rate through orifice at 60°F
To = average temperature of orifice (°F)

JS/ah/APCHd1

RADER I
HB INCLINE CLEAN
CYCLONE 2A
BLANK
10/26/88
HAUS CONDON GN

Filter No. 001628

City & Station

Date Start ____ Mo ____ Day ____ Yr ____ Hr

Flow Time
Stop ____ Stop ____

Date Stop ____ Mo ____ Day ____ Yr ____ Hr

Start ____ Start ____

Ave ____ Total ____

Remarks

Wt Sample & Filter 4.3677

Wt Filter 4.3675

Wt Sample 0.0002

Filter Conc.

Initial weighing by WCH DATE 10-7-88

Final weighing by WCH Date 11-7-88

Metals sample taken by ____ Date ____

Microscopic sample taken by ____ Date ____

Sample Custody

1. Collected by ____ Date ____
   Delivered to ____ Date ____
2. Received by ____ Date ____
   Delivered to ____ Date ____
3. Received by ____ Date ____
   Delivered to ____ Date ____
4. Received in laboratory by ____
   Date ____ from ____

PII-2857
LAB 8/86

Paper I
1B Incline Crew
Cyclone 2A
Run #1
10/26/88.
Hills Cottonwood

Filter No. 001623

City & Station

Date Start ____ Mo ____ Day ____ Yr ____ Hr

Flow Time
Stop ____ Stop ____

Date Stop ____ Mo ____ Day ____ Yr ____ Hr

Start ____ Start ____

Ave ____ Total ____

Remarks

Wt Sample & Filter 4.6011 4.6065 11-9-88

Wt Filter 4.3913

Wt Sample 0.2098

Filter Conc.

Initial weighing by WCH DATE 10-7-88

Final weighing by WCH Date 11-7-88

Metals sample taken by ____ Date ____

Microscopic sample taken by ____ Date ____

Sample Custody

1. Collected by ____ Date ____
   Delivered to ____ Date ____
2. Received by ____ Date ____
   Delivered to ____ Date ____
3. Received by ____ Date ____
   Delivered to ____ Date ____
4. Received in laboratory by ____
   Date ____ from ____

PH-2857
LAB 8/88

Rider I
1B Incline Cleaner
Cyclone 2A
Run #2
10/26/88
Halls Cotton Gin

Filter No. 001631

City & Station

Date Start ____ Mo ____ Day ____ Yr ____ Hr

Flow Time
Stop ____ Stop ____

Date Stop ____ Mo ____ Day ____ Yr ____ Hr

Start ____ Start ____

Ave ____ Total ____

Remarks

Wt Sample & Filter 4.6790

Wt Filter 4.3510

Wt Sample 0.3280

Filter Conc.

Initial weighing by WCH DATE 10-7-88

Final weighing by WCH Date 11-7-88

Metals sample taken by ____ Date ____

Microscopic sample taken by ____ Date ____

Sample Custody

1. Collected by ____ Date ____
   Delivered to ____ Date ____
2. Received by ____ Date ____
   Delivered to ____ Date ____
3. Received by ____ Date ____
   Delivered to ____ Date ____
4. Received in laboratory by ____
   Date ____ from ____

PH-2857
LAB 8/88

Lader I
115 Incline Cleaner
Cyclone 2A
Run #3
10/26/88
Halls Cotton Gin

Filter No. D01633

City & Station

Date Start ____ Mo ____ Day ____ Yr ____ Hr

Flow Time
Stop ____ Stop ____

Date Stop ____ Mo ____ Day ____ Yr ____ Hr

Start ____ Start ____

Ave ____ Total ____

Remarks

Wt Sample & Filter 4.8493

Wt Filter 4.3683 4.3680 ucs 10-12-88

Wt Sample 0.4810

Initial weighing by WCH DATE 10-10-88

Final weighing by WCH Date 11-7-88

Filter Conc.

Metals sample taken by ____ Date ____

Microscopic sample taken by ____ Date ____

Sample Custody

1. Collected by ____ Date ____
   Delivered to ____ Date ____
2. Received by ____ Date ____
   Delivered to ____ Date ____
3. Received by ____ Date ____
   Delivered to ____ Date ____
4. Received in laboratory by ____
   Date ____ from ____

PII-2657
LAB 8/86

SOURCE SAMPLING PARTICULATE LAB DATA (method 5), Sheet APC 604

Company Halls, TN Cotton Gin Company No. _____

Process 1B Incline Cleaner Cyclone 2A Test Date 10-26-88

ACETONE BLANK APC 603

Run No.			
Beaker No.	12	13	
Acetone Volume, ml.	150	130	280 total
Beaker + Acetone Residue Wt., g	110.4916	108.3142	
Beaker tare weight, g	110.4892	108.3128	
Net weight, g	0.0024	0.0014	0.0038 total
Residue factor (R.f.), g/ml ($\frac{\text{net wt.}}{\text{acetone vol.}}$)			0.00001

FRONT HALF ACETONE WASH APC 604

Run. No.	1,2+3		
Beaker No.	14		
Wash vol., ml	200		
Gross residue wt.g.	0.1574		
Blank wt., g (R.f. x wash vol.)	0.0020		
Net wt., g.	0.1554		

CYCLONE FIELD DATA FORM

Company Halls Gin Co. Date Oct. 26, 1988

Cyclone I. D. 1B Inclined Cleaner Cyclone 2B

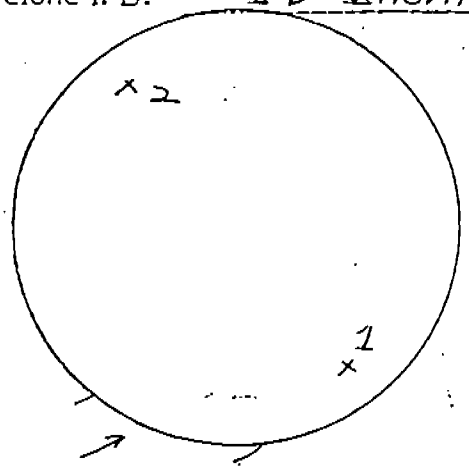

Approximate area of measurable flow and points sampled

point #	ΔP	ΔH
1	1.5	0.328
2	1.5	0.328

CYCLONE DIMENSIONS: CHECK THE APPROPRIATE EXIT CONFIGURATIO

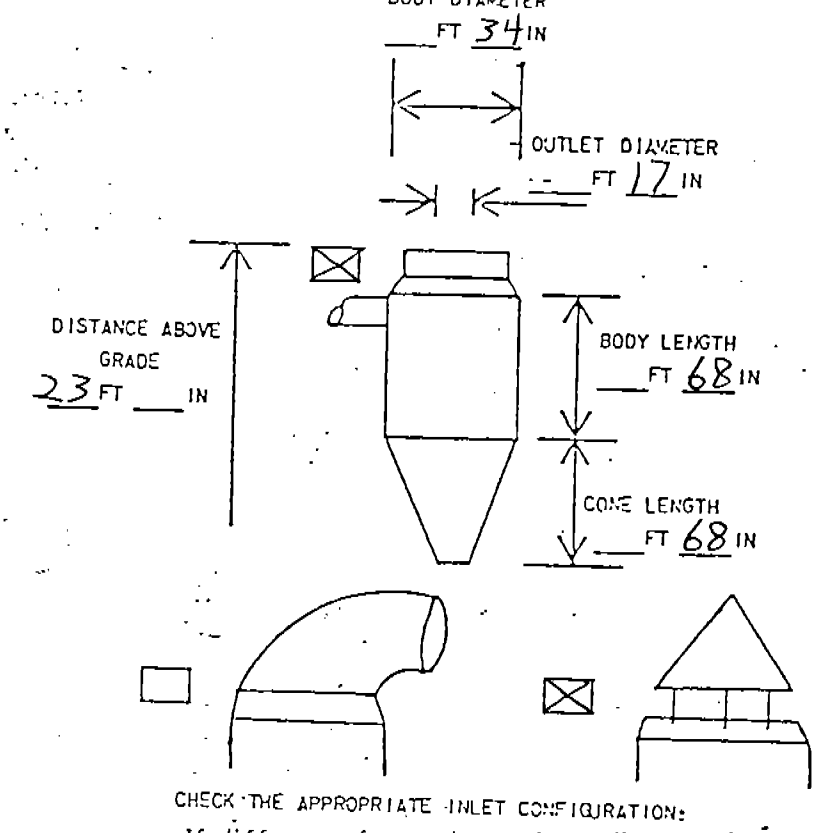

CHECK THE APPROPRIATE INLET CONFIGURATION:

If different from above draw diagram below:

exit dry bulb 120°F

exit wet bulb 98°F

train # 1

nozzle diameter 1.116

orifice temp. see below

barometric pressure 29.84

COMMENTS	Run #	Time	T_s (°F)	T_o (°F)
	1	8:17-8:34 AM	120	100
	2	8:45-9:01 AM	122	95
	3	9:08-9:25 AM	120	105

CALCULATION OF ACTUAL EMISSIONS

HALLS GIN COMPANY (49-00074)

Source Identification 1B Inclined Cleaner Cyclone 2B

Test Date Oct. 26, 1988

Q = actual airflow in ft^3/min* 2,750

T_d = dry bulb temperature at exhaust point 120°F

T_w = wet bulb temperature at exhaust point 98°F

M = percent moisture in exhaust gases 6.1%

P_{bar} = barometric pressure 29.84

$$Q_{std} = (Q)\left(1 - \frac{M}{100}\right)$$

2,582

Q_{std} in dry standard ft^3/min

* Based on fan data obtained from the designer and builder of the gin. The fan data is at ambient temperature, which is approximately 70° F. Barometric pressures measured during the testing were within one percent of 29.92 in. of Hg. Therefore, the given flows are considered to be at standard conditions.

Company Halls Gin Co. Test Date Oct. 26, 1988

1B Inclined Cleaner

Cyclone I.D. Cyclone 2B

Page 1 of 3

Point No.	1	2	1/3	2/4	1/5	2/6
	Run 1		Run 2		Run 3	
Point ΔP	1.5	1.5	1.5	1.5	1.5	1.5
SR60 = sampling rate through orifice at 60°F (see Note 1 on third page following)	31.275	31.275	31.275	31.275	31.275	31.275
T_o = average temperature of orifice (°F)	100	100	95	95	105	105
$SR = \frac{(SR60)(T_o + 460)}{520}$ (SR = Sampling rate in ft/min)	33.681	33.681	33.380	33.380	33.981	33.981
T_p = time per sample point (min)	7.5	7.5	7.5	7.5	7.5	7.5

Run #	1	2	3	Ave.
$SV = (T_p)_1 (SR)_1 + (T_p)_2 (SR)_2 + \ldots$ (SV = total sample volume in ft^3)	505.2	500.7	509.7	
T_t = total sampling time (min.)	15	15	15	
$ASV_{ft^3/min} = \frac{SV}{T_t}$ (ASV = average volume sampled)	33.681	33.380	33.981	
T_E = average temperature of exit (°F)	120	122	120	
M_E = molecular weight of exit gases (weighted averages of molecular weights obtained in inlet ducts)	28.33	28.33	28.33	
P_{bar} = barometric pressure	29.84	29.84	29.84	
C_p = 0.99 (pitot tube coeficient)	0.99	0.99	0.99	
$V_E = (85.48)(C_p)\left[AVE\sqrt{\Delta P_E}\right]\left[\sqrt{\frac{(T_E + 460)}{(M_E)(P_{bar})}}\right]$ (VE = average velocity at sampling points ft/sec)	85.8	86.0	85.8	
d_n = diameter of nozzle (in.)	1.116	1.116	1.116	

Company Halls Gin Co. Test Date Oct. 26, 1988

Cyclone I.D. 1B Inclined Cleaner Cyclone 2B

Run #	1	2	3	Ave.
$A_n = \frac{\pi \times (d_n)^2}{4}$ (An = area of nozzle in.^{2})	0.978	0.978	0.978	
$V_n = \frac{(ASV)(T_E + 460)(2.4)}{(A_n)(T_o + 460)}$ (Vn = average velocity in nozzle ft/sec)	85.6	85.9	85.6	
$P_1 = \frac{(100)(Vn)}{V_E}$ (P1 = percent isokinetic)	100	100	100	
TP = total weight of particulate caught in sampler during a run (g.)	0.3792	0.3850	0.3660	
FW = gain in weight of filter during a run (g.)	0.3341	0.3399	0.3209	
FB = gain in weight of blank filter (to compensate for filter handling) (g.)	-0.0019	-0.0019	-0.0019	
AW = gain in weight from acetone wash of sampler at end of each series of runs (complete test) (g.)	0.1319	0.1319	0.1319	
AB = gain in weight of blank volume of acetone (to compensate for impurities in acetone) (g.)	0.0024	0.0024	0.0024	
N = number of runs in each test over which only a single probe wash occurs	3	3	3	
$TP = FW - FB + \frac{AW - AB}{N}$ (TP = total particulate catch per sample run)	0.3792	0.3850	0.3660	

Company Halls Gin Co. Test Date Oct. 26, 1988

1B Inclined Cleaner

Cyclone I.D. Cyclone 2B

Run #	1	2	3	Ave.
M_s = percent moisture in exit gases (weighted averages of percent moistures obtained in inlet ducts)	6.1	6.1	6.1	
$QS_{std} = \frac{(SV)\ (17.71)\ (P_{bar})\ (1-\frac{Ms}{100})}{(T_o + 460)}$ (QSstd = total volume sampled at standard conditions ft^3)	447.7	447.7	447.7	
C_s (gr/dscf) $= \frac{(15.43)\ (TP)}{(QS_{std})}$ (Cs = particulate concentration)	0.0131	0.0133	0.0126	0.0130
$PMR_{lb/hr} = (C_s)\ (TQ_{std})\ (0.00857)$ TQ_{std} = (total air into cyclone) (PMR = mass emission rate)	0.29	0.29	0.28	0.29

(Note 1)

The rate of air flow through the orifice is precalculated for all pressure drops across the orifice using the various nozzles for an orifice temperature of 60°F. This figure is then converted to the actual air flow at the orifice temperature by the equation:

$$SR = \frac{(SR60)\ (T_o = 460)}{520}$$

Where: SR60 = sampling rate through orifice at 60°F
To = average temperature of orifice (°F)

JS/ah/APCHd1

Block I
Cyclone QB
BLANK
10/30/78
Hales Cotton Gin
18 Inches Cleaner

Filter No. 001618

City & Station

Date Start ___ Mo ___ Day ___ Yr ___ Hr

Flow Time
Stop ___ Stop ___

Date Stop ___ Mo ___ Day ___ Yr ___ Hr

Start ___ Start ___
Ave ___ Total ___

Remarks

Wt Sample & Filter 4.4049

Wt Filter 4.4068

Wt Sample 0.0019

Filter Conc.

Initial weighing by
WCH DATE 10-7-88

Final weighing by
WCH Date 11-7-88

Metals sample taken by ___ Date ___

Microscopic sample taken by ___ Date ___

Sample Custody

1. Collected by ___ Date ___
   Delivered to ___ Date ___
2. Received by ___ Date ___
   Delivered to ___ Date ___
3. Received by ___ Date ___
   Delivered to ___ Date ___
4. Received in laboratory by ___
   Date ___ from ___

PH-2857
LAB 8/88

Phase I
Cyclone 3B
Run #1
10/26/88
Hills Cotton Gin
1B Incline Cleaner

Filter No. 001619

City & Station

Date Start Mo Day Yr Hr

Date Stop Mo Day Yr Hr

Flow Time
Stop Stop
Start Start
Ave Total

Remarks

Wt Sample & Filter 4.7526 4.7598 INT 11-9-88

Wt Filter 4.4185

Wt Sample 0.3341

Filter Conc.

Initial weighing by
WCH DATE 10-7-88

Final weighing by
WCH Date 11-7-88

Metals sample taken by Date

Microscopic sample taken by Date

Sample Custody

1. Collected by Date
   Delivered to Date
2. Received by Date
   Delivered to Date
3. Received by Date
   Delivered to
4. Received in laboratory by
   Date from

PII-2857
LAB 8/86

Piper I
Cyclone 2B
1B Incoming Cleaner
Run #2
10/26/88
Hails Cotton Gin

Filter No. 001022

City & Station

Date Start Mo Day Yr Hr

Date Stop Mo Day Yr Hr

Flow Time
Stop Stop
Start Start
Ave Total

Remarks

Wt Sample & Filter 4.7611

Wt Filter 4.4212

Wt Sample 0.3399

Filter Conc.

Initial weighing by WCH DATE 10-7-88

Final weighing by WCH Date 11-7-88

Metals sample taken by Date

Microscopic sample taken by Date

Sample Custody

1. Collected by Date
   Delivered to Date
2. Received by Date
   Delivered to Date
3. Received by Date
   Delivered to Date
4. Received in laboratory by
   Date from

PH-2857
LAB 8/88

Rader I
Cyclone 2B
HS Incline Cleaner
Run #3
10/26/88
Halls Cotton Gin

Filter No. 001625 ~~001625~~

City & Station

Date Start ____ Mo ____ Day ____ Yr ____ Hr

Flow Time
Stop ____ Stop ____

Date Stop ____ Mo ____ Day ____ Yr ____ Hr

Start ____ Start ____

Ave ____ Total ____

Remarks

Wt Sample & Filter 4.7209

Wt Filter 4.4000

Wt Sample 0.3209

Filter Conc.

Initial weighing by WCH DATE 10-7-88

Final weighing by WCH Date 11-7-88

Metals sample taken by ____ Date ____

Microscopic sample taken by ____ Date ____

Sample Custody

1. Collected by ____ Date ____
   Delivered to ____ Date ____
2. Received by ____ Date ____
   Delivered to ____ Date ____
3. Received by ____ Date ____
   Delivered to ____ Date ____
4. Received in laboratory by ____
   Date ____ from ____

PH-2857
LAB 8/86

SOURCE SAMPLING PARTICULATE LAB DATA (method 5), Sheet APC 625

Company Halls, TN Cotton Gin Company No. _____

Process 1B Incline Cleaner 2B Test Date 10-26-88

ACETONE BLANK APC 603

Run No.	_____	_____	_____
Beaker No.	12	13	_____
Acetone Volume, ml.	150	130	280 total
Beaker + Acetone Residue Wt., g	110.4916	118.3142	_____
Beaker tare weight, g	110.4892	108.3128	_____
Net weight, g	0.0024	0.0014	0.0038 total
Residue factor (R.f.), g/ml ($\frac{\text{net wt.}}{\text{acetone vol.}}$)	_____	_____	0.00001)

FRONT HALF ACETONE WASH APC 605

Run. No.	1 2 + 3	_____	_____
Beaker No.	15	_____	_____
Wash vol., ml	180	_____	_____
Gross residue wt.g.	0.1319	_____	_____
Blank wt., g (R.f. x wash vol.)	0.0018	_____	_____
Net wt., g.	0.1301	_____	_____

CYCLONE FIELD DATA FORM

Company HALLS GIN Co. Date Oct. 25, 1988

Cyclone I. D. 3A

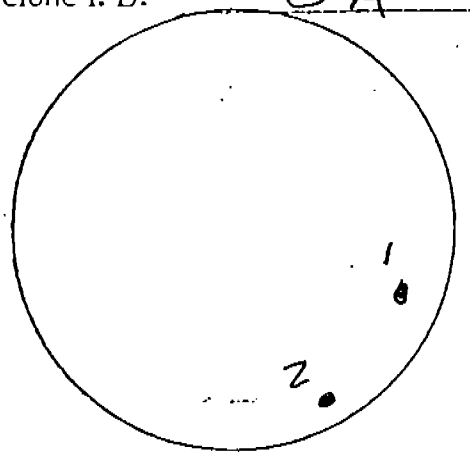

Approximate area of measurable flow and points sampled

point #	ΔP	ΔH
1	1.5	.18
2	1.5	.18

exit dry bulb 132

exit wet bulb 111

train # 2

nozzle diameter .937

orifice temp. see below

barometric pressure 29.79

CYCLONE DIMENSIONS: CHECK THE APPROPRIATE EXIT CONFIGURATION

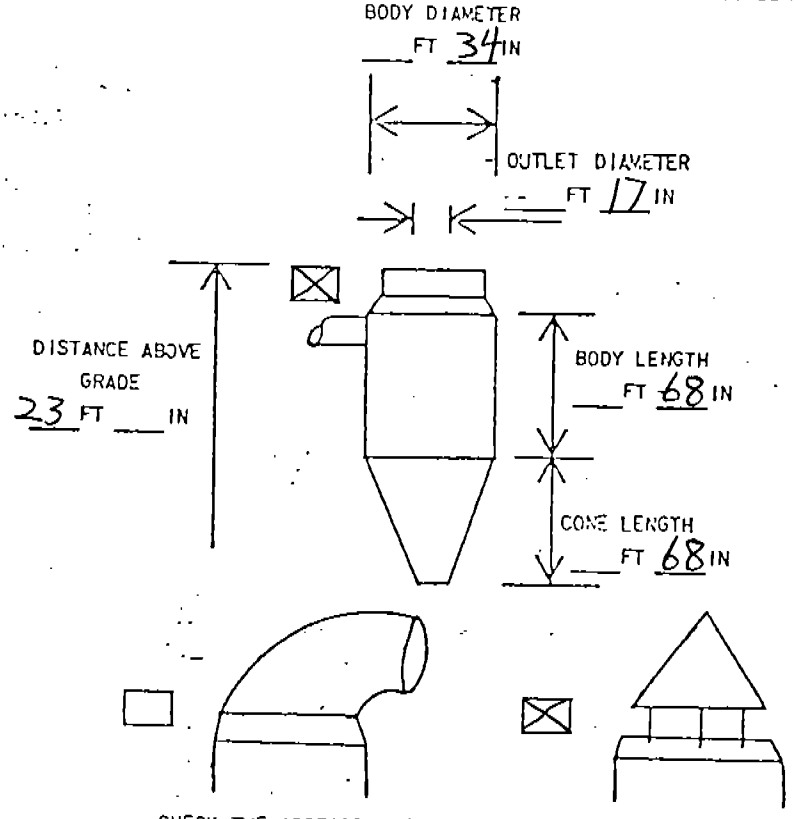

CHECK THE APPROPRIATE INLET CONFIGURATION:

If different from above draw diagram below:

COMMENTS

RUN #	TIME	T_s (°F)	T_o (°F)
1	1325-1340	132°	131°
2	1353-1400 / 1555-1602	132°	130°
3	1605-1620	130°	130°

CALCULATION OF ACTUAL EMISSIONS

HALLS GIN COMPANY (49-00074)

Source Identification 1A Inclined Cleaner Cyclone 3A

Test Date Oct. 25, 1988

Q = actual airflow in ft^3/min* 2,750

T_d = dry bulb temperature at exhaust point 132°F

T_w = wet bulb temperature at exhaust point 111°F

M = percent moisture in exhaust gases 8.9%

P_{bar} = barometric pressure 29.79

$$Q_{std} = (Q)\ (1 - \frac{M}{100})$$

2,505

Q_{std} in dry standard ft^3/min

* Based on fan data obtained from the designer and builder of the gin. The fan data is at ambient temperature, which is approximately 70° F. Barometric pressures measured during the testing were within one percent of 29.92 in. of Hg. Therefore, the given flows are considered to be at standard conditions.

Company Halls Gin Co. Test Date Oct. 25, 1988

1A Inclined Cleaner

Cyclone I.D. Cyclone 3A

Point No.	1	2	3	1 4	2 5	6
	run 1			runs 2 & 3		
Point ΔP	1.5	1.5		1.5	1.5	
SR60 = sampling rate through orifice at 60°F (see Note 1 on third page following)	21.859	21.859		21.859	21.859	
T_o = average temperature of orifice (°F)	131	131		130	130	
$SR = \frac{(SR60)(T_o + 460)}{520}$ (SR = Sampling rate in ft/min)	24.844	24.844		24.802	24.802	
T_p = time per sample point (min)	7.5	7.5		7.5	7.5	

Run #	1	2	3	Ave.
$SV = (T_p)_1 (SR)_1 + (T_p)_2 (SR)_2 + \ldots$ (SV = total sample volume in ft^3)	372.7	372.0	372.0	
T_t = total sampling time (min.)	15	15	15	
$ASV_{ft^3/min} = \frac{SV}{T_t}$ (ASV = average volume sampled)	24.844	24.802	24.802	
T_E = average temperature of exit (°F)	132	132	130	
M_E = molecular weight of exit gases (weighted averages of molecular weights obtained in inlet ducts)	28.02	28.02	28.02	
P_{bar} = barometric pressure	29.79	29.79	29.79	
C_p = 0.99 (pitot tube coeficient)	0.99	0.99	0.99	
$V_E = (85.48)(C_p)\left[\text{AVE}\sqrt{\Delta P_E}\right]\left[\sqrt{\frac{(T_E + 460)}{(M_E)(P_{bar})}}\right]$ (VE = average velocity at sampling points ft/sec)	87.3	87.3	87.1	
d_n = diameter of nozzle (in.)	0.937	0.937	0.937	

Company Halls Gin Co. Test Date Oct. 25, 1988

1A Inclined Cleaner

Cyclone I.D. Cyclone 3A

Run #	1	2	3	Ave.
$A_n = \frac{\pi \times (d_n)^2}{4}$ (An = area of nozzle in.^{2})	0.690	0.690	0.690	
$V_n = \frac{(ASV)(T_E + 460)(2.4)}{(A_n)(T_o + 460)}$ (Vn = average velocity in nozzle ft/sec)	86.6	86.6	86.3	
$P_1 = \frac{(100)(Vn)}{V_E}$ (P1 = percent isokinetic)	99	99	99	
TP = total weight of particulate caught in sampler during a run (g.)	0.1397	0.1255	0.1746	
FW = gain in weight of filter during a run (g.)	0.1142	0.1000	0.1491	
FB = gain in weight of blank filter (to compensate for filter handling) (g.)	-0.0050	-0.0050	-0.0050	
AW = gain in weight from acetone wash of sampler at end of each series of runs (complete test) (g.)	0.0658	0.0658	0.0658	
AB = gain in weight of blank volume of acetone (to compensate for impurities in acetone) (g.)	0.0043	0.0043	0.0043	
N = number of runs in each test over which only a single probe wash occurs	3	3	3	
$TP = FW - FB + \frac{AW - AB}{N}$ (TP = total particulate catch per sample run)	0.1397	0.1255	0.1746	

Company Halls Gin Co. Test Date Oct. 25, 1988

1A Inclined Cleaner

Cyclone I.D. Cyclone 3A

Run #	1	2	3	Ave.
M_s = percent moisture in exit gases (weighted averages of percent moistures obtained in inlet ducts)	8.9	8.9	8.9	
$QS_{std} = \frac{(SV)(17.71)(P_{bar})(1-\frac{Ms}{100})}{(T_o + 460)}$ (QSstd = total volume sampled at standard conditions ft^3)	303.0	303.0	303.0	
C_s (gr/dscf) = $\frac{(15.43)(TP)}{(QS_{std})}$ (Cs = particulate concentration)	0.0071	0.0064	0.0089	0.0075
$PMR_{lb/hr} = (C_s)(TQ_{std})(0.00857)$ TQ_{std} = (total air into cyclone) (PMR = mass emission rate)	0.152	0.14 0.137	0.191	0.16

(Note 1)

The rate of air flow through the orifice is precalculated for all pressure drops across the orifice using the various nozzles for an orifice temperature of 60°F. This figure is then converted to the actual air flow at the orifice temperature by the equation:

$$SR = \frac{(SR60)(T_o = 460)}{520}$$

Where: SR60 = sampling rate through orifice at 60°F
To = average temperature of orifice (°F)

JS/ah/APCHd1

RADIAN II
CYCLONE 3A
BLANK
10/25/88
MASS CONFIGURATION
1A INCLINE CLEANER

Filter No. 001618

City & Station _____

Date Start ____ Mo ____ Day ____ Yr ____ Hr

Date Stop ____ Mo ____ Day ____ Yr ____ Hr

Flow Time
Stop _____ Stop _____
Start _____ Start _____
Ave _____ Total _____

Remarks _____

Wt Sample & Filter 4.4509

Wt Filter 4.4559

Wt Sample -0.005

Filter Conc. _____

Initial weighing by
WCH DATE 10-7-88

Final weighing by
WCH Date 11-7-88

Metals sample taken by _____ Date _____

Microscopic sample taken by _____ Date _____

Sample Custody

1. Collected by _____ Date _____
   Delivered to _____ Date _____
2. Received by _____ Date _____
   Delivered to _____ Date _____
3. Received by _____ Date _____
   Delivered to _____ Date _____
4. Received in laboratory by _____
   Date _____ from _____

PH-2857
LAB 6/86

QC
Bader II
Circone 3A
Run #1
10/25/88
Hills Cotton Gin
Machine Cleaner

Filter No. 001613 001613

City & Station

Date Start Mo Day Yr Hr

Flow Time
Stop Stop

Date Stop Mo Day Yr Hr

Start Start

Ave Total

Remarks

Wt Sample & Filter 4.5766

Wt Filter 4.4564 4.4559 10-7-88 WCH

Wt Sample 0.1142

Filter Conc.

Initial weighing by WCH DATE 10-7-88

Final weighing by WCH Date 11-7-88

Metals sample taken by Date

Microscopic sample taken by Date

Sample Custody

1. Collected by Date
   Delivered to Date
2. Received by Date
   Delivered to Date
3. Received by Date
   Delivered to Date
4. Received in laboratory by
   Date from

PH-2857
LAB 8/86

Rider II
Cyclone 3A
Run #2
10/25/88
Halls Cotton Gin
1A Incline Cleaner

Filter No. C01315

City & Station

Date Start Mo Day Yr Hr

Date Stop Mo Day Yr Hr

Flow Time
Stop Stop
Start Start
Ave Total

Remarks

Wt Sample & Filter 4.5435

Wt Filter 4.4435

Wt Sample ~~WCH 800~~ 0.0100

Filter Conc.

Initial weighing by WCH DATE 10-7-88

Final weighing by WCH Date 11-7-88

Metals sample taken by Date

Microscopic sample taken by Date

Sample Custody

1. Collected by Date
   Delivered to Date
2. Received by Date
   Delivered to Date
3. Received by Date
   Delivered to Date
4. Received in laboratory by
   Date from

PH-2857
LAB 8/88

Rader II
Cyclone 3A
Run #3
10/25/88
Halls Cottonlow
1A Incline Cleaner

Filter No. 001017

City & Station

Date Start ____ Mo ____ Day ____ Yr ____ Hr

Flow Time
Stop ____ Stop ____

Date Stop ____ Mo ____ Day ____ Yr ____ Hr

Start ____ Start ____

Ave ____ Total ____

Remarks

Wt Sample & Filter 4.5266

Wt Filter 4.3775

Wt Sample 0.1491

Filter Conc.

Initial weighing by WCH DATE 10-7-88

Final weighing by WCH Date 11-7-88

Metals sample taken by ____ Date ____

Microscopic sample taken by ____ Date ____

Sample Custody

1. Collected by ____ Date ____
   Delivered to ____ Date ____
2. Received by ____ Date ____
   Delivered to ____ Date ____
3. Received by ____ Date ____
   Delivered to ____ Date ____
4. Received in laboratory by ____
   Date ____ from ____

PH-2857
LAB 8/86

SOURCE SAMPLING PARTICULATE LAB DATA (method 5), Sheet APC 601

Company Hall's TN Cotton Gin Company No. _____

Process Cyclone 3A (1A incline cleaner) Test Date 10-25-88

ACETONE BLANK APC 596

Run No.	_____	_____	_____
Beaker No.	1	_____	_____
Acetone Volume, ml.			
Beaker + Acetone Residue Wt., g	111.8819	_____	_____
Beaker tare weight, g	111.8793	_____	_____
Net weight, g	0.0026	_____	_____
Residue factor (R.f.), g/ml ($\frac{\text{net wt.}}{\text{acetone vol.}}$)	0.00002	_____	_____)

FRONT HALF ACETONE WASH APC 601

Run. No.	1,2,3	_____	_____
Beaker No.	10	_____	_____
Wash vol., ml	205	_____	_____
Gross residue wt.g.	0.0658	_____	_____
Blank wt., g (R.f. x wash vol.)	0.0041	_____	_____
Net wt., g.	0.0617	_____	_____

CYCLONE FIELD DATA FORM

Company Halls Gin Co. Date Oct. 25, 1988

Cyclone I. D. 3B

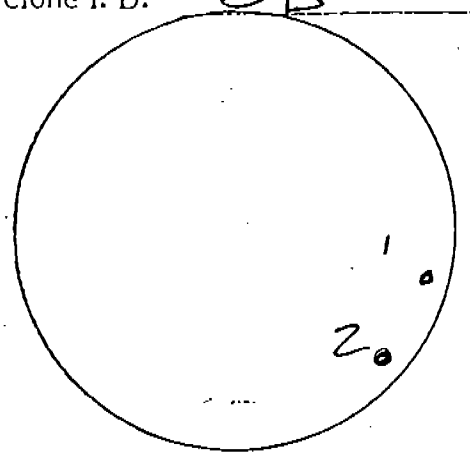

Approximate area of measurable flow and points sampled

point #	ΔP	ΔH
1	1.5	.18
2	1.5	.18

exit dry bulb 134°

exit wet bulb 112°

train # 2

nozzle diameter .937

orifice temp. see below

barometric pressure 29.79

CYCLONE DIMENSIONS: CHECK THE APPROPRIATE EXIT CONFIGURATION

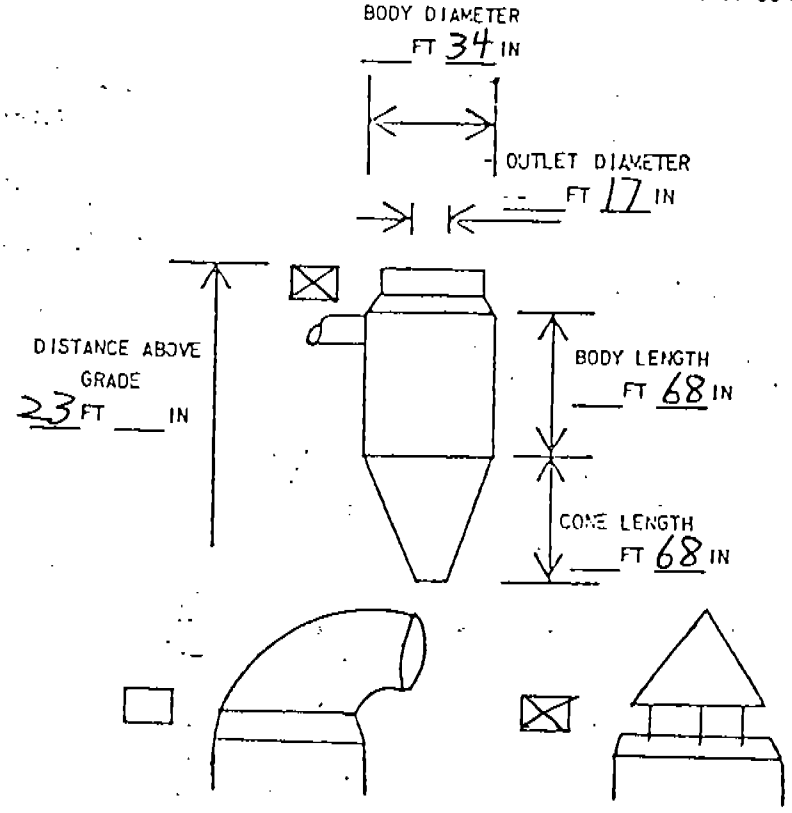

CHECK THE APPROPRIATE INLET CONFIGURATION:

If different from above draw diagram below:

COMMENTS

RUN #	TIME	T_s (°F)	T_o (°F)
1	1155 - 1210	134°	130°
2	1225 - 1240	133°	130°
3	1305 - 1320	134°	130°

CALCULATION OF ACTUAL EMISSIONS

HALLS GIN COMPANY (49-00074)

Source Identification 1A Inclined Cleaner Cyclone 3B

Test Date Oct. 25, 1988

Q = actual airflow in ft^3/min* 2,750

T_d = dry bulb temperature at exhaust point 134°F

T_w = wet bulb temperature at exhaust point 112°F

M = percent moisture in exhaust gases 9.2%

P_{bar} = barometric pressure 29.79

$$Q_{std} = (Q)\ (1 - \frac{M}{100})$$

2,497

Q_{std} in dry standard ft^3/min

* Based on fan data obtained from the designer and builder of the gin. The fan data is at ambient temperature, which is approximately 70° F. Barometric pressures measured during the testing were within one percent of 29.92 in. of Hg. Therefore, the given flows are considered to be at standard conditions.

Company Halls Gin Co. Test Date Oct. 25, 1988

1A Inclined Cleaner

Cyclone I.D. Cyclone 3B

Point No.	1	2	3	4	5	6
Point ΔP	1.5	1.5				
SR60 = sampling rate through orifice at 60°F (see Note 1 on third page following)	21.859	21.859				
T_o = average temperature of orifice (°F)	130	130				
$SR = \frac{(SR60)(T_o + 460)}{520}$ (SR = Sampling rate in ft/min)	24.802	24.802				
T_p = time per sample point (min)	7.5	7.5				

Run #	1	2	3	Ave.
$SV = (T_p)_1 (SR)_1 + (T_p)_2 (SR)_2 + \ldots$ (SV = total sample volume in ft^3)	372.02	372.02	372.02	
T_t = total sampling time (min.)	15	15	15	
$ASV_{ft^3/min} = \frac{SV}{T_t}$ (ASV = average volume sampled)	24.802	24.802	24.802	
T_E = average temperature of exit (°F)	134	133	134	
M_E = molecular weight of exit gases (weighted averages of molecular weights obtained in inlet ducts)	27.99	27.99	27.99	
P_{bar} = barometric pressure	29.79	29.79	29.79	
C_p = 0.99 (pitot tube coeficient)	0.99	0.99	0.99	
$V_E = (85.48)(C_p)\left[\text{AVE}\sqrt{\Delta P_E}\right]\left[\sqrt{\frac{(T_E + 460)}{(M_E)(P_{bar})}}\right]$ (VE = average velocity at sampling points ft/sec)	87.5	87.4	87.5	
d_n = diameter of nozzle (in.)	0.937	0.937	0.937	

Company Halls Gin Co. Test Date Oct. 25, 1988

1A Inclined Cleaner

Cyclone I.D. Cyclone 3B

Run #	1	2	3	Ave.
$A_n = \frac{\pi \times (d_n)^2}{4}$ (An = area of nozzle in.^{2})	0.690	0.690	0.690	
$V_n = \frac{(ASV)(T_E + 460)(2.4)}{(A_n)(T_o + 460)}$ (Vn = average velocity in nozzle ft/sec)	86.9	86.7	86.9	
$P_1 = \frac{(100)(Vn)}{V_E}$ (P1 = percent isokinetic)	99	99	99	
TP = total weight of particulate caught in sampler during a run (g.)	0.1384	0.1437	0.2771	
FW = gain in weight of filter during a run (g.)	0.1172	0.1225	0.2559	
FB = gain in weight of blank filter (to compensate for filter handling) (g.)	-0.0032	-0.0032	-0.0032	
AW = gain in weight from acetone wash of sampler at end of each series of runs (complete test) (g.)	0.0583	0.0583	0.0583	
AB = gain in weight of blank volume of acetone (to compensate for impurities in acetone) (g.)	0.0044	0.0044	0.0044	
N = number of runs in each test over which only a single probe wash occurs	3	3	3	
$TP = FW - FB + \frac{AW - AB}{N}$ (TP = total particulate catch per sample run)	0.1384	0.1437	0.2771	

Company Halls Gin Co. Test Date Oct. 25, 1988

1A Inclined Cleaner

Cyclone I.D. Cyclone 3B

Run #	1	2	3	Ave.
M_s = percent moisture in exit gases (weighted averages of percent moistures obtained in inlet ducts)	9.2	9.2	9.2	
$QS_{std} = \frac{(SV)(17.71)(P_{bar})(1-\frac{Ms}{100})}{(T_o + 460)}$ (QSstd = total volume sampled at standard conditions ft^3)	302.1	302.1	302.1	
C_s (gr/dscf) $= \frac{(15.43)(TP)}{(QS_{std})}$ (Cs = particulate concentration)	0.0071	0.0073	0.0142	0.0095
$PMR_{lb/hr} = (C_s)(TQ_{std})(0.00857)$ TQ_{std} = (total air into cyclone) (PMR = mass emission rate)	0.152	0.16	0.304	0.20

(Note 1)

The rate of air flow through the orifice is precalculated for all pressure drops across the orifice using the various nozzles for an orifice temperature of 60°F. This figure is then converted to the actual air flow at the orifice temperature by the equation:

$$SR = \frac{(SR60)(T_o = 460)}{520}$$

Where: SR60 = sampling rate through orifice at 60°F
To = average temperature of orifice (°F)

JS/ah/APCHd1

PAPER II
(3B) CYCLONE 3D
BLANK
10/25/88
HALLS COTTON GIN
SLICK PIPE GUAD

Filter No. 001604

City & Station

Date Start ____ Mo ____ Day ____ Yr ____ Hr

Date Stop ____ Mo ____ Day ____ Yr ____ Hr

Flow Time
Stop ____ Stop ____
Start ____ Start ____
Ave ____ Total ____

Remarks

Wt Sample & Filter 4.3045

Wt Filter 4.3077

Wt Sample -0.0032

Filter Conc.

Initial weighing by WCH DATE 10-7-88

Final weighing by WCH Date 11-7-88

Metals sample taken by ____ Date ____

Microscopic sample taken by ____ Date ____

Sample Custody

1. Collected by ____ Date ____
   Delivered to ____ Date ____
2. Received by ____ Date ____
   Delivered to ____ Date ____
3. Received by ____ Date ____
   Delivered to ____ Date ____
4. Received in laboratory by ____
   Date ____ from ____

PH-2857
LAB 8/86

RADER II
(3B) CYCLONE 3B
RUN #1
10/25/88
Hayes Cotton Gin
Sulk Pipe Quad

Filter No. 001605

City & Station

Date Start ____ Mo ____ Day ____ Yr ____ Hr

Flow Time
Stop ____ Stop ____

Date Stop ____ Mo ____ Day ____ Yr ____ Hr

Start ____ Start ____

Ave ____ Total ____

Remarks

Wt Sample & Filter 4.4658

Wt Filter 4.3486

Wt Sample 0.1172

Filter Conc.

Initial weighing by WCH DATE 10-7-88

Final weighing by WCH Date 11-7-88

Metals sample taken by ____ Date ____

Microscopic sample taken by ____ Date ____

Sample Custody

1. Collected by ____ Date ____
   Delivered to ____ Date ____
2. Received by ____ Date ____
   Delivered to ____ Date ____
3. Received by ____ Date ____
   Delivered to ____ Date ____
4. Received in laboratory by ____
   Date ____ from ____

PH-2857
LAB 8/86

Rader II
Cyclone 3B
Run #2
10/25/88
Hails Potion Coin

Filter No. 001667

City & Station

Date Start ____ Mo ____ Day ____ Yr ____ Hr

Flow Time
Stop ____ Stop ____
Start ____ Start ____
Ave ____ Total ____

Date Stop ____ Mo ____ Day ____ Yr ____ Hr

Remarks

Wt Sample & Filter 4.4489

Wt Filter 4.3264

Wt Sample 0.0225

Filter Conc.

Initial weighing by WCH DATE 10-7-88

Final weighing by WCH Date 11-7-88

Metals sample taken by ____ Date ____

Microscopic sample taken by ____ Date ____

Sample Custody

1. Collected by ____ Date ____
   Delivered to ____ Date ____
2. Received by ____ Date ____
   Delivered to ____ Date ____
3. Received by ____ Date ____
   Delivered to ____ Date ____
4. Received in laboratory by ____
   Date ____ from ____

PH-2057
LAB 8/86

Kaiser II
Cyclone 3B
Run #3
10/25/88
Hall's Cotton Gin

Filter No. 001609

City & Station

Date Start ___ Mo ___ Day ___ Yr ___ Hr Flow Time

Date Stop ___ Mo ___ Day ___ Yr ___ Hr Stop ___ Stop ___ Start ___ Start ___ Ave ___ Total ___

Remarks

Wt Sample & Filter 4.6179 4.6243 11-9-88 Initial weighing by

Wt Filter 4.3620 WCH DATE 10-7-88

Wt Sample wcH 0.2559

Final weighing by

Filter Conc. WCH Date 11-7-88

Metals sample taken by ___ Date ___

Microscopic sample taken by ___ Date ___

Sample Custody

1. Collected by ___ Date ___
   Delivered to ___ Date ___
2. Received by ___ Date ___
   Delivered to ___ Date ___
3. Received by ___ Date ___
   Delivered to ___ Date ___
4. Received in laboratory by ___
   Date ___ from ___

PII-2857
LAB 8/86

SOURCE SAMPLING PARTICULATE LAB DATA (method 5), Sheet APC 602

Company Hall's TN Cotton Gin | Company No. _____

Process Cyclone 3B | Test Date 10-25-88

ACETONE BLANK APC 596

Run No.			
Beaker No.	1		
Acetone Volume, ml.			
Beaker + Acetone Residue Wt., g	111.8819		
Beaker tare weight, g	111.8793		
Net weight, g	0.0026		
Residue factor (R.f.), g/ml ($\frac{\text{net wt.}}{\text{acetone vol.}}$)	0.00002		)

FRONT HALF ACETONE WASH APC 602

Run. No.	1,2,3		
Beaker No.	11		
Wash vol., ml	210		
Gross residue wt.g.	0.0583		
Blank wt., g (R.f. x wash vol.)	0.0042		
Net wt., g.	0.0541		

CYCLONE FIELD DATA FORM

Company HALLS GIN CO. Date Oct. 26, 1988

Cyclone I. D. 4 A

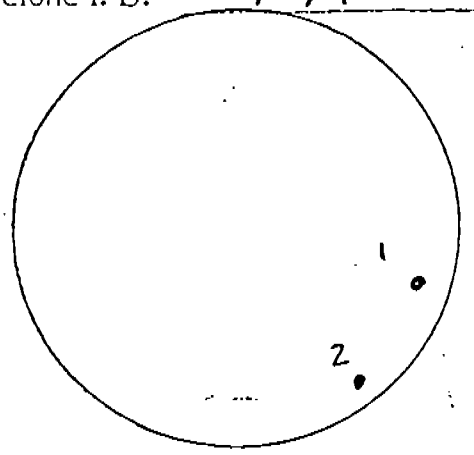

Approximate area of measurable flow and points sampled

point #	ΔP	ΔH
1	1.5	.18
2	1.5	.18

exit dry bulb 125° F

exit wet bulb 102° F

train # 2

nozzle diameter 0.937

orifice temp. see below

barometric pressure 29.84

CYCLONE DIMENSIONS: CHECK THE APPROPRIATE EXIT CONFIGURATION

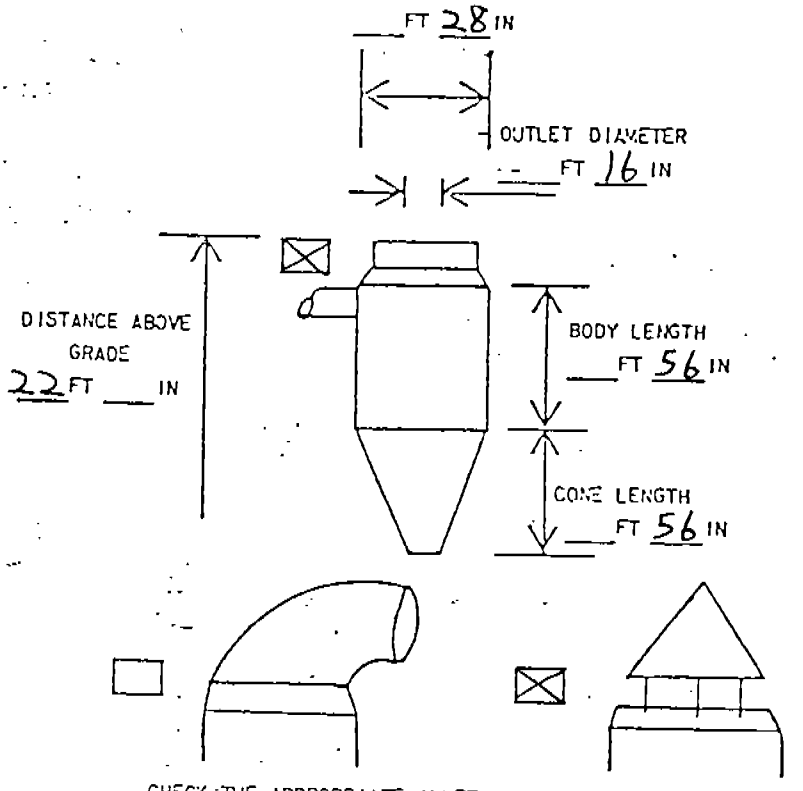

CHECK THE APPROPRIATE INLET CONFIGURATION:

If different from above draw diagram below:

COMMENTS

Run #	TIME	T_s (°F)	T_o (°F)
1	0820 - 0835	125°	127°
2	0845 - 0900	126°	128°
3	0905 - 0920	126°	128°

CALCULATION OF ACTUAL EMISSIONS

HALLS GIN COMPANY (49-00074)

Source Identification 2B Inclined Cleaner Cyclone 4A

Test Date Oct. 26, 1988

Q = actual airflow in ft^3/min* 2,250

T_d = dry bulb temperature at exhaust point 125°F

T_w = wet bulb temperature at exhaust point 102°F

M = percent moisture in exhaust gases 6.9%

P_{bar} = barometric pressure 29.84

$$Q_{std} = (Q)\ (1 - \frac{M}{100})$$

2,095

Q_{std} in dry standard ft^3/min

* Based on fan data obtained from the designer and builder of the gin. The fan data is at ambient temperature, which is approximately 70° F. Barometric pressures measured during the testing were within one percent of 29.92 in. of Hg. Therefore, the given flows are considered to be at standard conditions.

Company Halls Gin Co. Test Date Oct. 26, 1988

2B Inclined Cleaner

Cyclone I.D. Cyclone 4A

Point No.	1	2	3	1/4	2/5	6
	Runs 1			Runs 2&3		
Point ΔP	1.5	1.5		1.5	1.5	
SR60 = sampling rate through orifice at 60°F (see Note 1 on third page following)	22.047	22.047		22.047	22.047	
T_o = average temperature of orifice (°F)	127	127		128	128	
$SR = \frac{(SR60)(T_o + 460)}{520}$ (SR = Sampling rate in ft/min)	24.888	24.888		24.930	24.930	
T_p = time per sample point (min)	7.5	7.5		7.5	7.5	

Run #	1	2	3	Ave.
$SV = (T_p)_1 (SR)_1 + (T_p)_2 (SR)_2 + \ldots$ (SV = total sample volume in ft^3)	373.3	374.0	374.0	
T_t = total sampling time (min.)	15	15	15	
$ASV_{ft^3/min} = \frac{SV}{T_t}$ (ASV = average volume sampled)	24.888	24.930	24.930	
T_E = average temperature of exit (°F)	125	126	126	
M_E = molecular weight of exit gases (weighted averages of molecular weights obtained in inlet ducts)	28.24	28.24	28.24	
P_{bar} = barometric pressure	29.84	29.84	29.84	
C_p = 0.99 (pitot tube coeficient)	0.99	0.99	0.99	
$V_E = (85.48)(C_p)\left[AVE\sqrt{\Delta P_E}\right]\left[\sqrt{\frac{(T_E + 460)}{(M_E)(P_{bar})}}\right]$ (VE = average velocity at sampling points ft/sec)	86.4	86.4	86.4	
d_n = diameter of nozzle (in.)	0.937	0.937	0.937	

Company Halls Gin Co. Test Date Oct. 26, 1988

2B Inclined Cleaner

Cyclone I.D. Cyclone 4A

Run #	1	2	3	Ave.
$A_n = \frac{\pi \times (d_n)^2}{4}$ (An = area of nozzle in.^{2})	0.690	0.690	0.690	
$V_n = \frac{(ASV)(T_E + 460)(2.4)}{(A_n)(T_o + 460)}$ (Vn = average velocity in nozzle ft/sec)	86.3	86.4	86.4	
$P_1 = \frac{(100)(Vn)}{V_E}$ (P1 = percent isokinetic)	100	100	100	
TP = total weight of particulate caught in sampler during a run (g.)	0.1114	0.1324	0.1293	
FW = gain in weight of filter during a run (g.)	0.0951	0.1161	0.1130	
FB = gain in weight of blank filter (to compensate for filter handling) (g.)	-0.0011	-0.0011	-0.0011	
AW = gain in weight from acetone wash of sampler at end of each series of runs (complete test) (g.)	0.0508	0.0508	0.0508	
AB = gain in weight of blank volume of acetone (to compensate for impurities in acetone) (g.)	0.0051	0.0051	0.0051	
N = number of runs in each test over which only a single probe wash occurs	3	3	3	
$TP = FW - FB + \frac{AW - AB}{N}$ (TP = total particulate catch per sample run)	0.1114	0.1324	0.1293	

Company Halls Gin Co. Test Date Oct. 26, 1988

2B Inclined Cleaner

Cyclone I.D. Cyclone 4A

Run #	1	2	3	Ave.
M_S = percent moisture in exit gases (weighted averages of percent moistures obtained in inlet ducts)	6.9	6.9	6.9	
$QS_{std} = \frac{(SV)(17.71)(P_{bar})(1-\frac{Ms}{100})}{(T_o + 460)}$ (QSstd = total volume sampled at standard conditions ft^3)	312.9	314.0	314.0	
C_s (gr/dscf) = $\frac{(15.43)(TP)}{(QS_{std})}$ (Cs = particulate concentration)	0.0055	0.0065	0.0064	0.0061
$PMR_{lb/hr} = (C_s)(TQ_{std})(0.00857)$ TQ_{std} = (total air into cyclone) (PMR = mass emission rate)	0.10	0.12	0.11	0.11

(Note 1)

The rate of air flow through the orifice is precalculated for all pressure drops across the orifice using the various nozzles for an orifice temperature of 60°F. This figure is then converted to the actual air flow at the orifice temperature by the equation:

$$SR = \frac{(SR60)(T_o = 460)}{520}$$

Where: SR60 = sampling rate through orifice at 60°F
To = average temperature of orifice (°F)

JS/ah/APCHd1

RUDER II
2B INCLINE CLEANER
BLANK CYCLONE 4A
10/26/88
HALLS COTTON GIN
CYCLONE 4A

Filter No. 001620

City & Station

Date Start ____ Mo ____ Day ____ Yr ____ Hr

Date Stop ____ Mo ____ Day ____ Yr ____ Hr

Flow Time
Stop ____ Stop ____
Start ____ Start ____
Ave ____ Total ____

Remarks

Wt Sample & Filter 4.4172

Wt Filter 4.4183

Wt Sample -0.0011

Filter Conc.

Initial weighing by WCH DATE 10-7-88

Final weighing by WCH Date 11-7-88

Metals sample taken by ____ Date ____

Microscopic sample taken by ____ Date ____

Sample Custody

1. Collected by ____ Date ____
   Delivered to ____ Date ____
2. Received by ____ Date ____
   Delivered to ____ Date ____
3. Received by ____ Date ____
   Delivered to ____ Date ____
4. Received in laboratory by ____
   Date ____ from ____

PH-2857
LAB 8/88

Rider II
2B Incline Cleaner
(Run #1) Run #1 2 Cycles 4A
10/26/88
Hills Cotton Gin
Cyclone 4A

Filter No. 001621

City & Station

Date Start ____ Mo ____ Day ____ Yr ____ Hr

Flow Time
Stop ____ Stop ____

Date Stop ____ Mo ____ Day ____ Yr ____ Hr

Start ____ Start ____

Ave ____ Total ____

Remarks

Wt Sample & Filter 4.4853

Wt Filter 4.3902

Wt Sample 0.0951

Filter Conc.

Initial weighing by WCH DATE 10-7-88

Final weighing by WCH Date 11-7-88

Metals sample taken by ____ Date ____

Microscopic sample taken by ____ Date ____

Sample Custody

1. Collected by ____ Date ____
   Delivered to ____ Date ____
2. Received by ____ Date ____
   Delivered to ____ Date ____
3. Received by ____ Date ____
   Delivered to ____ Date ____
4. Received in laboratory by ____
   Date ____ from ____

PH-2857
LAB 8/86

QC
Rader II
2B Incline Cleaner
Cyclone 4A
Run #2
10/20/88
Hallis Cotton Gin

Filter No. 001623

City & Station

Date Start ____ Mo ____ Day ____ Yr ____ Hr

Flow Time
Stop ____ Stop ____

Date Stop ____ Mo ____ Day ____ Yr ____ Hr

Start ____ Start ____
Ave ____ Total ____

Remarks

Wt Sample & Filter 4.5161

Initial weighing by

Wt Filter 4.4000 4.4002 LKS 10-7-88 WCH DATE 10-7-88

Wt Sample 0.1161

Final weighing by

Filter Conc. ____ WCH Date 11-7-88

Metals sample taken by ____ Date ____

Microscopic sample taken by ____ Date ____

Sample Custody

1. Collected by ____ Date ____
   Delivered to ____ Date ____
2. Received by ____ Date ____
   Delivered to ____ Date ____
3. Received by ____ Date ____
   Delivered to ____ Date ____
4. Received in laboratory by ____
   Date ____ from ____

PH-2857
LAB 8/88

Radex II
2R Incline Cleaner
Cyclone 4A
Run #3
10/26/88
Hills Corrugation

Filter No. 001621

City & Station

Date Start ____ Mo ____ Day ____ Yr ____ Hr

Flow Time
Stop ____ Stop ____

Date Stop ____ Mo ____ Day ____ Yr ____ Hr

Start ____ Start ____

Ave ____ Total ____

Remarks

Wt Sample & Filter 4.4916

Wt Filter 4.3786

Wt Sample 0.1130

Filter Conc.

Initial weighing by WCH DATE 10-7-88

Final weighing by WCH Date 11-7-88

Metals sample taken by ____ Date ____

Microscopic sample taken by ____ Date ____

Sample Custody

1. Collected by ____ Date ____
   Delivered to ____ Date ____
2. Received by ____ Date ____
   Delivered to ____ Date ____
3. Received by ____ Date ____
   Delivered to ____ Date ____
4. Received in laboratory by ____
   Date ____ from ____

PH-2857
LAB 8/88

SOURCE SAMPLING PARTICULATE LAB DATA (method 5), Sheet APC 606

Company Hall TN Cotton Gin Company No. _____

Process 2B Incline Cleaner, Cyclone 4A Test Date 10-26-88

ACETONE BLANK APC 603

Run No.			
Beaker No.	12	13	
Acetone Volume, ml.	150	130	280 total
Beaker + Acetone Residue Wt., g	110.4916	108.3142	
Beaker tare weight, g	110.4892	108.3128	
Net weight, g	0.0024	0.0014	0.0038 total
Residue factor (R.f.), g/ml ($\frac{\text{net wt.}}{\text{acetone vol.}}$)			0.00001)

FRONT HALF ACETONE WASH APC 606

Run. No.	1, 2 & 3		
Beaker No.	16	17	
Wash vol., ml	200	175	
Gross residue wt.g.	0.0249	0.0259	
Blank wt., g (R.f. x wash vol.)	0.0020	0.0018	
Net wt., g.	0.0229	0.0241	0.0470 total

CYCLONE FIELD DATA FORM

Company HALLS GIN Co. Date Oct. 26, 1988

Cyclone I. D. 4B

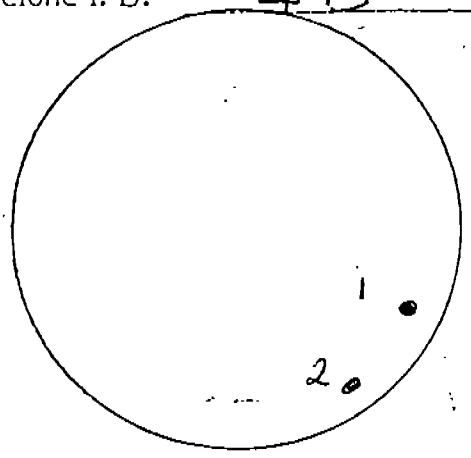

Approximate area of measurable flow and points sampled

point #	ΔP	ΔH
1	1.5	.18
2	1.5	.18

exit dry bulb 125°

exit wet bulb 102°

train # 2

nozzle diameter 0.937

orifice temp. see below

barometric pressure 29.89

CYCLONE DIMENSIONS: CHECK THE APPROPRIATE EXIT CONFIGURATION

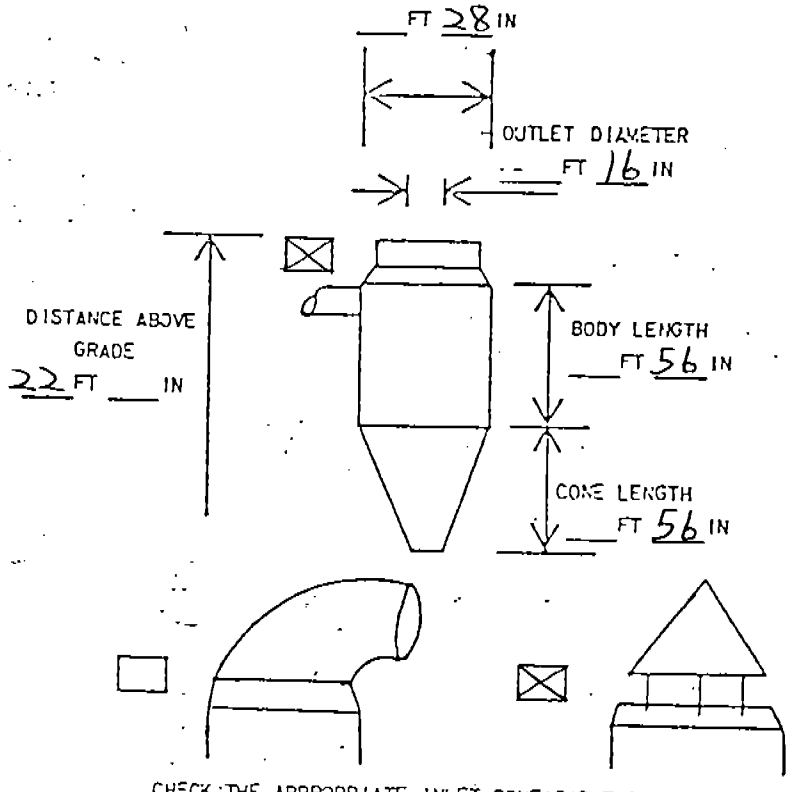

CHECK THE APPROPRIATE INLET CONFIGURATION:

If different from above draw diagram below:

COMMENTS

RUN #	TIME	T_s (°F)	T_a (°F)
1	0930-0945	125°	128°
2	0950-1005	125°	128°
3	1010-1025	125°	128°

CALCULATION OF ACTUAL EMISSIONS

HALLS GIN COMPANY (49-00074)

Source Identification 2B Inclined Cleaner Cyclone 4B

Test Date Oct. 26, 1988

Q = actual airflow in ft^3/min* 2,250

T_d = dry bulb temperature at exhaust point 125°F

T_w = wet bulb temperature at exhaust point 102°F

M = percent moisture in exhaust gases 6.9%

P_{bar} = barometric pressure 29.89

$$Q_{std} = (Q)\left(1 - \frac{M}{100}\right)$$

2,095

Q_{std} in dry standard ft^3/min

* Based on fan data obtained from the designer and builder of the gin. The fan data is at ambient temperature, which is approximately 70° F. Barometric pressures measured during the testing were within one percent of 29.92 in. of Hg. Therefore, the given flows are considered to be at standard conditions.

Company Halls Gin Co. Test Date Oct. 26, 1988

2B Inclined Cleaner

Cyclone I.D. Cyclone 4B

Point No.	1	2	3	4	5	6
Point ΔP	1.5	1.5				
SR60 = sampling rate through orifice at 60°F (see Note 1 on third page following)	22.047	22.047				
T_o = average temperature of orifice (°F)	128	128				
$SR = \frac{(SR60)(T_o + 460)}{520}$ (SR = Sampling rate in ft/min)	24.930	24.930				
T_p = time per sample point (min)	7.5	7.5				

Run #	1	2	3	Ave.
$SV = (T_p)_1 (SR)_1 + (T_p)_2 (SR)_2 + \ldots$ (SV = total sample volume in ft^3)	373.95	373.95	373.95	
T_t = total sampling time (min.)	15	15	15	
$ASV_{ft^3/min} = \frac{SV}{T_t}$ (ASV = average volume sampled)	24.930	24.930	24.930	
T_E = average temperature of exit (°F)	125	125	125	
M_E = molecular weight of exit gases (weighted averages of molecular weights obtained in inlet ducts)	28.24	28.24	28.24	
P_{bar} = barometric pressure	29.89	29.89	29.89	
C_p = 0.99 (pitot tube coeficient)	0.99	0.99	0.99	
$V_E = (85.48)(C_p)\left[\text{AVE}\sqrt{\Delta P_E}\right]\left[\sqrt{\frac{(T_E + 460)}{(M_E)(P_{bar})}}\right]$ (VE = average velocity at sampling points ft/sec)	86.3	86.3	86.3	
d_n = diameter of nozzle (in.)	0.937	0.937	0.937	

Company Halls Gin Co. Test Date Oct. 26, 1988

2B Inclined Cleaner
Cyclone I.D. Cyclone 4B

Run #	1	2	3	Ave.
$A_n = \frac{\pi \times (d_n)^2}{4}$ (An = area of nozzle in.^{2})	0.690	0.690	0.690	
$V_n = \frac{(ASV)(T_E + 460)(2.4)}{(A_n)(T_o + 460)}$ (Vn = average velocity in nozzle ft/sec)	86.3	86.3	86.3	
$P_I = \frac{(100)(Vn)}{V_E}$ (PI = percent isokinetic)	100	100	100	
TP = total weight of particulate caught in sampler during a run (g.)	0.1127	0.1580	0.1409	
FW = gain in weight of filter during a run (g.)	0.0946	0.1399	0.1228	
FB = gain in weight of blank filter (to compensate for filter handling) (g.)	-0.0014	-0.0014	-0.0014	
AW = gain in weight from acetone wash of sampler at end of each series of runs (complete test) (g.)	0.0534	0.0534	0.0534	
AB = gain in weight of blank volume of acetone (to compensate for impurities in acetone) (g.)	0.0033	0.0033	0.0033	
N = number of runs in each test over which only a single probe wash occurs	3	3	3	
$TP = FW - FB + \frac{AW - AB}{N}$ (TP = total particulate catch per sample run)	0.1127	0.1580	0.1409	

Company Hall's Gin Co. Test Date Oct. 26, 1988

2B Inclined Cleaner

Cyclone I.D. Cyclone 4B

Run #	1	2	3	Ave.
M_S = percent moisture in exit gases (weighted averages of percent moistures obtained in inlet ducts)	6.9	6.9	6.9	
$QS_{std} = \frac{(SV)\ (17.71)\ (P_{bar})\ (1-\frac{Ms}{100})}{(T_o + 460)}$ (QSstd = total volume sampled at standard conditions ft^3)	313.4	313.4	313.4	
C_s (gr/dscf) = $\frac{(15.43)\ (TP)}{(QS_{std})}$ (Cs = particulate concentration)	0.0055	0.0078	0.0069	0.0067
$PMR_{lb/hr} = (C_s)\ (TQ_{std})\ (0.00857)$ TQ_{std} = (total air into cyclone) (PMR = mass emission rate)	0.10	0.140	0.124	0.12

(Note 1)

The rate of air flow through the orifice is precalculated for all pressure drops across the orifice using the various nozzles for an orifice temperature of 60°F. This figure is then converted to the actual air flow at the orifice temperature by the equation:

$$SR = \frac{(SR60)\ (T_o = 460)}{520}$$

Where: SR60 = sampling rate through orifice at 60°F
To = average temperature of orifice (°F)

JS/ah/APCHd1

Radex II
2B Incline Cleaner
Cyclone 4B
Bulk
10/26/86
Hall's Cotton Gin

Filter No. 001626

City & Station

Date Start ____ Mo ____ Day ____ Yr ____ Hr

Date Stop ____ Mo ____ Day ____ Yr ____ Hr

Flow Time
Stop ____ Stop ____
Start ____ Start ____
Ave ____ Total ____

Remarks

Wt Sample & Filter 4.3916

Wt Filter 4.3930

Wt Sample -0.0014

Filter Conc.

Initial weighing by WCH DATE 10-7-88

Final weighing by WCH Date 11-7-88

Metals sample taken by ____ Date ____

Microscopic sample taken by ____ Date ____

Sample Custody

1. Collected by ____ Date ____
   Delivered to ____ Date ____
2. Received by ____ Date ____
   Delivered to ____ Date ____
3. Received by ____ Date ____
   Delivered to ____ Date ____
4. Received in laboratory by ____
   Date ____ from ____

PH-2657
LAB 8/88

RADER II
2 IS INCLINE CLIMBER
CYCLONE 4B
RUN #1
10/26/88
HALLS COTTON GIN

Filter No. 001627

City & Station

Date Start ____ Mo ____ Day ____ Yr ____ Hr

Flow Time
Stop ____ Stop ____

Date Stop ____ Mo ____ Day ____ Yr ____ Hr

Start ____ Start ____

Ave ____ Total ____

Remarks

Wt Sample & Filter 4.4740

Wt Filter 4.3794

Wt Sample 0.0946

Filter Conc.

Initial weighing by WCH DATE 10-7-88

Final weighing by WCH Date 11-7-88

Metals sample taken by ____ Date ____

Microscopic sample taken by ____ Date ____

Sample Custody

1. Collected by ____ Date ____
   Delivered to ____ Date ____
2. Received by ____ Date ____
   Delivered to ____ Date ____
3. Received by ____ Date ____
   Delivered to ____ Date ____
4. Received in laboratory by ____
   Date ____ from ____

PH-2857
LAB 8/86

Cadex II
2B Incline Cleaner
Cyclone 4B
Run #2
10/26/88
Hall's Cotton Gin

Filter No. 061639

City & Station

Date Start ____ Mo ____ Day ____ Yr ____ Hr

Date Stop ____ Mo ____ Day ____ Yr ____ Hr

Flow Time
Stop ____ Stop ____
Start ____ Start ____
Ave ____ Total ____

Remarks

Wt Sample & Filter 4.4993

Wt Filter 4.3594

Wt Sample 0.1399

Filter Conc.

Initial weighing by WCH DATE 10-7-88

Final weighing by WCH Date 11-7-88

Metals sample taken by ____ Date ____

Microscopic sample taken by ____ Date ____

Sample Custody

1. Collected by ____ Date ____
   Delivered to ____ Date ____
2. Received by ____ Date ____
   Delivered to ____ Date ____
3. Received by ____ Date ____
   Delivered to ____ Date ____
4. Received in laboratory by ____
   Date ____ from ____

PII-2657
LAB 8/88

RADER II
2B INCLINE CLEANER
CYCLONE 4B
RUN #3
10/26/88
HALLS COMMON BIN

Filter No. 001032

City & Station

Date Start ____ Mo ____ Day ____ Yr ____ Hr

Flow Time
Stop ____ Stop ____

Date Stop ____ Mo ____ Day ____ Yr ____ Hr

Start ____ Start ____

Ave ____ Total ____

Remarks

Wt Sample & Filter 4.5091

Wt Filter 4.3863

Wt Sample 0.1156

Filter Conc.

Initial weighing by WCH DATE 10-7-88

Final weighing by WCH Date 11-7-88

Metals sample taken by ____ Date ____

Microscopic sample taken by ____ Date ____

Sample Custody

1. Collected by ____ Date ____
   Delivered to ____ Date ____
2. Received by ____ Date ____
   Delivered to ____ Date ____
3. Received by ____ Date ____
   Delivered to ____ Date ____
4. Received in laboratory by ____
   Date ____ from ____

PH-2857
LAB 8/88

SOURCE SAMPLING PARTICULATE LAB DATA (method 5), Sheet APC 607

Company Halls, TN Cotton Gin Company No. _____

Process 2B Incline Cleaner, Cyclone 4B Test Date 10-26-88

ACETONE BLANK APC 603

Run No.	_____	_____	_____
Beaker No.	12	13	_____
Acetone Volume, ml.	150	130	280 total
Beaker + Acetone Residue Wt., g	110.4916	108.3142	_____
Beaker tare weight, g	110.4892	108.3128	_____
Net weight, g	0.0024	0.0014	0.0038 total
Residue factor (R.f.), g/ml ($\frac{\text{net wt.}}{\text{acetone vol.}}$)	_____	_____	0.00001)

FRONT HALF ACETONE WASH APC 607

Run. No.	1,2+3	_____	_____
Beaker No.	18	19	_____
Wash vol., ml	140	100	_____
Gross residue wt.g.	0.0299	0.0235	_____
Blank wt., g (R.f. x wash vol.)	0.0014	0.0010	_____
Net wt., g.	0.0285	0.0225	0.0510

CYCLONE FIELD DATA FORM

Company HALLS GIN CO Date Oct. 26, 1988

Cyclone I. D. 5A

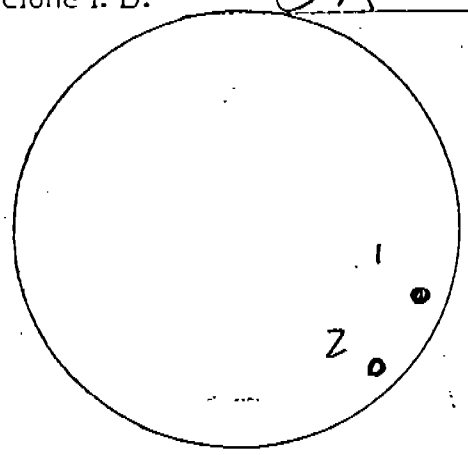

Approximate area of measurable flow and points sampled

point #	ΔP	ΔH
1	1.5	.18
2	1.5	.18

exit dry bulb 117°

exit wet bulb 99°

train # 2

nozzle diameter .937

orifice temp. see below

barometric pressure 29.89

CYCLONE DIMENSIONS: CHECK THE APPROPRIATE EXIT CONFIGURATION

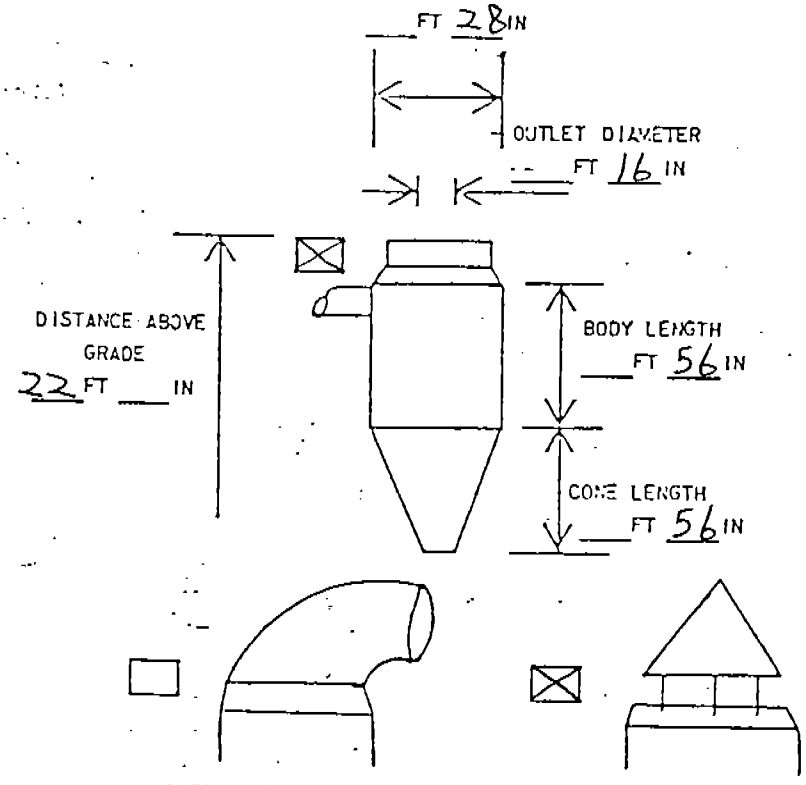

CHECK THE APPROPRIATE INLET CONFIGURATION:

If different from above draw diagram below:

COMMENTS

RUN #	TIME	T_s (°F)	T_o (°F)
1	1040-1055	115°	118°
2	1100-1115	117°	119°
3	1120-1135	117°	119°

CALCULATION OF ACTUAL EMISSIONS

HALLS GIN COMPANY (49-00074)

Source Identification 2A Inclined Cleaner Cyclone 5A

Test Date Oct. 26, 1988

Q = actual airflow in ft^3/min*	2,250
T_d = dry bulb temperature at exhaust point	117°F
T_w = wet bulb temperature at exhaust point	99°F
M = percent moisture in exhaust gases	6.3%
P_{bar} = barometric pressure	29.89

$$Q_{std} = (Q)\ (1 - \frac{M}{100})$$

2,108

Q_{std} in dry standard ft^3/min

* Based on fan data obtained from the designer and builder of the gin. The fan data is at ambient temperature, which is approximately 70° F. Barometric pressures measured during the testing were within one percent of 29.92 in. of Hg. Therefore, the given flows are considered to be at standard conditions.

Company Halls Gin Co. Test Date Oct. 26, 1988

2A Inclined Cleaner

Cyclone I.D. Cyclone 5A

Page 1 of 3

Point No.	1	2	3	1 4	2 5	6
	Run 1			Runs 2&3		
Point ΔP	1.5	1.5		1.5	1.5	
SR60 = sampling rate through orifice at 60°F (see Note 1 on third page following)	22.047	22.047		22.047	22.047	
T_o = average temperature of orifice (°F)	118	118		119	119	
$SR = \frac{(SR60)(T_o + 460)}{520}$ (SR = Sampling rate in ft/min)	24.506	24.506		24.548	24.548	
T_p = time per sample point (min)	7.5	7.5		7.5	7.5	

Run #	1	2	3	Ave.
$SV = (T_p)_1 (SR)_1 + (T_p)_2 (SR)_2 + \ldots$ (SV = total sample volume in ft^3)	367.6	368.2	368.2	
T_t = total sampling time (min.)	15	15	15	
$ASV_{ft^3/min} = \frac{SV}{T_t}$ (ASV = average volume sampled)	24.506	24.548	24.548	
T_E = average temperature of exit (°F)	115	117	117	
M_E = molecular weight of exit gases (weighted averages of molecular weights obtained in inlet ducts)	28.31	28.31	28.31	
P_{bar} = barometric pressure	29.89	29.89	29.89	
C_p = 0.99 (pitot tube coeficient)	0.99	0.99	0.99	
$V_E = (85.48)(C_p)\left[\text{AVE}\sqrt{\Delta P_E}\right]\left[\sqrt{\frac{(T_E + 460)}{(M_E)(P_{bar})}}\right]$ (VE = average velocity at sampling points ft/sec)	85.4	85.6	85.6	
d_n = diameter of nozzle (in.)	0.937	0.937	0.937	

Company Halls Gin Co. Test Date Oct. 26, 1988

2A Inclined Cleaner

Cyclone I.D. Cyclone 5A

Run #	1	2	3	Ave.
$A_n = \frac{\pi \times (d_n)^2}{4}$ (An = area of nozzle in.^{2})	0.690	0.690	0.690	
$V_n = \frac{(ASV)(T_E + 460)(2.4)}{(A_n)(T_o + 460)}$ (Vn = average velocity in nozzle ft/sec)	84.8	85.1	85.1	
$P_1 = \frac{(100)(Vn)}{V_E}$ (P1 = percent isokinetic)	99	99	99	
TP = total weight of particulate caught in sampler during a run (g.)	0.2336	0.2094	0.1293	
FW = gain in weight of filter during a run (g.)	0.2080	0.1838	0.1037	
FB = gain in weight of blank filter (to compensate for filter handling) (g.)	-0.0072	-0.0072	-0.0072	
AW = gain in weight from acetone wash of sampler at end of each series of runs (complete test) (g.)	0.0580	0.0580	0.0580	
AB = gain in weight of blank volume of acetone (to compensate for impurities in acetone) (g.)	0.0028	0.0028	0.0028	
N = number of runs in each test over which only a single probe wash occurs	3	3	3	
$TP = FW - FB + \frac{AW - AB}{N}$ (TP = total particulate catch per sample run)	0.2336	0.2094	0.1293	

Company Halls Gin Co. Test Date Oct. 26, 1988

2A Inclined Cleaner

Cyclone I.D. Cyclone 5A

Run #	1	2	3	Ave.
M_s = percent moisture in exit gases (weighted averages of percent moistures obtained in inlet ducts)	6.3	6.3	6.3	
$QS_{std} = \frac{(SV)(17.71)(P_{bar})(1-\frac{Ms}{100})}{(T_o + 460)}$ (QSstd = total volume sampled at standard conditions ft^3)	315.5	315.4	315.4	
C_s (gr/dscf) $= \frac{(15.43)(TP)}{(QS_{std})}$ (Cs = particulate concentration)	0.0114	0.0102	0.0063	0.0093
$PMR_{lb/hr} = (C_s)(TQ_{std})(0.00857)$ TQ_{std} = (total air into cyclone) (PMR = mass emission rate)	0.21 0.206	0.18 0.194	0.11	0.17

(Note 1)

The rate of air flow through the orifice is precalculated for all pressure drops across the orifice using the various nozzles for an orifice temperature of 60°F. This figure is then converted to the actual air flow at the orifice temperature by the equation:

$$SR = \frac{(SR60)(T_o = 460)}{520}$$

Where: SR60 = sampling rate through orifice at 60°F
To = average temperature of orifice (°F)

JS/ah/APCHd1

RADER II
2A Inclined Cleaner
Cyclone 5A
Blank
10/26/88
Halls Cotton Gin

Filter No. 001634

City & Station

Date Start Mo Day Yr Hr

Date Stop Mo Day Yr Hr

Flow Time
Stop Stop
Start Start
Ave Total

Remarks

Wt Sample & Filter 4.3266

Wt Filter 4.3338

Wt Sample -0.0072

Filter Conc.

Initial weighing by WCH DATE 10-10-88

Final weighing by WCH Date 11-7-88

Metals sample taken by Date

Microscopic sample taken by Date

Sample Custody

1. Collected by Date
   Delivered to Date
2. Received by Date
   Delivered to Date
3. Received by Date
   Delivered to Date
4. Received in laboratory by
   Date from

PH-2657
LAB 8/86

Pader II
JA Incline Cleaner
Cyclone 5A
Run #1
10/26/88
Haus Cotton Gin

Filter No. 001635

City & Station

Date Start ____ Mo ____ Day ____ Yr ____ Hr

Date Stop ____ Mo ____ Day ____ Yr ____ Hr

Flow Time
Stop ____ Stop ____
Start ____ Start ____
Ave ____ Total ____

Remarks

Wt Sample & Filter 4.5767

Wt Filter 4.3687

Wt Sample 0.2080

Filter Conc.

Initial weighing by WCH DATE 10-10-88

Final weighing by WCH Date 11-7-88

Metals sample taken by ____ Date ____

Microscopic sample taken by ____ Date ____

Sample Custody

1. Collected by ____ Date ____
   Delivered to ____ Date ____
2. Received by ____ Date ____
   Delivered to ____ Date ____
3. Received by ____ Date ____
   Delivered to ____ Date ____
4. Received in laboratory by ____
   Date ____ from ____

PH-2857
LAB 8/86

KADER II
2A Inclined Cleaner
Cyclone 5A
Run #2
10/26/88
Halls Cotton Gin

Filter No. 001636

City & Station

Date Start ____ Mo ____ Day ____ Yr ____ Hr

Flow Time
Stop ____ Stop ____

Date Stop ____ Mo ____ Day ____ Yr ____ Hr

Start ____ Start ____

Ave ____ Total ____

Remarks

Wt Sample & Filter 4.5634

Wt Filter 4.3796

Wt Sample 0.1838

Filter Conc.

Initial weighing by WCH DATE 10-10-88

Final weighing by WCH Date 11-7-88

Metals sample taken by ____ Date ____

Microscopic sample taken by ____ Date ____

Sample Custody

1. Collected by ____ Date ____
   Delivered to ____ Date ____
2. Received by ____ Date ____
   Delivered to ____ Date ____
3. Received by ____ Date ____
   Delivered to ____ Date ____
4. Received in laboratory by ____
   Date ____ from ____

PH-2857
LAB 8/86

Paper II
2A Incline Cleaner
Cyclone 5A
Run #3
10/26/88
Halls Cotton G.W

Filter No. C01037

City & Station

Date Start Mo Day Yr Hr

Date Stop Mo Day Yr Hr

Flow Time
Stop Stop
Start Start
Ave Total

Remarks

Wt Sample & Filter 4.4698

Wt Filter 4.3661

Wt Sample 0.1037

Filter Conc.

Initial weighing by WCH DATE 10-10-88

Final weighing by WCH Date 11-7-88

Metals sample taken by Date

Microscopic sample taken by Date

Sample Custody

1. Collected by Date
   Delivered to Date
2. Received by Date
   Delivered to Date
3. Received by Date
   Delivered to Date
4. Received in laboratory by
   Date from

PII-2857
LAB 8/86

SOURCE SAMPLING PARTICULATE LAB DATA (method 5), Sheet APC 608

Company Halls, TN Cotton Gin Company No. _____

Process 2A Incline Cleaner Cyclone 5A Test Date 10-26-88

ACETONE BLANK APC 603

Run No.			
Beaker No.	12	13	
Acetone Volume, ml.	150	130	280 total
Beaker + Acetone Residue Wt., g	110.4916	108.3142	
Beaker tare weight, g	110.4892	108.3128	
Net weight, g	0.0024	0.0014	0.0038 total
Residue factor (R.f.), g/ml ($\frac{\text{net wt.}}{\text{acetone vol.}}$)			0.00001

FRONT HALF ACETONE WASH APC 608

Run. No.	1, 2 & 3		
Beaker No.	20		
Wash vol., ml	270		
Gross residue wt.g.	0.0580		
Blank wt., g (R.f. x wash vol.)	0.0021		
Net wt., g.	0.0559		

CYCLONE FIELD DATA FORM

Company Halls Gin Co. Date Oct. 26, 1988

Cyclone I. D. 5B

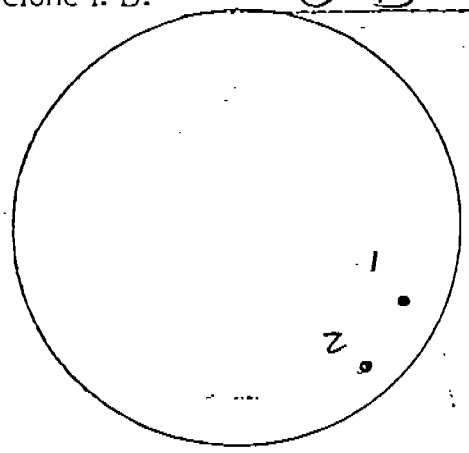

Approximate area of measurable flow and points sampled

point #	ΔP	ΔH
1	1.5	.18
2	1.5	.18

exit dry bulb 116°

exit wet bulb 99°

train # 2

nozzle diameter .937

orifice temp. see below

barometric pressure 29.87

CYCLONE DIMENSIONS: CHECK THE APPROPRIATE EXIT CONFIGURATION

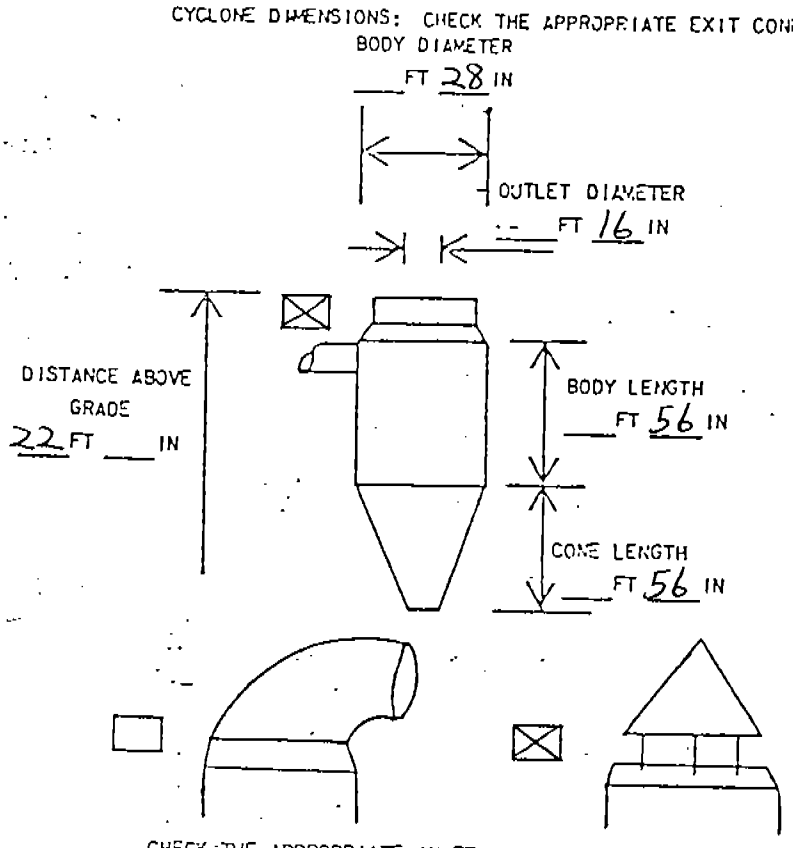

CHECK THE APPROPRIATE INLET CONFIGURATION:

If different from above draw diagram below:

COMMENTS

RUN #	TIME	T_s (°F)	T_o (°F)
1	1220 - 1235	116°	116°
2	1245 - 1300	116°	116°
3	1310 - 1325	116°	116°

CALCULATION OF ACTUAL EMISSIONS

HALLS GIN COMPANY (49-00074)

Source Identification 2A Inclined Cleaner Cyclone 5B

Test Date Oct. 26, 1988

Q = actual airflow in ft^3/min* 2,250

T_d = dry bulb temperature at exhaust point 116°F

T_w = wet bulb temperature at exhaust point 99°F

M = percent moisture in exhaust gases 6.3%

P_{bar} = barometric pressure 29.87

$$Q_{std} = (Q)\ (1 - \frac{M}{100})$$

2,108

Q_{std} in dry standard ft^3/min

* Based on fan data obtained from the designer and builder of the gin. The fan data is at ambient temperature, which is approximately 70^0 F. Barometric pressures measured during the testing were within one percent of 29.92 in. of Hg. Therefore, the given flows are considered to be at standard conditions.

Company Halls Gin Co. Test Date Oct. 26, 1988

2A Inclined Cleaner

Cyclone I.D. Cyclone 5B

Point No.	1	2	3	4	5	6
Point ΔP	1.5	1.5				
SR60 = sampling rate through orifice at 60°F (see Note 1 on third page following)	22.047	22.047				
T_o = average temperature of orifice (°F)	116	116				
$SR = \frac{(SR60)(T_o + 460)}{520}$ (SR = Sampling rate in ft/min)	24.421	24.421				
T_p = time per sample point (min)	7.5	7.5				

Run #	1	2	3	Ave.
$SV = (T_p)_1 (SR)_1 + (T_p)_2 (SR)_2 + \ldots$ (SV = total sample volume in ft^3)	366.32	366.32	366.32	
T_t = total sampling time (min.)	15	15	15	
$ASV_{ft^3/min} = \frac{SV}{T_t}$ (ASV = average volume sampled)	24.421	24.421	24.421	
T_E = average temperature of exit (°F)	116	116	116	
M_E = molecular weight of exit gases (weighted averages of molecular weights obtained in inlet ducts)	28.31	28.31	28.31	
P_{bar} = barometric pressure	29.87	29.87	29.87	
C_p = 0.99 (pitot tube coeficient)	0.99	0.99	0.99	
$V_E = (85.48)(C_p)\left[\text{AVE}\sqrt{\Delta P_E}\right]\left[\sqrt{\frac{(T_E + 460)}{(M_E)(P_{bar})}}\right]$ (VE = average velocity at sampling points ft/sec)	85.5	85.5	85.5	
d_n = diameter of nozzle (in.)	0.937	0.937	0.937	

Company Halls Gin Co. Test Date Oct. 26, 1988

2A Inclined Cleaner

Cyclone I.D. Cyclone 5B

Run #	1	2	3	Ave.
$A_n = \frac{\pi \times (d_n)^2}{4}$ (An = area of nozzle in.^{2})	0.690	0.690	0.690	
$V_n = \frac{(ASV)(T_E + 460)(2.4)}{(A_n)(T_o + 460)}$ (Vn = average velocity in nozzle ft/sec)	84.9	84.9	84.9	
$P_1 = \frac{(100)(Vn)}{V_E}$ (P1 = percent isokinetic)	99.3	99.3	99.3	
TP = total weight of particulate caught in sampler during a run (g.)	0.2232	0.2332	0.2582	
FW = gain in weight of filter during a run (g.)	0.2037	0.2137	0.2387	
FB = gain in weight of blank filter (to compensate for filter handling) (g.)	-0.0045	-0.0045	-0.0045	
AW = gain in weight from acetone wash of sampler at end of each series of runs (complete test) (g.)	0.0493	0.0493	0.0493	
AB = gain in weight of blank volume of acetone (to compensate for impurities in acetone) (g.)	0.0044	0.0044	0.0044	
N = number of runs in each test over which only a single probe wash occurs	3	3	3	
$TP = FW - FB + \frac{AW - AB}{N}$ (TP = total particulate catch per sample run)	0.2232	0.2332	0.2582	

Company Halls Gin Co. Test Date Oct. 26, 1988

2A Inclined Cleaner

Cyclone I.D. Cyclone 5B

Run #	1	2	3	Ave.
M_s = percent moisture in exit gases (weighted averages of percent moistures obtained in inlet ducts)	6.3	6.3	6.3	
$QS_{std} = \frac{(SV)(17.71)(P_{bar})(1-\frac{Ms}{100})}{(T_o + 460)}$ (QSstd = total volume sampled at standard conditions ft^3)	315.2	315.2	315.2	
C_s (gr/dscf) $= \frac{(15.43)(TP)}{(QS_{std})}$ (Cs = particulate concentration)	0.0109	0.0114	0.0126	0.0116
$PMR_{lb/hr} = (C_s)(TQ_{std})(0.00857)$ TQ_{std} = (total air into cyclone) (PMR = mass emission rate)	0.20	0.21	0.23	0.21

(Note 1)

The rate of air flow through the orifice is precalculated for all pressure drops across the orifice using the various nozzles for an orifice temperature of 60°F. This figure is then converted to the actual air flow at the orifice temperature by the equation:

$$SR = \frac{(SR60)(T_o = 460)}{520}$$

Where: SR60 = sampling rate through orifice at 60°F
To = average temperature of orifice (°F)

JS/ah/APCHd1

RADER II
2A Incline Cleaner
Cyclone 5B
Blank
10/26/88
Hauls Cotton Gin

Filter No. 001640

City & Station

Date Start Mo Day Yr Hr

Date Stop Mo Day Yr Hr

Flow Time
Stop Stop
Start Start
Ave Total

Remarks

Wt Sample & Filter WCH ~~4.4000~~ 4.3205

Wt Filter 4.3250

Wt Sample -0.0045

Filter Conc.

Initial weighing by WCH DATE 10-10-88

Final weighing by Date

Metals sample taken by Date

Microscopic sample taken by Date

Sample Custody

1. Collected by Date
   Delivered to Date
2. Received by Date
   Delivered to Date
3. Received by Date
   Delivered to Date
4. Received in laboratory by
   Date from

PH-2857
LAB 8/86

RADER II
2A INCLINE CLEANER
CYCLONE 5B
RUN #1
10/20/88
HALLS COTTON GIN

Filter No. 001641

City & Station

Date Start ____ Mo ____ Day ____ Yr ____ Hr

Flow Time
Stop ____ Stop ____

Date Stop ____ Mo ____ Day ____ Yr ____ Hr

Start ____ Start ____

Ave ____ Total ____

Remarks

Wt Sample & Filter 4.5205

Wt Filter 4.3168

Wt Sample 0.2037

Filter Conc.

Initial weighing by WCH DATE 10-10-88

Final weighing by WCH Date 11-7-88

Metals sample taken by ____ Date ____

Microscopic sample taken by ____ Date ____

Sample Custody

1. Collected by ____ Date ____
   Delivered to ____ Date ____
2. Received by ____ Date ____
   Delivered to ____ Date ____
3. Received by ____ Date ____
   Delivered to ____ Date ____
4. Received in laboratory by ____
   Date ____ from ____

PH-2857
LAB 8/88

Rader II
Jaluque Cleaner
Cyclone 5B
Run #2
10/26/88
Halls Cotton Gin

Filter No. 001343

City & Station

Date Start ____ Mo ____ Day ____ Yr ____ Hr

Flow Time
Stop ____ Stop ____

Date Stop ____ Mo ____ Day ____ Yr ____ Hr

Start ____ Start ____

Ave ____ Total ____

Remarks

Wt Sample & Filter 4.5428

Wt Filter 4.3291 4.3288 10-12-88 LKS

Wt Sample 0.2137

Filter Conc.

Initial weighing by WCH DATE 10-10-88

Final weighing by WCH Date 11-7-88

Metals sample taken by ____ Date ____

Microscopic sample taken by ____ Date ____

Sample Custody

1. Collected by ____ Date ____
   Delivered to ____ Date ____
2. Received by ____ Date ____
   Delivered to ____ Date ____
3. Received by ____ Date ____
   Delivered to ____ Date ____
4. Received in laboratory by ____
   Date ____ from ____

PH-2857
LAB 8/88

Paper II
2A Incline Cleaner
Cyclone 5B
Run #3
10/26/88
Hans Cottenbrink

Filter No. C01645

City & Station

Date Start ____ Mo ____ Day ____ Yr ____ Hr

Flow Time
Stop ____ Stop ____

Date Stop ____ Mo ____ Day ____ Yr ____ Hr

Start ____ Start ____

Ave ____ Total ____

Remarks

Wt Sample & Filter 4.5645

Wt Filter 4.3258

Wt Sample 0.2387

Filter Conc.

Initial weighing by WCH DATE 10-10-88

Final weighing by WCH Date 11-7-88

Metals sample taken by ____ Date ____

Microscopic sample taken by ____ Date ____

Sample Custody

1. Collected by ____ Date ____
   Delivered to ____ Date ____
2. Received by ____ Date ____
   Delivered to ____ Date ____
3. Received by ____ Date ____
   Delivered to ____ Date ____
4. Received in laboratory by ____
   Date ____ from ____

PH-2857
LAB 8/88

SOURCE SAMPLING PARTICULATE LAB DATA (method 5), Sheet APC 609

Company Halls, TN Cotton Gin Company No. _____

Process 2A Incline Cleaner Cyclone 5B Test Date 10-26-88

ACETONE BLANK APC 603

Run No.	_____	_____	_____
Beaker No.	12	13	_____
Acetone Volume, ml.	150	130	280 total
Beaker + Acetone Residue Wt., g	110.4916	108.3142	_____
Beaker tare weight, g	110.4892	108.3128	_____
Net weight, g	0.0024	0.0014	0.0038
Residue factor (R.f.), g/ml ($\frac{\text{net wt.}}{\text{acetone vol.}}$)	_____	_____	0.00001)

FRONT HALF ACETONE WASH APC 609

Run. No.	1+2+3	_____	_____
Beaker No.	21	22	_____
Wash vol., ml	150	175	325 total
Gross residue wt.g.	0.0227	0.0266	_____
Blank wt., g (R.f. x wash vol.)	0.0015	0.0018	_____
Net wt., g.	0.0212	0.0248	0.0460 total

CYCLONE FIELD DATA FORM

Company HALLS GIN CO. Date Oct. 26, 1988

Cyclone I. D. 6A

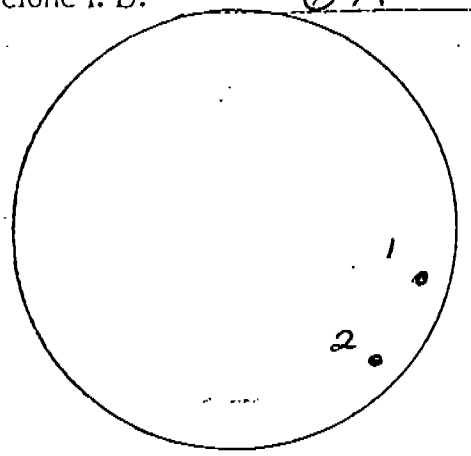

Approximate area of measurable flow and points sampled

point #	ΔP	ΔH
1	1.5	.20
2	1.5	.20

exit dry bulb 89°

exit wet bulb 68°

train # 2

nozzle diameter .937

orifice temp. see below

barometric pressure 29.83

CYCLONE DIMENSIONS: CHECK THE APPROPRIATE EXIT CONFIGURATION

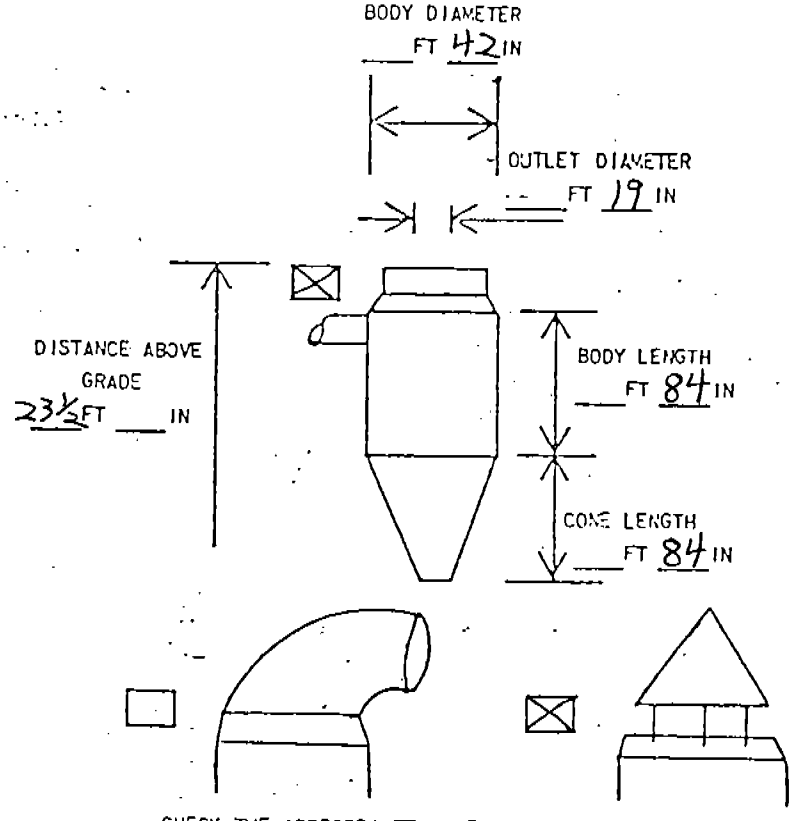

CHECK THE APPROPRIATE INLET CONFIGURATION:

If different from above draw diagram below:

COMMENTS

RUN #	TIME	T_s (°F)	T_o (°F)
1	1350 - 1405	90°	91°
2	1410 - 1425	90°	91°
3	1430 - 1445	89°	91°

CALCULATION OF ACTUAL EMISSIONS

HALLS GIN COMPANY (49-00074)

Source Identification Overflow Cyclone 6A

Test Date Oct. 26, 1988

Q = actual airflow in ft^3/min* 2,000

T_d = dry bulb temperature at exhaust point 89°F

T_w = wet bulb temperature at exhaust point 68°F

M = percent moisture in exhaust gases 2.3%

P_{bar} = barometric pressure 29.83

$$Q_{std} = (Q)\ (1 - \frac{M}{100})$$

1,954

Q_{std} in dry standard ft^3/min

* Based on fan data obtained from the designer and builder of the gin. The fan data is at ambient temperature, which is approximately 70° F. Barometric pressures measured during the testing were within one percent of 29.92 in. of Hg. Therefore, the given flows are considered to be at standard conditions.

Company Halls Gin Co. Test Date Oct. 26, 1988

Cyclone I.D. Overflow Cyclone 6A

Page 1 of 3

Point No.	1	2	3	4	5	6
Point ΔP	1.5	1.5				
SR60 = sampling rate through orifice at 60°F (see Note 1 on third page following)	22.640	22.640				
T_o = average temperature of orifice (°F)	91	91				
$SR = \frac{(SR60)(T_o + 460)}{520}$ (SR = Sampling rate in ft/min)	23.990	23.990				
T_p = time per sample point (min)	7.5	7.5				

Run #	1	2	3	Ave.
$SV = (T_p)_1 (SR)_1 + (T_p)_2 (SR)_2 + \ldots$ (SV = total sample volume in ft^3)	359.84	359.84	359.84	
T_t = total sampling time (min.)	15	15	15	
$ASV_{ft^3/min} = \frac{SV}{T_t}$ (ASV = average volume sampled)	23.990	23.990	23.990	
T_E = average temperature of exit (°F)	90	90	89	
M_E = molecular weight of exit gases (weighted averages of molecular weights obtained in inlet ducts)	28.75	28.75	28.75	
P_{bar} = barometric pressure	29.83	29.83	29.83	
C_p = 0.99 (pitot tube coeficient)	0.99	0.99	0.99	
$V_E = (85.48)(C_p)\left[AVE\sqrt{\Delta P_E}\right]\left[\sqrt{\frac{(T_E + 460)}{(M_E)(P_{bar})}}\right]$ (VE = average velocity at sampling points ft/sec)	83.0	83.0	82.9	
d_n = diameter of nozzle (in.)	0.937	0.937	0.937	

Company Halls Gin Co. Test Date Oct. 26, 1988

Cyclone I.D. Overflow Cyclone 6A

Run #	1	2	3	Ave.
$A_n = \frac{\pi \times (d_n)^2}{4}$ (An = area of nozzle in.^{2})	0.690	0.690	0.690	
$V_n = \frac{(ASV)(T_E + 460)(2.4)}{(A_n)(T_o + 460)}$ (Vn = average velocity in nozzle ft/sec)	83.3	83.3	83.1	
$P_I = \frac{(100)(Vn)}{V_E}$ (PI = percent isokinetic)	100	100	100	
TP = total weight of particulate caught in sampler during a run (g.)	0.2333	0.2561	0.1989	
FW = gain in weight of filter during a run (g.)	0.2052	0.2280	0.1708	
FB = gain in weight of blank filter (to compensate for filter handling) (g.)	-0.0095	-0.0095	-0.0095	
AW = gain in weight from acetone wash of sampler at end of each series of runs (complete test) (g.)	0.0589	0.0589	0.0589	
AB = gain in weight of blank volume of acetone (to compensate for impurities in acetone) (g.)	0.0031	0.0031	0.0031	
N = number of runs in each test over which only a single probe wash occurs	3	3	3	
$TP = FW - FB + \frac{AW - AB}{N}$ (TP = total particulate catch per sample run)	0.2333	0.2561	0.1989	

Company Halls Gin Co. Test Date Oct. 26, 1988

Cyclone I.D. Overflow Cyclone 6A

Run #	1	2	3	Ave.
M_s = percent moisture in exit gases (weighted averages of percent moistures obtained in inlet ducts)	2.3	2.3	2.3	
$QS_{std} = \frac{(SV)(17.71)(P_{bar})(1-\frac{Ms}{-100})}{(T_o + 460)}$ (QSstd = total volume sampled at standard conditions ft^3)	337.1	337.1	337.1	
C_s (gr/dscf) $= \frac{(15.43)(TP)}{(QS_{std})}$ (Cs = particulate concentration)	0.0107	0.0117	0.0091	0.0105
$PMR_{lb/hr} = (C_s)(TQ_{std})(0.00857)$ TQ_{std} = (total air into cyclone) (PMR = mass emission rate)	0.18	0.20	0.152	0.18

(Note 1)

The rate of air flow through the orifice is precalculated for all pressure drops across the orifice using the various nozzles for an orifice temperature of 60°F. This figure is then converted to the actual air flow at the orifice temperature by the equation:

$$SR = \frac{(SR60)(T_o = 460)}{520}$$

Where: SR60 = sampling rate through orifice at 60°F
To = average temperature of orifice (°F)

JS/ah/APCHd1

FIBER II
OVERFLOW
CYCLONE ON
BLANK
10/26/88
HALLS CANYON

Filter No. 001649

City & Station

Date Start ___ Mo ___ Day ___ Yr ___ Hr

Date Stop ___ Mo ___ Day ___ Yr ___ Hr

Flow Time
Stop ___ Stop ___
Start ___ Start ___
Ave ___ Total ___

Remarks

Wt Sample & Filter 4.3583 4.3600 .0017 11-9-88

Wt Filter 4.3678

Wt Sample 0.0095

Filter Conc.

Initial weighing by
WCH DATE 10-10-88

Final weighing by
WCH Date 11-7-88

Metals sample taken by ___ Date ___

Microscopic sample taken by ___ Date ___

Sample Custody

1. Collected by ___ Date ___
   Delivered to ___ Date ___
2. Received by ___ Date ___
   Delivered to ___ Date ___
3. Received by ___ Date ___
   Delivered to ___ Date ___
4. Received in laboratory by ___
   Date ___ from ___

PH-2857
LAB 8/88

RADER II
OVERFLOW
CYCLONE 6A
RUN #1
10/26/88
[illegible] COTTONGIN

Filter No. 001648

City & Station

Date Start ____ Mo ____ Day ____ Yr ____ Hr

Flow Time
Stop ____ Stop ____

Date Stop ____ Mo ____ Day ____ Yr ____ Hr

Start ____ Start ____

Ave ____ Total ____

Remarks

Wt Sample & Filter 4.5356

Wt Filter 4.3304

Wt Sample 0.2052

Filter Conc.

Initial weighing by WCH DATE 10-10-88

Final weighing by WCH Date 11-7-88

Metals sample taken by ____ Date ____

Microscopic sample taken by ____ Date ____

Sample Custody

1. Collected by ____ Date ____
   Delivered to ____ Date ____
2. Received by ____ Date ____
   Delivered to ____ Date ____
3. Received by ____ Date ____
   Delivered to ____ Date ____
4. Received in laboratory by ____
   Date ____ from ____

PH-2657
LAB 8/88

Rader II
Overflow
Cyclone 6A
Run #2
10/20/88
Hills Cotton Gin

Filter No. 001052

City & Station

Date Start ____ Mo ____ Day ____ Yr ____ Hr

Flow Time
Stop ____ Stop ____

Date Stop ____ Mo ____ Day ____ Yr ____ Hr

Start ____ Start ____

Ave ____ Total ____

Remarks

Wt Sample & Filter 4.5666

Wt Filter 4.3386

Wt Sample 0.228

Filter Conc.

Initial weighing by WCH DATE 10-10-88

Final weighing by WCH Date 11-7-88

Metals sample taken by ____ Date ____

Microscopic sample taken by ____ Date ____

Sample Custody

1. Collected by ____ Date ____
   Delivered to ____ Date ____
2. Received by ____ Date ____
   Delivered to ____ Date ____
3. Received by ____ Date ____
   Delivered to ____ Date ____
4. Received in laboratory by ____
   Date ____ from ____

PH-2857
LAB 8/86

Rader II
Overflow
Cyclone 6d
Kiln #3
10/20/88
Hills Cotton Gin

Filter No. 001C55

City & Station

Date Start Mo Day Yr Hr

Date Stop Mo Day Yr Hr

Flow Time
Stop Stop
Start Start
Ave Total

Remarks

Wt Sample & Filter 4.5000

Wt Filter 4.3292

Wt Sample 0.1708

Filter Conc.

Initial weighing by WCH DATE 10-10-88

Final weighing by WCH Date 11-7-88

Metals sample taken by Date

Microscopic sample taken by Date

Sample Custody

1. Collected by Date
   Delivered to Date
2. Received by Date
   Delivered to Date
3. Received by Date
   Delivered to Date
4. Received in laboratory by
   Date from

PH-2857
LAB 8/88

SOURCE SAMPLING PARTICULATE LAB DATA (method 5), Sheet APC 612

Company Halls, TN Cotton Gin Company No. _____

Process Overflow Cyclone 6A Test Date 10-26-88

ACETONE BLANK APC 603

Run No.	_____	_____	_____
Beaker No.	12	13	
Acetone Volume, ml.	150	130	280 total
Beaker + Acetone Residue Wt., g	110.4916	108.3142	_____
Beaker tare weight, g	110.4892	108.3128	_____
Net weight, g	0.0024	0.0014	0.0038 total
Residue factor (R.f.), g/ml ($\frac{\text{net wt.}}{\text{acetone vol.}}$)	_____	_____	0.00001)

FRONT HALF ACETONE WASH APC 612

Run. No.	1,2 & 3	_____	_____
Beaker No.	26	27	_____
Wash vol., ml	125	100	225 total
Gross residue wt.g.	0.0331	0.0258	_____
Blank wt., g (R.f. x wash vol.)	0.0012	0.0010	_____
Net wt., g.	0.0315	0.0248	0.0563 total

CYCLONE FIELD DATA FORM

Company HALLS GIN CO. Date Oct. 26, 1988

Cyclone I. D. 6 B

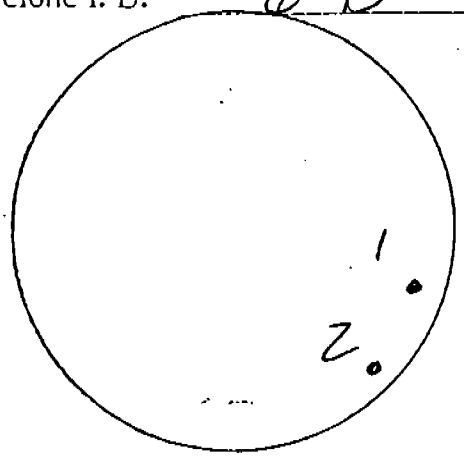

Approximate area of measurable flow and points sampled

point #	ΔP	ΔH
1	1.5	.20
2	1.5	.20

exit dry bulb 89°

exit wet bulb 68°

train # 2

nozzle diameter .937

orifice temp. see below

barometric pressure 29.82

CYCLONE DIMENSIONS: CHECK THE APPROPRIATE EXIT CONFIGURATION:

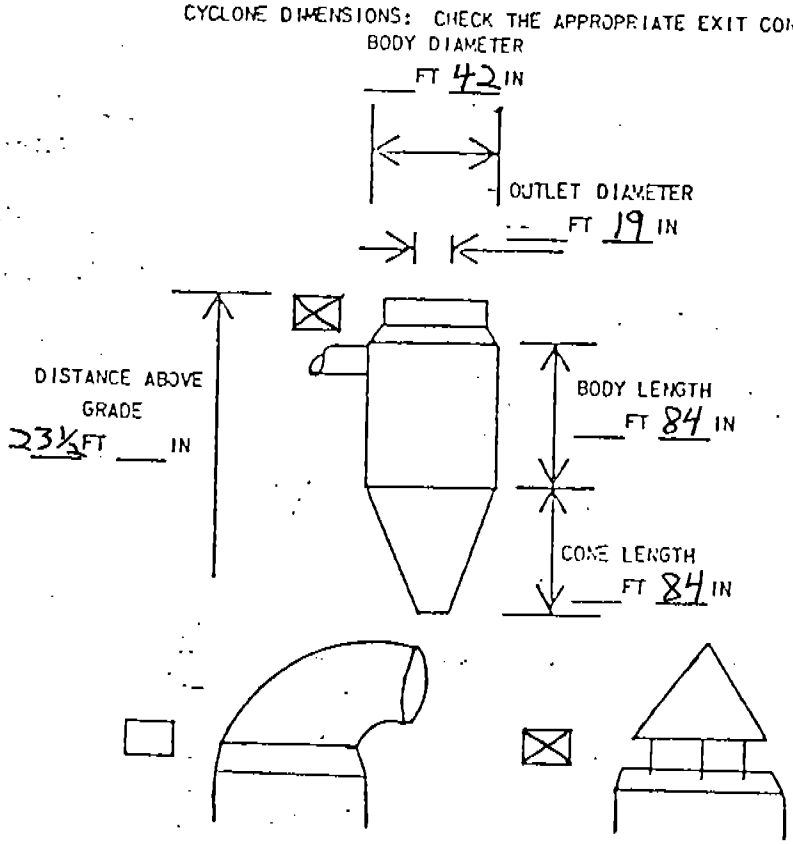

CHECK THE APPROPRIATE INLET CONFIGURATION:

If different from above draw diagram below:

COMMENTS

RUN #	TIME	T_s (°F)	T_o (°F)
1	1505 - 1520	88°	89°
2	1525 - 1540	89°	89°
3	1545 - 1600	89°	89°

CALCULATION OF ACTUAL EMISSIONS

HALLS GIN COMPANY (49-00074)

Source Identification Overflow Cyclone 6B

Test Date Oct. 26, 1988

Q = actual airflow in ft^3/min*	2,000
T_d = dry bulb temperature at exhaust point	89°F
T_w = wet bulb temperature at exhaust point	68°F
M = percent moisture in exhaust gases	2.3%
P_{bar} = barometric pressure	29.82

$$Q_{std} = (Q)\left(1 - \frac{M}{100}\right)$$

1,954

Q_{std} in dry standard ft^3/min

* Based on fan data obtained from the designer and builder of the gin. The fan data is at ambient temperature, which is approximately 70° F. Barometric pressures measured during the testing were within one percent of 29.92 in. of Hg. Therefore, the given flows are considered to be at standard conditions.

Company Halls Gin Co. Test Date Oct. 26, 1988

Cyclone I.D. Overflow Cyclone 6B

Point No.	1	2	3	4	5	6
Point ΔP	1.5	1.5				
SR60 = sampling rate through orifice at 60°F (see Note 1 on third page following)	22.640	22.640				
T_o = average temperature of orifice (°F)	89	89				
$SR = \frac{(SR60)(T_o + 460)}{520}$ (SR = Sampling rate in ft/min)	23.903	23.903				
T_p = time per sample point (min)	7.5	7.5				

Run #	1	2	3	Ave.
$SV = (T_p)_1 (SR)_1 + (T_p)_2 (SR)_2 + \ldots$ (SV = total sample volume in ft^3)	358.54	358.54	358.54	
T_t = total sampling time (min.)	15	15	15	
$ASV_{ft^3/min} = \frac{SV}{T_t}$ (ASV = average volume sampled)	23.903	23.903	23.903	
T_E = average temperature of exit (°F)	88	89	89	
M_E = molecular weight of exit gases (weighted averages of molecular weights obtained in inlet ducts)	28.75	28.75	28.75	
P_{bar} = barometric pressure	29.82	29.82	29.82	
C_p = 0.99 (pitot tube coeficient)	0.99	0.99	0.99	
$V_E = (85.48)(C_p)\left[AVE\sqrt{\Delta P_E}\right]\left[\sqrt{\frac{(T_E + 460)}{(M_E)(P_{bar})}}\right]$ (VE = average velocity at sampling points ft/sec)	82.9	82.9	82.9	
d_n = diameter of nozzle (in.)	0.937	0.937	0.937	

Company Halls Gin Co. Test Date Oct. 26, 1988

Cyclone I.D. Overflow Cyclone 6B

Run #	1	2	3	Ave.
$A_n = \frac{\pi \times (d_n)^2}{4}$ (An = area of nozzle in.^{2})	0.690	0.690	0.690	
$V_n = \frac{(ASV)(T_E + 460)(2.4)}{(A_n)(T_o + 460)}$ (Vn = average velocity in nozzle ft/sec)	83.0	83.1	83.1	
$P_1 = \frac{(100)(Vn)}{V_E}$ (P1 = percent isokinetic)	100	100	100	
TP = total weight of particulate caught in sampler during a run (g.)	0.3426	0.4192	0.4549	
FW = gain in weight of filter during a run (g.)	0.3150	0.3916	0.4273	
FB = gain in weight of blank filter (to compensate for filter handling) (g.)	-0.0099	-0.0099	-0.0099	
AW = gain in weight from acetone wash of sampler at end of each series of runs (complete test) (g.)	0.0567	0.0567	0.0567	
AB = gain in weight of blank volume of acetone (to compensate for impurities in acetone) (g.)	0.0037	0.0037	0.0037	
N = number of runs in each test over which only a single probe wash occurs	3	3	3	
$TP = FW - FB + \frac{AW - AB}{N}$ (TP = total particulate catch per sample run)	0.3426	0.4192	0.4549	

Company Halls Gin Co. Test Date Oct. 26, 1988

Cyclone I.D. Overflow Cyclone 6B

Run #	1	2	3	Ave.
M_s = percent moisture in exit gases (weighted averages of percent moistures obtained in inlet ducts)	2.3	2.3	2.3	
$QS_{std} = \frac{(SV)(17.71)(P_{bar})(1-\frac{Ms}{-100})}{(T_o + 460)}$ (QSstd = total volume sampled at standard conditions ft^3)	337.0	337.0	337.0	
C_s (gr/dscf) $= \frac{(15.43)(TP)}{(QS_{std})}$ (Cs = particulate concentration)	0.0157	0.0192	0.0208	0.0186
$PMR_{lb/hr} = (C_s)(TQ_{std})(0.00857)$ TQ_{std} = (total air into cyclone) (PMR = mass emission rate)	0.263	0.322	0.35 0.348	0.31

(Note 1)

The rate of air flow through the orifice is precalculated for all pressure drops across the orifice using the various nozzles for an orifice temperature of 60°F. This figure is then converted to the actual air flow at the orifice temperature by the equation:

$$SR = \frac{(SR60)(T_o = 460)}{520}$$

Where: SR60 = sampling rate through orifice at 60°F
To = average temperature of orifice (°F)

JS/ah/APCHd1

PADER II
OVERFLOW
CYCLONE 6B
BLANK
10/26/88
Hills Cottonbird

Filter No. 001656

City & Station

Date Start ____ Mo ____ Day ____ Yr ____ Hr

Flow Time
Stop ____ Stop ____

Date Stop ____ Mo ____ Day ____ Yr ____ Hr

Start ____ Start ____

Ave ____ Total ____

Remarks

Wt Sample & Filter 4.3595

Wt Filter 4.3694

Wt Sample -0.0099

Filter Conc.

Initial weighing by WCH DATE 10-10-88

Final weighing by WCH Date 11-7-88

Metals sample taken by ____ Date ____

Microscopic sample taken by ____ Date ____

Sample Custody

1. Collected by ____ Date ____
   Delivered to ____ Date ____
2. Received by ____ Date ____
   Delivered to ____ Date ____
3. Received by ____ Date ____
   Delivered to ____ Date ____
4. Received in laboratory by ____
   Date ____ from ____

PH-2857
LAB 8/88

Radee II
Overflow
Cyclone 6B
Run #1
10/5-6/88
Hills Comos Grid

Filter No. 031657

City & Station

Date Start ____ Mo ____ Day ____ Yr ____ Hr

Flow Time
Stop ____ Stop ____

Date Stop ____ Mo ____ Day ____ Yr ____ Hr

Start ____ Start ____

Ave ____ Total ____

Remarks

Wt Sample & Filter 4.6622

Wt Filter 4.3472

Wt Sample 0.315

Filter Conc.

Initial weighing by
WCH DATE 10-10-88

Final weighing by
WCH Date 11-7-88

Metals sample taken by ____ Date ____

Microscopic sample taken by ____ Date ____

Sample Custody

1. Collected by ____ Date ____

   Delivered to ____ Date ____

2. Received by ____ Date ____

   Delivered to ____ Date ____

3. Received by ____ Date ____

   Delivered to ____ Date ____

4. Received in laboratory by ____

   Date ____ from ____

PII-2857
LAB 8/86

Rider II
Overflow
Cyclone 6B
Run #2
10/26/88
Hays Cotton Gin

Filter No. C01650

City & Station

Date Start ___ Mo ___ Day ___ Yr ___ Hr

Date Stop ___ Mo ___ Day ___ Yr ___ Hr

Flow Time
Stop ___ Stop ___
Start ___ Start ___
Ave ___ Total ___

Remarks

Wt Sample & Filter 4.7146 4.7188 11-7 11-8-88

Wt Filter 4.3230

Wt Sample 0.3916

Filter Conc.

Initial weighing by
WCH DATE 10-10-88

Final weighing by
WCH Date 11-8-88

Metals sample taken by ___ Date ___

Microscopic sample taken by ___ Date ___

Sample Custody

1. Collected by ___ Date ___
   Delivered to ___ Date ___
2. Received by ___ Date ___
   Delivered to ___ Date ___
3. Received by ___ Date ___
   Delivered to ___ Date ___
4. Received in laboratory by ___
   Date ___ from ___

PH-2857
LAB 8/86

KADER II
OVERFLOW
CYCLONE 6B
RUN #3
10/26/88
HALLS COTTON GIN

Filter No. 001661

City & Station

Date Start ____ Mo ____ Day ____ Yr ____ Hr

Date Stop ____ Mo ____ Day ____ Yr ____ Hr

Flow Time
Stop ____ Stop ____
Start ____ Start ____
Ave ____ Total ____

Remarks

Wt Sample & Filter 4.7350

Wt Filter 4.3077

Wt Sample 0.4273

Filter Conc.

Initial weighing by
WCH DATE 10-10-88

Final weighing by
WCH Date 11-8-88

Metals sample taken by ____ Date ____

Microscopic sample taken by ____ Date ____

Sample Custody

1. Collected by ____ Date ____
   Delivered to ____ Date ____
2. Received by ____ Date ____
   Delivered to ____ Date ____
3. Received by ____ Date ____
   Delivered to ____ Date ____
4. Received in laboratory by ____
   Date ____ from ____

PH-2057
LAB 8/88

SOURCE SAMPLING PARTICULATE LAB DATA (method 5), Sheet APC 613

Company Halls, TN Cotton Gin Company No. _____

Process Overflow Cyclone 613 Test Date 10-26-88

ACETONE BLANK APC 603

Run No.	_____	_____	_____
Beaker No.	12	13	
Acetone Volume, ml.	150	130	280 ml total
Beaker + Acetone Residue Wt., g	110.4916	108.3142	_____
Beaker tare weight, g	110.4892	108.3128	_____
Net weight, g	0.0024	0.0014	0.0038 total
Residue factor (R.f.), g/ml ($\frac{\text{net wt.}}{\text{acetone vol.}}$)	_____	_____	0.00001)

FRONT HALF ACETONE WASH APC 613

Run. No.	1,2+3	_____	_____
Beaker No.	28	29	_____
Wash vol., ml	150	125	275 total
Gross residue wt.g.	0.0294	00273	_____
Blank wt., g (R.f. x wash vol.)	0.0015	0.0012	_____
Net wt., g.	0.0279	0.0261	0.0540 total

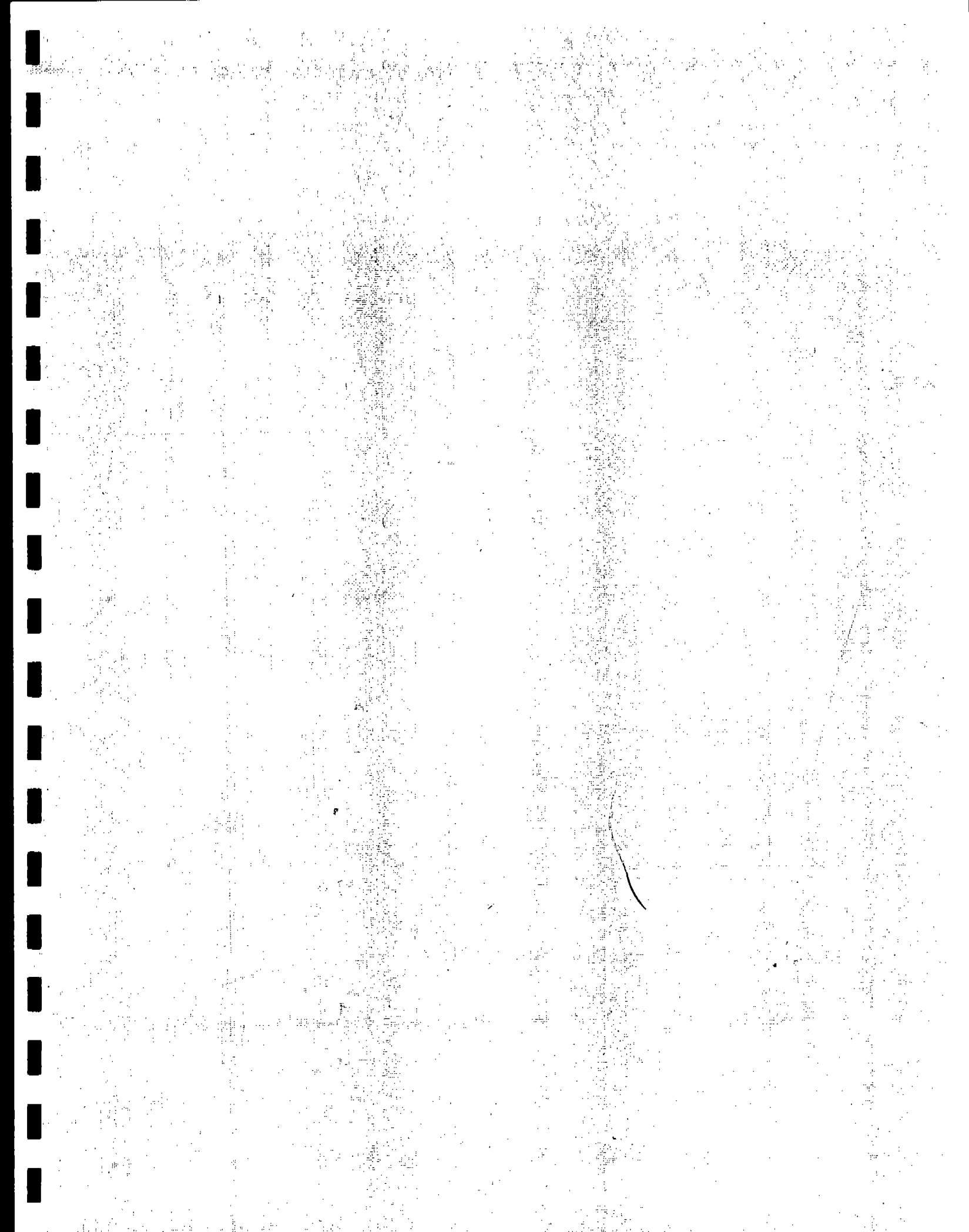

CYCLONE FIELD DATA FORM

Company HALLS GIN CO. Date Oct. 26, 1988

Cyclone I. D. 7A

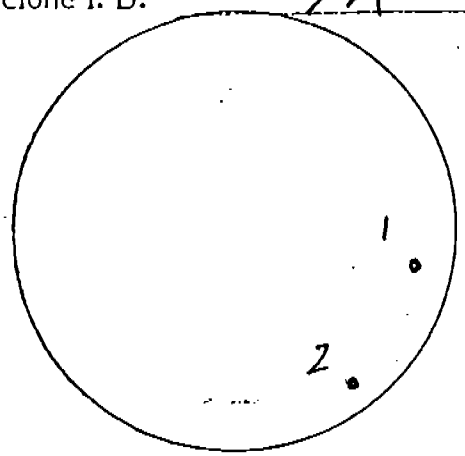

Approximate area of measurable flow and points sampled

point #	ΔP	ΔH
1	1.5	.20
2	1.5	.20

CYCLONE DIMENSIONS: CHECK THE APPROPRIATE EXIT CONFIGURATION:

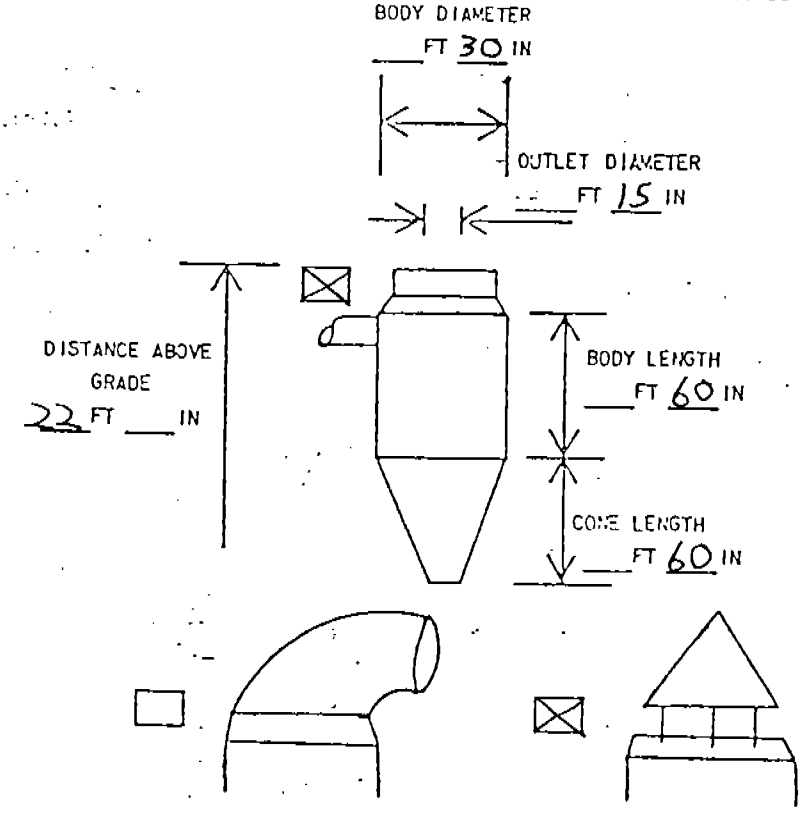

CHECK THE APPROPRIATE INLET CONFIGURATION:

If different from above draw diagram below:

exit dry bulb 78°

exit wet bulb 60°

train # 2

nozzle diameter .937

orifice temp. see below

barometric pressure 29.81

COMMENTS

RUN #	TIME	T_s (°F)	T_a (°F)
1	1620 - 1635	78°	79°
2	1640 - 1655	78°	79°
3	1705 - 1720	78°	79°

CALCULATION OF ACTUAL EMISSIONS

HALLS GIN COMPANY (49-00074)

Source Identification Mote Trash Cyclone 7A

Test Date Oct. 26, 1988

Q = actual airflow in ft^3/min* 1,250

T_d = dry bulb temperature at exhaust point 78°F

T_w = wet bulb temperature at exhaust point 60°F

M = percent moisture in exhaust gases 1.8%

P_{bar} = barometric pressure 29.81

$$Q_{std} = (Q)\ (1 - \frac{M}{100})$$

1,228

Q_{std} in dry standard ft^3/min

* Based on fan data obtained from the designer and builder of the gin. The fan data is at ambient temperature, which is approximately 70° F. Barometric pressures measured during the testing were within one percent of 29.92 in. of Hg. Therefore, the given flows are considered to be at standard conditions.

Company Halls Gin Co. Test Date Oct. 26, 1988

Cyclone I.D. Mote Trash Cyclone 7A

Page 1 of 3

Point No.	1	2	3	4	5	6
Point ΔP	1.5	1.5				
SR60 = sampling rate through orifice at 60°F (see Note 1 on third page following)	22.849	22.849				
T_o = average temperature of orifice (°F)	79	79				
$SR = \frac{(SR60)(T_o + 460)}{520}$ (SR = Sampling rate in ft/min)	23.684	23.684				
T_p = time per sample point (min)	7.5	7.5				

Run #	1	2	3	Ave.
$SV = (T_p)_1 (SR)_1 + (T_p)_2 (SR)_2 + \ldots$ (SV = total sample volume in ft^3)	355.26	355.26	355.26	
T_t = total sampling time (min.)	15	15	15	
$ASV_{ft^3/min} = \frac{SV}{T_t}$ (ASV = average volume sampled)	23.684	23.684	23.684	
T_E = average temperature of exit (°F)	78	78	78	
M_E = molecular weight of exit gases (weighted averages of molecular weights obtained in inlet ducts)	28.80	28.80	28.80	
P_{bar} = barometric pressure	29.81	29.81	29.81	
C_p = 0.99 (pitot tube coeficient)	0.99	0.99	0.99	
$V_E = (85.48)(C_p)\left[AVE\sqrt{\Delta P_E}\right]\left[\sqrt{\frac{(T_E + 460)}{(M_E)(P_{bar})}}\right]$ (VE = average velocity at sampling points ft/sec)	82.0	82.0	82.0	
d_n = diameter of nozzle (in.)	0.937	0.937	0.937	

Company Halls Gin Co. Test Date Oct. 26, 1988

Cyclone I.D. MoteCyclone 7A

Run #	1	2	3	Ave.
$A_n = \frac{\pi \times (d_n)^2}{4}$ (An = area of nozzle in.^{2})	0.690	0.690	0.690	
$V_n = \frac{(ASV)(T_E + 460)(2.4)}{(A_n)(T_o + 460)}$ (Vn = average velocity in nozzle ft/sec)	82.2	82.2	82.2	
$P_1 = \frac{(100)(Vn)}{V_E}$ (P1 = percent isokinetic)	100	100	100	
TP = total weight of particulate caught in sampler during a run (g.)	0.6841	0.8489	0.7764	
FW = gain in weight of filter during a run (g.)	0.6489	0.8137	0.7412	
FB = gain in weight of blank filter (to compensate for filter handling) (g.)	-0.0092	-0.0092	-0.0092	
AW = gain in weight from acetone wash of sampler at end of each series of runs (complete test) (g.)	0.0806	0.0806	0.0806	
AB = gain in weight of blank volume of acetone (to compensate for impurities in acetone) (g.)	0.0027	0.0027	0.0027	
N = number of runs in each test over which only a single probe wash occurs	3	3	3	
$TP = FW - FB + \frac{AW - AB}{N}$ (TP = total particulate catch per sample run)	0.6841	0.8489	0.7764	

Company Halls Gin Co. Test Date Oct. 26, 1988

Cyclone I.D. Mote Trash Cyclone 7A

Run #	1	2	3	Ave.
M_s = percent moisture in exit gases (weighted averages of percent moistures obtained in inlet ducts)	1.8	1.8	1.8	
$QS_{std} = \frac{(SV)\ (17.71)\ (P_{bar})\ (1-\frac{Ms}{-100})}{(T_o + 460)}$ (QSstd = total volume sampled at standard conditions ft^3)	341.7	341.7	341.7	
C_s (gr/dscf) $= \frac{(15.43)\ (TP)}{(QS_{std})}$ (Cs = particulate concentration)	0.0309	0.0383	0.0351	0.0348
$PMR_{lb/hr} = (C_s)\ (TQ_{std})\ (0.00857)$ TQ_{std} = (total air into cyclone) (PMR = mass emission rate)	0.33	0.40	0.37	0.37

(Note 1)

The rate of air flow through the orifice is precalculated for all pressure drops across the orifice using the various nozzles for an orifice temperature of 60°F. This figure is then converted to the actual air flow at the orifice temperature by the equation:

$$SR = \frac{(SR60)\ (T_o = 460)}{520}$$

Where: SR60 = sampling rate through orifice at 60°F
To = average temperature of orifice (°F)

JS/ah/APCHd1

RADER II
MOTE
CYCLONE 7A
BLANK
10/20/88
HALLS COTTON BIN

Filter No. 001664

City & Station

Date Start ____ Mo ____ Day ____ Yr ____ Hr

Flow Time
Stop ____ Stop ____

Date Stop ____ Mo ____ Day ____ Yr ____ Hr

Start ____ Start ____

Ave ____ Total ____

Remarks

Wt Sample & Filter 4.3212

Wt Filter 4.3304

Wt Sample -0.0092

Filter Conc.

Initial weighing by WCH DATE 10-10-88

Final weighing by WCH Date 11-8-88

Metals sample taken by ____ Date ____

Microscopic sample taken by ____ Date ____

Sample Custody

1. Collected by ____ Date ____
   Delivered to ____ Date ____
2. Received by ____ Date ____
   Delivered to ____ Date ____
3. Received by ____ Date ____
   Delivered to ____ Date ____
4. Received in laboratory by ____
   Date ____ from ____

PH-2657
LAB 8/88

Paper II
Mote
Cyclone 7A
Run #1
10/10/88
Hales Cottonwood

Filter No. 001635

City & Station

Date Start Mo Day Yr Hr

Flow Time
Stop Stop
Start Start
Ave Total

Date Stop Mo Day Yr Hr

Remarks

Wt Sample & Filter 4.9999

Wt Filter 4.3510

Wt Sample 0.6489

Filter Conc.

Initial weighing by WCH DATE 10-10-88

Final weighing by WCH Date 11-8-88

Metals sample taken by Date

Microscopic sample taken by Date

Sample Custody

1. Collected by Date
   Delivered to Date
2. Received by Date
   Delivered to Date
3. Received by Date
   Delivered to Date
4. Received in laboratory by
   Date from

PH-2657
LAB 8/88

Radian II
Note
Cyclone 7A
Run #2
10/20/88
Hales Cotton Gin

Filter No. 001007

City & Station

Date Start ___ Mo ___ Day ___ Yr ___ Hr

Date Stop ___ Mo ___ Day ___ Yr ___ Hr

Flow Time
Stop ___ Stop ___
Start ___ Start ___
Ave ___ Total ___

Remarks

Wt Sample & Filter 5.2758

Wt Filter 4.4621

Wt Sample 0.8137

Filter Conc.

Initial weighing by
WCH DATE 10-11-88

Final weighing by
WCH Date 11-8-88

Metals sample taken by ___ Date ___

Microscopic sample taken by ___ Date ___

Sample Custody

1. Collected by ___ Date ___
   Delivered to ___ Date ___
2. Received by ___ Date ___
   Delivered to ___ Date ___
3. Received by ___ Date ___
   Delivered to ___ Date ___
4. Received in laboratory by ___
   Date ___ from ___

PII-2857
LAB 8/86

Vader II
MOTE
CYCLONE 7A
Run #3
10/26/88
Hills Cotton Gin

Filter No. 001669

City & Station

Date Start ____ Mo ____ Day ____ Yr ____ Hr

Flow Time
Stop ____ Stop ____

Date Stop ____ Mo ____ Day ____ Yr ____ Hr

Start ____ Start ____

Ave ____ Total ____

Remarks

Wt Sample & Filter 5.0694 5.0726 11-9-88

Wt Filter 4.3282

Wt Sample 0.7412

Filter Conc.

Initial weighing by WCH DATE 10-10-88

Final weighing by WCH Date 11-8-88

Metals sample taken by ____ Date ____

Microscopic sample taken by ____ Date ____

Sample Custody

1. Collected by ____ Date ____
   Delivered to ____ Date ____
2. Received by ____ Date ____
   Delivered to ____ Date ____
3. Received by ____ Date ____
   Delivered to ____ Date ____
4. Received in laboratory by ____
   Date ____ from ____

PH-2657
LAB 8/86

SOURCE SAMPLING PARTICULATE LAB DATA (method 5), Sheet APC 616

Company Halls, TN Cotton Gin Company No. _____

Process Mote Cyclone, 7A Test Date 10-26-88

ACETONE BLANK APC 603

Run No.	_____	_____	_____
Beaker No.	12	13	_____
Acetone Volume, ml.	150	130	280
Beaker + Acetone Residue Wt., g	110.4916	108.3142	_____
Beaker tare weight, g	110.4892	108.3128	_____
Net weight, g	0.0024	0.0014	0.0038 total
Residue factor (R.f.), g/ml ($\frac{\text{net wt.}}{\text{acetone vol.}}$)	_____	_____	0.0000( )

FRONT HALF ACETONE WASH APC 616

Run. No.	1,2+3	_____	_____
Beaker No.	9	10	_____
Wash vol., ml	100	100	_____
Gross residue wt.g.	0.0382	0.0424	_____
Blank wt., g (R.f. x wash vol.)	0.0010	0.0010	_____
Net wt., g.	0.0372	0.0414	0.0785 total

CYCLONE FIELD DATA FORM

Company HALLS GIN CO. Date Oct. 27, 1988

Cyclone I. D. 7B

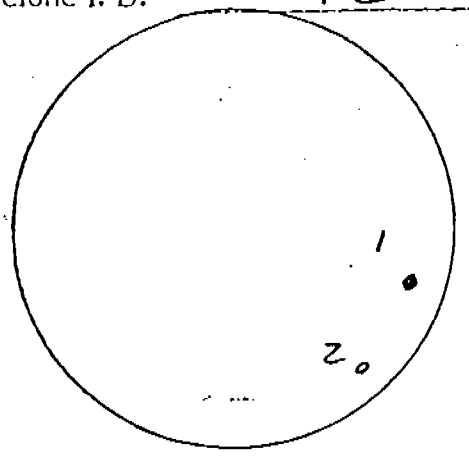

Approximate area of measurable flow and points sampled

point #	ΔP	ΔH
1	1.5	.20
2	1.5	.20

exit dry bulb 66°

exit wet bulb 65°

train # 2

nozzle diameter .937

orifice temp. see below

barometric pressure 29.74

CYCLONE DIMENSIONS: CHECK THE APPROPRIATE EXIT CONFIGURATION:

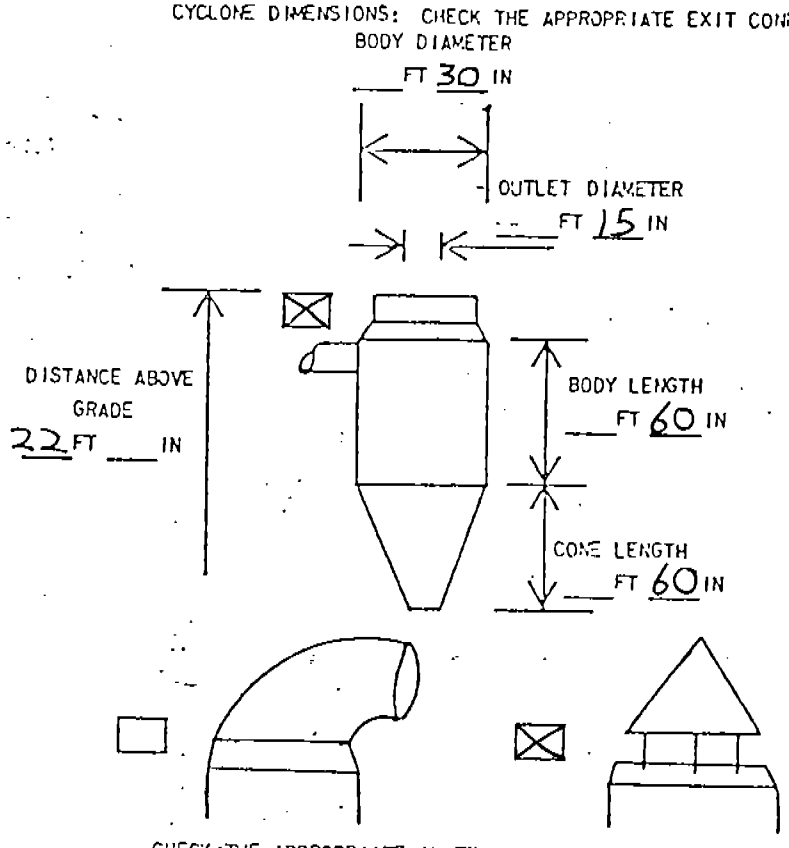

CHECK THE APPROPRIATE INLET CONFIGURATION:

If different from above draw diagram below:

COMMENTS

RUN #	TIME	T_s (°F)	T_o (°F)
1	0815-0830	66°	67°
2	0835-0850	66°	67°
3	0900-0915	66°	67°

CALCULATION OF ACTUAL EMISSIONS

HALLS GIN COMPANY (49-00074)

Source Identification Mote Trash Cyclone 7B

Test Date Oct. 27, 1988

Q = actual airflow in ft^3/min* 1,250

T_d = dry bulb temperature at exhaust point 66°F

T_w = wet bulb temperature at exhaust point 65°F

M = percent moisture in exhaust gases 2.1%

P_{bar} = barometric pressure 29.74

$$Q_{std} = (Q)\ (1 - \frac{M}{100})$$

1,224

Q_{std} in dry standard ft^3/min

* Based on fan data obtained from the designer and builder of the gin. The fan data is at ambient temperature, which is approximately 70° F. Barometric pressures measured during the testing were within one percent of 29.92 in. of Hg. Therefore, the given flows are considered to be at standard conditions.

Company Halls Gin Co. Test Date Oct. 27, 1988

Cyclone I.D. Mote Trash Cyclone 7B

Point No.	1	2	3	4	5	6
Point ΔP	1.5	1.5				
SR60 = sampling rate through orifice at 60°F (see Note 1 on third page following)	23.063	23.063				
T_o = average temperature of orifice (°F)	67	67				
$SR = \frac{(SR60)(T_o + 460)}{520}$ (SR = Sampling rate in ft/min)	23.373	23.373				
T_p = time per sample point (min)	7.5	7.5				

Run #	1	2	3	Ave.
$SV = (T_p)_1 (SR)_1 + (T_p)_2 (SR)_2 + \ldots$ (SV = total sample volume in ft^3)	350.60	350.60	350.60	
T_t = total sampling time (min.)	15	15	15	
$ASV_{ft^3/min} = \frac{SV}{T_t}$ (ASV = average volume sampled)	23.373	23.373	23.373	
T_E = average temperature of exit (°F)	66	66	66	
M_E = molecular weight of exit gases (weighted averages of molecular weights obtained in inlet ducts)	28.77	28.77	28.77	
P_{bar} = barometric pressure	29.74	29.74	29.74	
C_p = 0.99 (pitot tube coeficient)	0.99	0.99	0.99	
$V_E = (85.48)(C_p)\left[\text{AVE}\sqrt{\Delta P_E}\right]\left[\sqrt{\frac{(T_E + 460)}{(M_E)(P_{bar})}}\right]$ (VE = average velocity at sampling points ft/sec)	81.3	81.3	81.3	
d_n = diameter of nozzle (in.)	0.937	0.937	0.937	

Company Halls Gin Co. Test Date Oct. 27, 1988

Cyclone I.D. Mote Trash Cyclone 7B

Run #	1	2	3	Ave.
$A_n = \frac{\pi \times (d_n)^2}{4}$ (An = area of nozzle in.^{2})	0.690	0.690	0.690	
$V_n = \frac{(ASV)(T_E + 460)(2.4)}{(A_n)(T_o + 460)}$ (Vn = average velocity in nozzle ft/sec)	81.1	81.1	81.1	
$P_1 = \frac{(100)(Vn)}{V_E}$ (P1 = percent isokinetic)	99.8	99.8	99.8	
TP = total weight of particulate caught in sampler during a run (g.)	0.8298	0.9050	0.6638	
FW = gain in weight of filter during a run (g.)	0.8068	0.8820	0.6408	
FB = gain in weight of blank filter (to compensate for filter handling) (g.)	-0.0005	-0.0005	-0.0005	
AW = gain in weight from acetone wash of sampler at end of each series of runs (complete test) (g.)	0.0698	0.0698	0.0698	
AB = gain in weight of blank volume of acetone (to compensate for impurities in acetone) (g.)	0.0022	0.0022	0.0022	
N = number of runs in each test over which only a single probe wash occurs	3	3	3	
$TP = FW - FB + \frac{AW - AB}{N}$ (TP = total particulate catch per sample run)	0.8298	0.9050	0.6638	

Company Halls Gin Co. Test Date Oct. 27, 1988

Cyclone I.D. Mote Trash Cyclone 7B

Run #	1	2	3	Ave.
M_s = percent moisture in exit gases (weighted averages of percent moistures obtained in inlet ducts)	2.1	2.1	2.1	
$QS_{std} = \frac{(SV)(17.71)(P_{bar})(1-\frac{Ms}{-100})}{(T_o + 460)}$ (QSstd = total volume sampled at standard conditions ft^3)	343.0	343.0	343.0	
C_s (gr/dscf) = $\frac{(15.43)(TP)}{(QS_{std})}$ (Cs = particulate concentration)	0.0373	0.0407	0.0299	0.0360
$PMR_{lb/hr} = (C_s)(TQ_{std})(0.00857)$ TQ_{std} = (total air into cyclone) (PMR = mass emission rate)	0.391	0.43	0.314	0.38

(Note 1)

The rate of air flow through the orifice is precalculated for all pressure drops across the orifice using the various nozzles for an orifice temperature of 60°F. This figure is then converted to the actual air flow at the orifice temperature by the equation:

$$SR = \frac{(SR60)(T_o = 460)}{520}$$

Where: SR60 = sampling rate through orifice at 60°F
To = average temperature of orifice (°F)

JS/ah/APCHd1

RADEX II
INSIDE TRASH
CYCLONE #5
BLANK
10/27/88
GLASS CONTAINER

Filter No. 001672

City & Station

Date Start ___ Mo ___ Day ___ Yr ___ Hr

Date Stop ___ Mo ___ Day ___ Yr ___ Hr

Flow Time
Stop ___ Stop ___
Start ___ Start ___
Ave ___ Total ___

Remarks

Wt Sample & Filter 4.3153

Wt Filter 4.3158

Wt Sample -0.0005

Filter Conc.

Initial weighing by
WCH DATE 10-11-88

Final weighing by
WCH Date 11-8-88

Metals sample taken by ___ Date ___

Microscopic sample taken by ___ Date ___

Sample Custody

1. Collected by ___ Date ___
   Delivered to ___ Date ___
2. Received by ___ Date ___
   Delivered to ___ Date ___
3. Received by ___ Date ___
   Delivered to ___ Date ___
4. Received in laboratory by ___
   Date ___ from ___

PII-2057
LAB 8/86

PADER II
MOTE TRASH
CYCLONE #3
RUN #1
10/27/88
HALLS COTTON GIN

Filter No. 0DL623

City & Station

Date Start Mo Day Yr Hr

Date Stop Mo Day Yr Hr

Flow Time
Stop Stop
Start Start
Ave Total

Remarks

Wt Sample & Filter 5.1067

Wt Filter 4.2999 4.2996 10-12-88 WCH

Wt Sample 0.8068

Initial weighing by
DATE 10-11-88

Final weighing by
WCH Date 11-8-88

Filter Conc.

Metals sample taken by Date

Microscopic sample taken by Date

Sample Custody

1. Collected by Date
   Delivered to Date
2. Received by Date
   Delivered to Date
3. Received by Date
   Delivered to
4. Received in laboratory by
   Date from

PII-2657
LAD 8/88

Rader II
Mote Trash
Cyclone #3
Run #2
10/27/88
Halls Cotton Gin

Filter No. 001671

City & Station

Date Start ____ Mo ____ Day ____ Yr ____ Hr

Flow Time
Stop ____ Stop ____
Start ____ Start ____
Ave ____ Total ____

Date Stop ____ Mo ____ Day ____ Yr ____ Hr

Remarks

Wt Sample & Filter 5.2117

Wt Filter 4.3297

Wt Sample 0.882

Filter Conc.

Initial weighing by WCH DATE 10-11-88

Final weighing by WCH Date 11-8-88

Metals sample taken by ____ Date ____

Microscopic sample taken by ____ Date ____

Sample Custody

1. Collected by ____ Date ____
   Delivered to ____ Date ____
2. Received by ____ Date ____
   Delivered to ____ Date ____
3. Received by ____ Date ____
   Delivered to ____ Date ____
4. Received in laboratory by ____
   Date ____ from ____

PH-2857
LAB 8/88

Rader II
Mote Trash
Cyclone 7B
Run #3
10/27/78
Hills Cotton Gin

Filter No. 001075

City & Station

Date Start Mo Day Yr Hr

Flow Time
Stop Stop
Start Start
Ave Total

Date Stop Mo Day Yr Hr

Remarks

Wt Sample & Filter 4.9645

Wt Filter 4.3237

Wt Sample 0.6408

Filter Conc.

Initial weighing by WCH DATE 10-11-88

Final weighing by WCH Date 11-8-88

Metals sample taken by Date

Microscopic sample taken by Date

Sample Custody

1. Collected by Date
   Delivered to Date
2. Received by Date
   Delivered to Date
3. Received by Date
   Delivered to Date
4. Received in laboratory by
   Date from

PII-2057
LAB 8/86

SOURCE SAMPLING PARTICULATE LAB DATA (method 5), Sheet APC 618

Company Halls, TN Cotton Gin Company No. _____

Process Mote Trash - Cyclone 7B Test Date 10-27

ACETONE BLANK APC 617

Run No.	_____	_____	_____
Beaker No.	7	8	_____
Acetone Volume, ml.	125	150	275 total
Beaker + Acetone Residue Wt., g	110.9295	110.0968	_____
Beaker tare weight, g	110.9287	110.0960	_____
Net weight, g	0.0008	0.0008	0.0016 total
Residue factor (R.f.), g/ml ($\frac{\text{net wt.}}{\text{acetone vol.}}$)	_____	_____	6×10^{-6})

FRONT HALF ACETONE WASH APC 619

Run. No.	1, 2 + 3	_____	_____
Beaker No.	5	6	_____
Wash vol., ml	200	175	_____
Gross residue wt.g.	0.0320	0.0378	_____
Blank wt., g (R.f. x wash vol.)	0.0012	0.0010	_____
Net wt., g.	0.0308	0.0368	0.0676 total

CYCLONE FIELD DATA FORM

Company HALLS GIN CO Date Oct. 27, 1988

Cyclone I. D. 8A

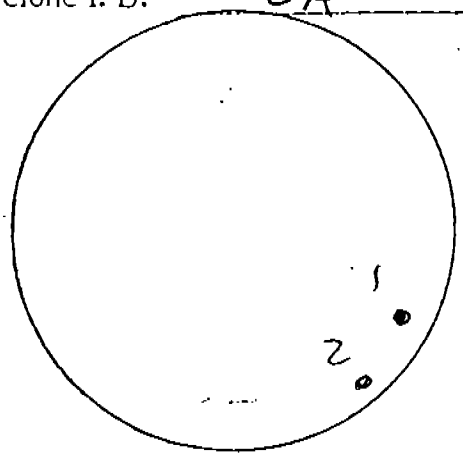

Approximate area of measurable flow and points sampled

point #	ΔP	ΔH
1	1.5	.120
2	1.5	.20

exit dry bulb 78°

exit wet bulb 62°

train # 2

nozzle diameter .937

orifice temp. see below

barometric pressure 29.76

CYCLONE DIMENSIONS: CHECK THE APPROPRIATE EXIT CONFIGURATION

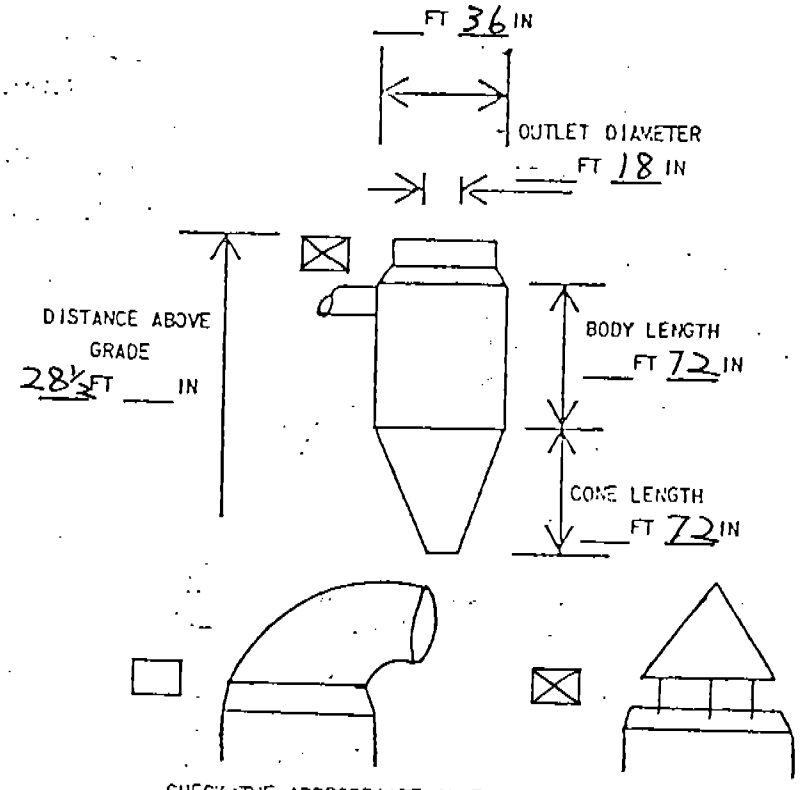

CHECK THE APPROPRIATE INLET CONFIGURATION:

If different from above draw diagram below:

COMMENTS

RUN #	TIME	T_s (°F)	T_o (°F)
1	0945 - 1000	78°	78°
2	1005 - 1020	78°	79°
3	1030 - 1045	78°	79°

CALCULATION OF ACTUAL EMISSIONS

HALLS GIN COMPANY (49-00074)

Source Identification Cotton Waste Disposal Cyclone 8A

Test Date Oct. 27, 1988

Q = actual airflow in ft^3/min* 1,250

T_d = dry bulb temperature at exhaust point 78°F

T_w = wet bulb temperature at exhaust point 62°F

M = percent moisture in exhaust gases 1.9%

P_{bar} = barometric pressure 29.76

$$Q_{std} = (Q)\ (1 - \frac{M}{100})$$

1,226

Q_{std} in dry standard ft^3/min

* Based on fan data obtained from the designer and builder of the gin. The fan data is at ambient temperature, which is approximately 70° F. Barometric pressures measured during the testing were within one percent of 29.92 in. of Hg. Therefore, the given flows are considered to be at standard conditions.

Company Halls Gin Co. Test Date Oct. 27, 1988

Cotton Waste Disposal

Cyclone I.D. Cyclone 8A

Point No.	1	2	3	1 & 4	2 & 5	6
	run 1			runs 2&3		
Point ΔP	1.5	1.5		1.5	1.5	
SR60 = sampling rate through orifice at 60°F (see Note 1 on third page following)	22.849	22.849		22.849	22.849	
T_o = average temperature of orifice (°F)	78	78		79	79	
$SR = \frac{(SR60)(T_o + 460)}{520}$ (SR = Sampling rate in ft/min)	23.640	23.640		23.684	23.684	
T_p = time per sample point (min)	7.5	7.5		7.5	7.5	

Run #	1	2	3	Ave.
$SV = (T_p)_1 (SR)_1 + (T_p)_2 (SR)_2 + \ldots$ (SV = total sample volume in ft^3)	354.6	355.3	355.3	
T_t = total sampling time (min.)	15	15	15	
$ASV_{ft^3/min} = \frac{SV}{T_t}$ (ASV = average volume sampled)	23.640	23.684	23.684	
T_E = average temperature of exit (°F)	78	78	78	
M_E = molecular weight of exit gases (weighted averages of molecular weights obtained in inlet ducts)	28.79	28.79	28.79	
P_{bar} = barometric pressure	29.76	29.76	29.76	
C_p = 0.99 (pitot tube coeficient)	0.99	0.99	0.99	
$V_E = (85.48)(C_p)\left[AVE\sqrt{\Delta P_E}\right]\left[\sqrt{\frac{(T_E + 460)}{(M_E)(P_{bar})}}\right]$ (VE = average velocity at sampling points ft/sec)	82.1	82.1	82.1	
d_n = diameter of nozzle (in.)	0.937	0.937	0.937	

Company Halls Gin Co. Test Date Oct. 27, 1988

Cotton Waste Disposal

Cyclone I.D. Cyclone 8A

Run #	1	2	3	Ave.
$A_n = \frac{\pi \times (d_n)^2}{4}$ (An = area of nozzle in.^{2})	0.690	0.690	0.690	
$V_n = \frac{(ASV)(T_E + 460)(2.4)}{(A_n)(T_o + 460)}$ (Vn = average velocity in nozzle ft/sec)	82.2	82.2	82.2	
$P_1 = \frac{(100)(Vn)}{V_E}$ (P1 = percent isokinetic)	100	100	100	
TP = total weight of particulate caught in sampler during a run (g.)	1.3670	1.3041	1.5988	
FW = gain in weight of filter during a run (g.)	1.3410	1.2781	1.5728	
FB = gain in weight of blank filter (to compensate for filter handling) (g.)	-0.0025	-0.0025	-0.0025	
AW = gain in weight from acetone wash of sampler at end of each series of runs (complete test) (g.)	0.0721	0.0721	0.0721	
AB = gain in weight of blank volume of acetone (to compensate for impurities in acetone) (g.)	0.0015	0.0015	0.0015	
N = number of runs in each test over which only a single probe wash occurs	3	3	3	
$TP = FW - FB + \frac{AW - AB}{N}$ (TP = total particulate catch per sample run)	1.3670	1.3041	1.5988	

Company Halls Gin Co. Test Date Oct. 27, 1988

Cotton Waste Disposal

Cyclone I.D. Cyclone 8A

Run #	1	2	3	Ave.
M_S = percent moisture in exit gases (weighted averages of percent moistures obtained in inlet ducts)	1.9	1.9	1.9	
$QS_{std} = \frac{(SV)(17.71)(P_{bar})(1-\frac{Ms}{100})}{(T_o + 460)}$ (QSstd = total volume sampled at standard conditions ft^3)	340.8	340.8	340.8	
C_s (gr/dscf) = $\frac{(15.43)(TP)}{(QS_{std})}$ (Cs = particulate concentration)	0.0619	0.0590	0.0724	0.0644
$PMR_{lb/hr} = (C_s)(TQ_{std})(0.00857)$ TQ_{std} = (total air into cyclone) (PMR = mass emission rate)	0.65	0.62	0.761	0.68

(Note 1)

The rate of air flow through the orifice is precalculated for all pressure drops across the orifice using the various nozzles for an orifice temperature of 60°F. This figure is then converted to the actual air flow at the orifice temperature by the equation:

$$SR = \frac{(SR60)(T_o = 460)}{520}$$

Where: SR60 = sampling rate through orifice at 60°F
To = average temperature of orifice (°F)

JS/ah/APCHd1

PEDIATRIC II
COTTON WASTE DISPOSAL
CYCLONE 6A
BLANK
10/27/88
HALLS COTTON GIN

Filter No. 001C77

City & Station

Date Start ___ Mo ___ Day ___ Yr ___ Hr

Date Stop ___ Mo ___ Day ___ Yr ___ Hr

Flow Time
Stop ___ Stop ___
Start ___ Start ___
Ave ___ Total ___

Remarks

Wt Sample & Filter 4.4918

Wt Filter 4.4943

Wt Sample WCH -0.0025 -0.0025

Filter Conc.

Initial weighing by
WCH DATE 10-11-88

Final weighing by
WCH Date 11-8-88

Metals sample taken by ___ Date ___

Microscopic sample taken by ___ Date ___

Sample Custody

1. Collected by ___ Date ___
   Delivered to ___ Date ___
2. Received by ___ Date ___
   Delivered to ___ Date ___
3. Received by ___ Date ___
   Delivered to ___ Date ___
4. Received in laboratory by ___
   Date ___ from ___

PII-2057
LAB 8/88

Radex II
Cotton Waste Disposal
Cyclone 6A
Kunath
10/27/86
Miles Cotton Gin

Filter No. 001673

City & Station

Date Start Mo Day Yr Hr

Date Stop Mo Day Yr Hr

Flow Time
Stop Stop
Start Start
Ave Total

Remarks

Wt Sample & Filter 5.7999

Wt Filter 4.4589

Wt Sample 1.341

Filter Conc.

Initial weighing by WCH DATE 10-11-88

Final weighing by WCH Date 11-8-88

Metals sample taken by Date

Microscopic sample taken by Date

Sample Custody

1. Collected by Date
   Delivered to Date
2. Received by Date
   Delivered to Date
3. Received by Date
   Delivered to Date
4. Received in laboratory by
   Date from

PH-2857
LAB 8/86

EADER II
Cotton Waste Disposal
Cyclone 8A
Run #2
10/27/88
Hills Cotton Gin

Filter No. 001682

City & Station

Date Start ___ Mo ___ Day ___ Yr ___ Hr

Date Stop ___ Mo ___ Day ___ Yr ___ Hr

Flow Time
Stop ___ Stop ___
Start ___ Start ___
Ave ___ Total ___

Remarks

Wt Sample & Filter 5.7360

Wt Filter 4.4529

Wt Sample 1.2781

Filter Conc.

Initial weighing by
WCH DATE 10-11-88

Final weighing by
WCH Date 11/8/88

Metals sample taken by ___ Date ___

Microscopic sample taken by ___ Date ___

Sample Custody

1. Collected by ___ Date ___
   Delivered to ___ Date ___
2. Received by ___ Date ___
   Delivered to ___ Date ___
3. Received by ___ Date ___
   Delivered to ___ Date ___
4. Received in laboratory by ___
   Date ___ from ___

PH-2057
LAB 8/88

PAPER II
Cotton Waste Disposal
Cyclone 8A
Run #3
10/27/88
Hales Cotton Gin

Filter No. 001683

City & Station

Date Start ___ Mo ___ Day ___ Yr ___ Hr Flow Time Stop ___ Stop ___

Date Stop ___ Mo ___ Day ___ Yr ___ Hr Start ___ Start ___

Ave ___ Total ___

Remarks

Wt Sample & Filter 6.0530 Initial weighing by 10-12-88 WCH DATE 10-11-88

Wt Filter 4.4802 4.4799 HS

Wt Sample 1.5728 Final weighing by WCH Date 11-8-88

Filter Conc. ___

Metals sample taken by ___ Date ___

Microscopic sample taken by ___ Date ___

Sample Custody

1. Collected by ___ Date ___

Delivered to ___ Date ___

2. Received by ___ Date ___

Delivered to ___ Date ___

3. Received by ___ Date ___

Delivered to ___

4. Received in laboratory by ___

Date ___ from ___

PII-2857
LAB 8/86

SOURCE SAMPLING PARTICULATE LAB DATA (method 5), Sheet APC 619

Company Halls, TN Cotton Gin Company No. _____

Process Cotton Waste Disposal Cyclone 8A Test Date 10-27-88

ACETONE BLANK APC 617

Run No.	_____	_____	_____
Beaker No.	7	8	175 total
Acetone Volume, ml.	125	150	
Beaker + Acetone Residue Wt., g	110.9295	110.0968	_____
Beaker tare weight, g	110.9287	110.0960	_____
Net weight, g	0.0008	0.0008	0.0016 total
Residue factor (R.f.), g/ml ($\frac{\text{net wt.}}{\text{acetone vol.}}$)	_____	_____	6×10^{-6})

FRONT HALF ACETONE WASH APC 619

Run. No.	1,2+3	_____	_____
Beaker No.	3	4	_____
Wash vol., ml	150	100	_____
Gross residue wt.g.	0.0459	0.0262	_____
Blank wt., g (R.f. x wash vol.)	0.0009	0.0006	_____
Net wt., g.	0.0450	0.0256	0.0706 total

CYCLONE FIELD DATA FORM

Company HALLS GIN Co Date Oct. 27, 1988

Cyclone I. D. 8B

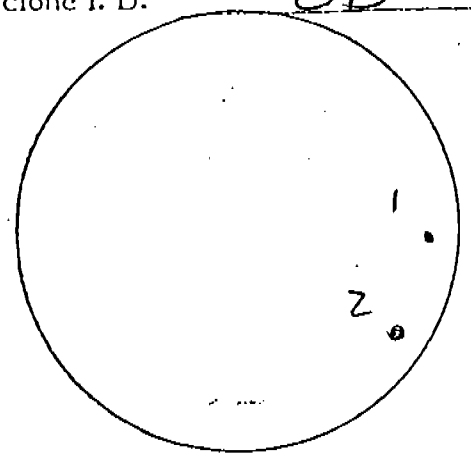

Approximate area of measurable flow and points sampled

point #	ΔP	ΔH
1	1.5	.120
2	1.5	.120

exit dry bulb 78°

exit wet bulb 62°

train # 2

nozzle diameter .937

orifice temp. see below

barometric pressure 29.77

CYCLONE DIMENSIONS: CHECK THE APPROPRIATE EXIT CONFIGURATION

BODY DIAMETER FT 36 IN

OUTLET DIAMETER FT 18 IN

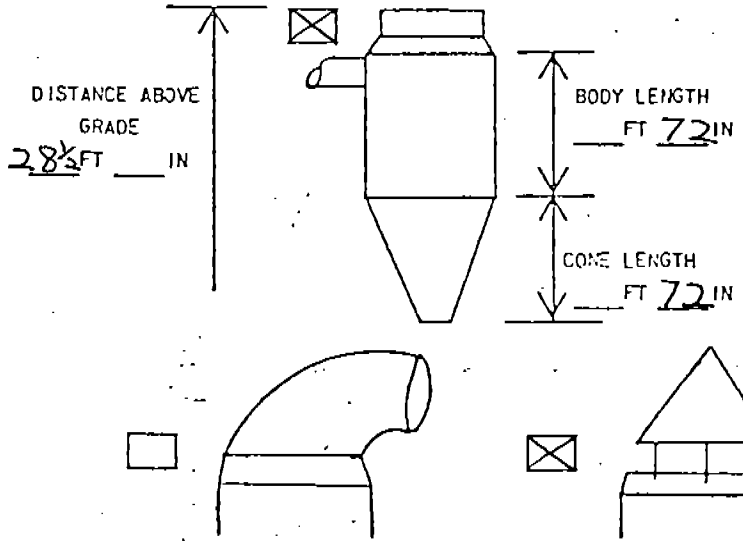

CHECK THE APPROPRIATE INLET CONFIGURATION:

If different from above draw diagram below:

COMMENTS

RUN #	TIME	T_s (°F)	T_o (°F)
1	1105 - 1120	78°	79°
2	1135 - 1150	81°	81°
3	1200 - 1215	84°	83°

CALCULATION OF ACTUAL EMISSIONS

HALLS GIN COMPANY (49-00074)

Source Identification Cotton Waste Disposal Cyclone 8B

Test Date Oct. 27, 1988

Q = actual airflow in ft^3/min* 1,250

T_d = dry bulb temperature at exhaust point 78°F

T_w = wet bulb temperature at exhaust point 62°F

M = percent moisture in exhaust gases 1.9%

P_{bar} = barometric pressure 29.77

$$Q_{std} = (Q)\ (1 - \frac{M}{100})$$

1,226

Q_{std} in dry standard ft^3/min

* Based on fan data obtained from the designer and builder of the gin. The fan data is at ambient temperature, which is approximately 70° F. Barometric pressures measured during the testing were within one percent of 29.92 in. of Hg. Therefore, the given flows are considered to be at standard conditions.

Company Halls Gin Co. Test Date Oct. 27, 1988

Cotton Waste Disposal

Cyclone I.D. Cyclone 8B

Page 1 of 3

Point No.	1	2	3	4	5	6
	run 1		run 2		run 3	
Point ΔP	1.5	1.5	1.5	1.5	1.5	1.5
SR60 = sampling rate through orifice at 60°F (see Note 1 on third page following)	22.849	22.849	22.849	22.849	22.849	22.849
T_o = average temperature of orifice (°F)	79	79	81	81	83	83
$SR = \frac{(SR60)(T_o + 460)}{520}$ (SR = Sampling rate in ft/min)	23.684	23.684	23.772	23.772	23.860	23.860
T_p = time per sample point (min)	7.5	7.5	7.5	7.5	7.5	7.5

Run #	1	2	3	Ave.
$SV = (T_p)_1 (SR)_1 + (T_p)_2 (SR)_2 + \ldots$ (SV = total sample volume in ft^3)	355.3	356.6	357.9	
T_t = total sampling time (min.)	15	15	15	
$ASV_{ft^3/min} = \frac{SV}{T_t}$ (ASV = average volume sampled)	23.684	23.772	23.860	
T_E = average temperature of exit (°F)	78	81	84	
M_E = molecular weight of exit gases (weighted averages of molecular weights obtained in inlet ducts)	28.79	28.79	28.79	
P_{bar} = barometric pressure	29.77	29.77	29.77	
C_p = 0.99 (pitot tube coeficient)	0.99	0.99	0.99	
$V_E = (85.48)(C_p)\left[\text{AVE}\sqrt{\Delta P_E}\right]\left[\sqrt{\frac{(T_E + 460)}{(M_E)(P_{bar})}}\right]$ (VE = average velocity at sampling points ft/sec)	82.1	82.3	82.6	
d_n = diameter of nozzle (in.)	0.937	0.937	0.937	

Company Halls Gin Co. Test Date Oct. 27, 1988

Cotton Waste Disposal

Cyclone I.D. Cyclone 8B

Run #	1	2	3	Ave.
$A_n = \frac{\pi \times (d_n)^2}{4}$ (An = area of nozzle in.^{2})	0.690	0.690	0.690	
$V_n = \frac{(ASV)(T_E + 460)(2.4)}{(A_n)(T_o + 460)}$ (Vn = average velocity in nozzle ft/sec)	82.2	82.7	83.1	
$P_1 = \frac{(100)(Vn)}{V_E}$ (P1 = percent isokinetic)	100	100	101	
TP = total weight of particulate caught in sampler during a run (g.)				
FW = gain in weight of filter during a run (g.)	1.2174	0.8674	Void	
FB = gain in weight of blank filter (to compensate for filter handling) (g.)	-0.0040	-0.0040	-0.0040	
AW = gain in weight from acetone wash of sampler at end of each series of runs (complete test) (g.)				
AB = gain in weight of blank volume of acetone (to compensate for impurities in acetone) (g.)				
N = number of runs in each test over which only a single probe wash occurs				
$TP = FW - FB + \frac{AW - AB}{N}$ (TP = total particulate catch per sample run)				

Company Halls Gin Co. Test Date Oct. 27, 1988

Cotton Waste Disposal

Cyclone I.D. Cyclone 8B

Run #	1	2	3	Ave.
M_s = percent moisture in exit gases (weighted averages of percent moistures obtained in inlet ducts)	1.9	1.9	1.9	
$QS_{std} = \frac{(SV)\ (17.71)\ (P_{bar})\ (1 - \frac{Ms}{100})}{(T_o + 460)}$ (QSstd = total volume sampled at standard conditions ft^3)	340.9	340.9	340.9	
C_s (gr/dscf) $= \frac{(15.43)\ (TP)}{(QS_{std})}$ (Cs = particulate concentration)	0.0553	0.0394		
$PMR_{lb/hr} = (C_s)\ (TQ_{std})\ (0.00857)$ TQ_{std} = (total air into cyclone) (PMR = mass emission rate)	0.581	0.414		

(Note 1)

The rate of air flow through the orifice is precalculated for all pressure drops across the orifice using the various nozzles for an orifice temperature of 60°F. This figure is then converted to the actual air flow at the orifice temperature by the equation:

$$SR = \frac{(SR60)\ (T_o = 460)}{520}$$

Where: SR60 = sampling rate through orifice at 60°F
To = average temperature of orifice (°F)

JS/an/APCHd1

RADER II 211
COTTON WASTE DISPOSAL
CYCLONE B
BLANK
10/27/88
KELLER COTTON GIN

Filter No. 001685

City & Station

Date Start ___ Mo ___ Day ___ Yr ___ Hr

Date Stop ___ Mo ___ Day ___ Yr ___ Hr

Flow Time
Stop ___ Stop ___
Start ___ Start ___
Ave ___ Total ___

Remarks

Wt Sample & Filter 4.4301

Wt Filter 4.4341

Wt Sample -0.0040

Filter Conc.

Initial weighing by
WCH DATE 10-11-88

Final weighing by
WCH Date 11-8-88

Metals sample taken by ___ Date ___

Microscopic sample taken by ___ Date ___

Sample Custody

1. Collected by ___ Date ___
   Delivered to ___ Date ___
2. Received by ___ Date ___
   Delivered to ___ Date ___
3. Received by ___ Date ___
   Delivered to ___ Date ___
4. Received in laboratory by ___
   Date ___ from ___

PII-2857
LAB 8/88

Rader II
Cotton Waste Disposal
Cyclone 2B
Run #1
10/27/88
Hauls Cotton Gin

Filter No. 001683

City & Station

Date Start ____ Mo ____ Day ____ Yr ____ Hr

Flow Time
Stop ____ Stop ____
Start ____ Start ____
Ave ____ Total ____

Date Stop ____ Mo ____ Day ____ Yr ____ Hr

Remarks

Wt Sample & Filter 5.7076

Wt Filter 4.4902

Wt Sample 1.2174

Filter Conc.

Initial weighing by WCH DATE 10-11-88

Final weighing by WCH Date 11-8-88

Metals sample taken by ____ Date ____

Microscopic sample taken by ____ Date ____

Sample Custody

1. Collected by ____ Date ____
   Delivered to ____ Date ____
2. Received by ____ Date ____
   Delivered to ____ Date ____
3. Received by ____ Date ____
   Delivered to ____ Date ____
4. Received in laboratory by ____
   Date ____ from ____

PH-2857
LAB 8/88

RADER II
COTTON WASTE DISPOSAL
CYCLONE 2B
RUN #2
10/27/85
HALLS COTTON GIN

Filter No. CC1687

City & Station

Date Start ___ Mo ___ Day ___ Yr ___ Hr

Date Stop ___ Mo ___ Day ___ Yr ___ Hr

Flow Time
Stop ___ Stop ___
Start ___ Start ___
Ave ___ Total ___

Remarks

Wt Sample & Filter 5.3294

Wt Filter 4.4620

Wt Sample 0.8674

Filter Conc.

Initial weighing by
WCH DATE 10-11-85

Final weighing by
WCH Date 11-8-85

Metals sample taken by ___ Date ___

Microscopic sample taken by ___ Date ___

Sample Custody

1. Collected by ___ Date ___
   Delivered to ___ Date ___
2. Received by ___ Date ___
   Delivered to ___ Date ___
3. Received by ___ Date ___
   Delivered to ___
4. Received in laboratory by ___
   Date ___ from ___

PH-2857
LAB 8/80

VOID
FILTER TORN UP
RECOVERY - FILTER
& RUN VOIDED

RADER II
COTTON WASTE DISPOSAL
CYCLONE #2
RUN #3
10/07/88
HALLS COTTON GIN

Filter No. 001682

City & Station

Date Start Mo Day Yr Hr

Date Stop Mo Day Yr Hr

Flow Time
Stop Stop
Start Start
Ave Total

Remarks

Wt Sample & Filter

Wt Filter 4.4290

Wt Sample

Filter Conc.

Metals sample taken by

Microscopic sample taken by

Initial weighing by WCH DATE 10-11-88

Final weighing by

Date

Date

Date

Sample Custody

1. Collected by Date

Delivered to Date

2. Received by Date

Delivered to Date

3. Received by Date

Delivered to

4. Received in laboratory by

Date from

PH-2857
LAB 8/88

CYCLONE FIELD DATA FORM

Company Halls Gin Co. Date Oct. 27, 1988

Cyclone I. D. Mote Press Cyclone 9

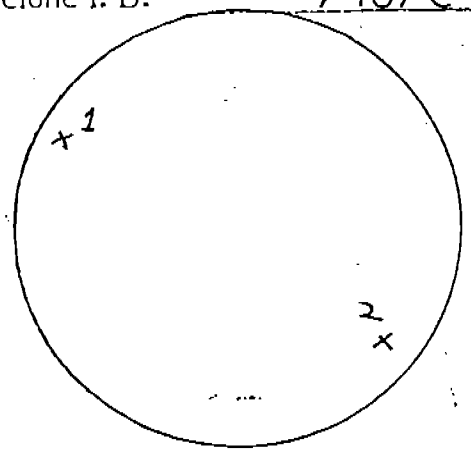

Approximate area of measurable flow and points sampled

point #	ΔP	ΔH
1	1.0	0.23
2	1.0	0.23

exit dry bulb 80°F

exit wet bulb 74°F

train # 1

nozzle diameter 1.116

orifice temp. see below

barometric pressure 29.72

CYCLONE DIMENSIONS: CHECK THE APPROPRIATE EXIT CONFIGURATION

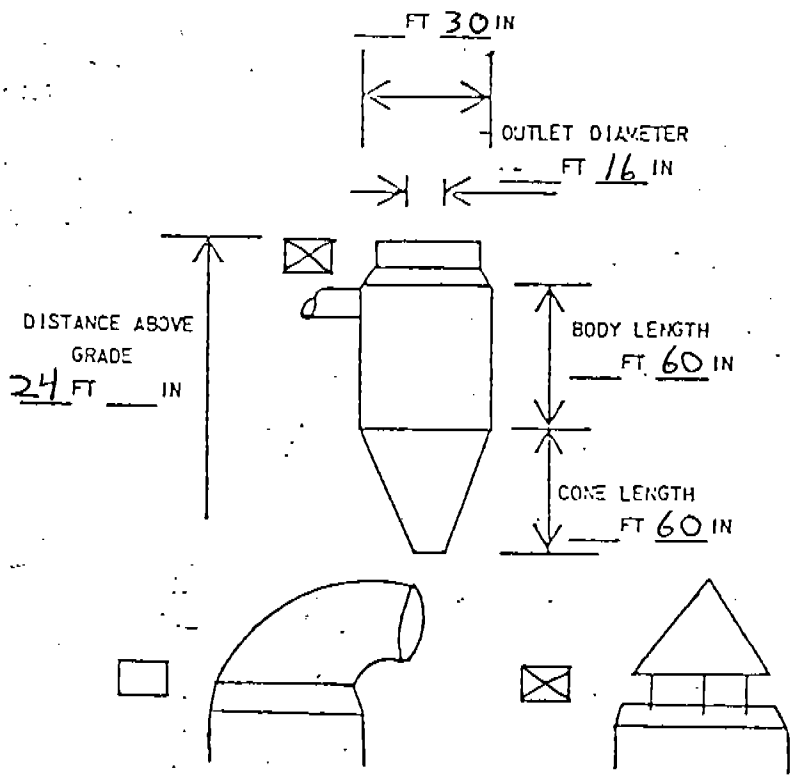

CHECK THE APPROPRIATE INLET CONFIGURATION:

If different from above draw diagram below:

COMMENTS	Run #	Time	T_s (°F)	T_o (°F)
	1	12:51–1:07 PM	80	80
	2	1:14–1:31 PM	80	80
	3	1:40–1:56 PM	80	80

CALCULATION OF ACTUAL EMISSIONS

HALLS GIN COMPANY (49-00074)

Source Identification Mote Press Cyclone 9

Test Date Oct. 27, 1988

Q = actual airflow in ft^3/min* 2,500

T_d = dry bulb temperature at exhaust point 80°F

T_w = wet bulb temperature at exhaust point 74°F

M = percent moisture in exhaust gases 2.8%

P_{bar} = barometric pressure 29.72

$$Q_{std} = (Q)\left(1 - \frac{M}{100}\right)$$

2,430

Q_{std} in dry standard ft^3/min

* Based on fan data obtained from the designer and builder of the gin. The fan data is at ambient temperature, which is approximately 70° F. Barometric pressures measured during the testing were within one percent of 29.92 in. of Hg. Therefore, the given flows are considered to be at standard conditions.

Company Halls Gin Co. Test Date Oct. 27, 1988

Cyclone I.D. Mote Press Cyclone 9

Page 1 of 3

Point No.	1	2	3	4	5	6
Point ΔP	1.0	1.0				
SR60 = sampling rate through orifice at 60°F (see Note 1 on third page following)	26.465	26.465				
T_o = average temperature of orifice (°F)	80	80				
$SR = \frac{(SR60)(T_o + 460)}{520}$ (SR = Sampling rate in ft/min)	27.483	27.483				
T_p = time per sample point (min)	7.5	7.5				

Run #	1	2	3	Ave.
$SV = (T_p)_1 (SR)_1 + (T_p)_2 (SR)_2 + \ldots$ (SV = total sample volume in ft^3)	412.24	412.24	412.24	
T_t = total sampling time (min.)	15	15	15	
$ASV_{ft^3/min} = \frac{SV}{T_t}$ (ASV = average volume sampled)	27,483	27.483	27,483	
T_E = average temperature of exit (°F)	80	80	80	
M_E = molecular weight of exit gases (weighted averages of molecular weights obtained in inlet ducts)	28.69	28.69	28.69	
P_{bar} = barometric pressure	29.72	29.72	29.72	
C_p = 0.99 (pitot tube coeficient)	0.99	0.99	0.99	
$V_E = (85.48)(C_p)\left[AVE\sqrt{\Delta P_E}\right]\left[\sqrt{\frac{(T_E + 460)}{(M_E)(P_{bar})}}\right]$ (VE = average velocity at sampling points ft/sec)	67.3	67.3	67.3	
d_n = diameter of nozzle (in.)	1.116	1.116	1.116	

Company Halls Gin Co. Test Date Oct. 27, 1988

Cyclone I.D. Mote Press Cyclone 9

Run #	1	2	3	Ave.
$A_n = \frac{\pi \times (d_n)^2}{4}$ (An = area of nozzle in.^{2})	0.978	0.978	0.978	
$V_n = \frac{(ASV)(T_E + 460)(2.4)}{(A_n)(T_o + 460)}$ (Vn = average velocity in nozzle ft/sec)	67.4	67.4	67.4	
$P_1 = \frac{(100)(Vn)}{V_E}$ (P1 = percent isokinetic)	100	100	100	
TP = total weight of particulate caught in sampler during a run (g.)	0.4950	0.5644	0.7136	
FW = gain in weight of filter during a run (g.)	0.4754	0.5448	0.6940	
FB = gain in weight of blank filter (to compensate for filter handling) (g.)	-0.0037	-0.0037	-0.0037	
AW = gain in weight from acetone wash of sampler at end of each series of runs (complete test) (g.)	0.0493	0.0493	0.0493	
AB = gain in weight of blank volume of acetone (to compensate for impurities in acetone) (g.)	0.0017	0.0017	0.0017	
N = number of runs in each test over which only a single probe wash occurs	3	3	3	
$TP = FW - FB + \frac{AW - AB}{N}$ (TP = total particulate catch per sample run)	0.4950	0.5644	0.7136	

Company Halls Gin Co. Test Date Oct 27, 1988

Cyclone I.D. Mote Press Cyclone 9

Run #	1	2	3	Ave.
M_S = percent moisture in exit gases (weighted averages of percent moistures obtained in inlet ducts)	2.8	2.8	2.8	
$QS_{std} = \frac{(SV)(17.71)(P_{bar})(1-\frac{Ms}{-100})}{(T_o + 460)}$ (QSstd = total volume sampled at standard conditions ft^3)	390.6	390.6	390.6	
C_s (gr/dscf) $= \frac{(15.43)(TP)}{(QS_{std})}$ (Cs = particulate concentration)	0.0196	0.0223	0.0282	0.0234
$PMR_{lb/hr} = (C_s)(TQ_{std})(0.00857)$ TQ_{std} = (total air into cyclone) (PMR = mass emission rate)	0.41 0.409	0.464	0.59 0.587	0.49

(Note 1)

The rate of air flow through the orifice is precalculated for all pressure drops across the orifice using the various nozzles for an orifice temperature of 60°F. This figure is then converted to the actual air flow at the orifice temperature by the equation:

$$SR = \frac{(SR60)(T_o = 460)}{520}$$

Where: SR60 = sampling rate through orifice at 60°F
To = average temperature of orifice (°F)

JS/ah/APCHd1

BADGER I
MOTE PRESS
CYCLONE 9
BLANK
10/27/88
HALLS COTTON GIN

Filter No. 001602

City & Station

Date Start ___ Mo ___ Day ___ Yr ___ Hr

Date Stop ___ Mo ___ Day ___ Yr ___ Hr

Flow Time
Stop ___ Stop ___
Start ___ Start ___
Ave ___ Total ___

Remarks

Wt Sample & Filter 4.4520
Wt Filter 4.4557
Wt Sample -0.0037
Filter Conc.

Initial weighing by WCH DATE 10-11-88
Final weighing by WCH Date 11-8-88

Metals sample taken by ___ Date ___

Microscopic sample taken by ___ Date ___

Sample Custody

1. Collected by ___ Date ___
   Delivered to ___ Date ___
2. Received by ___ Date ___
   Delivered to ___ Date ___
3. Received by ___ Date ___
   Delivered to ___ Date ___
4. Received in laboratory by ___
   Date ___ from ___

PH-2657
LAB 8/86

RADEK J
MOTE PRESS
CYCLONE 9
RUN #1
10/27/88
HALLS COTTON GIN

Filter No. 001693

City & Station

Date Start ___ Mo ___ Day ___ Yr ___ Hr

Date Stop ___ Mo ___ Day ___ Yr ___ Hr

Flow Time
Stop ___ Stop ___
Start ___ Start ___
Ave ___ Total ___

Remarks

Wt Sample & Filter 4.9000

Wt Filter 4.4246 4.4244 10-12-88 WCH

Wt Sample 0.4754

Filter Conc.

Initial weighing by
WCH DATE 10-11-88

Final weighing by
WCH Date 11-8-88

Metals sample taken by ___ Date ___

Microscopic sample taken by ___ Date ___

Sample Custody

1. Collected by ___ Date ___
   Delivered to ___ Date ___
2. Received by ___ Date ___
   Delivered to ___ Date ___
3. Received by ___ Date ___
   Delivered to ___ Date ___
4. Received in laboratory by ___
   Date ___ from ___

PH-2857
LAB 8/86

RADIAL I
MOTE PRESS
CYCLONE 9
Run #2
10/27/86
Hall's Cotton Gin

Filter No. 001695

City & Station

Date Start ___ Mo ___ Day ___ Yr ___ Hr

Date Stop ___ Mo ___ Day ___ Yr ___ Hr

Flow Time
Stop ___ Stop ___
Start ___ Start ___
Ave ___ Total ___

Remarks

Wt Sample & Filter 4.9755

Wt Filter 4.4307

Wt Sample 0.5448

Filter Conc.

Initial weighing by WCH DATE 10-12-88

Final weighing by WCH Date 11-8-88

Metals sample taken by ___ Date ___

Microscopic sample taken by ___ Date ___

Sample Custody

1. Collected by ___ Date ___
   Delivered to ___ Date ___
2. Received by ___ Date ___
   Delivered to ___ Date ___
3. Received by ___ Date ___
   Delivered to ___
4. Received in laboratory by ___
   Date ___ from ___

PH-2857
LAB 8/88

Paper I
Mote Press
Cyclone 9
Run #3
10/27/88
Haus Cotton Gin

Filter No. 001697

City & Station

Date Start Mo Day Yr Hr

Date Stop Mo Day Yr Hr

Flow Time
Stop Stop
Start Start
Ave Total

Remarks

Wt Sample & Filter 5.0626

Wt Filter WCH/ ~~4.3686~~ 4.3686

Wt Sample 0.694

Filter Conc.

Initial weighing by
WCH DATE 10-12-88

Final weighing by
WCH Date 11-8-88

Metals sample taken by Date

Microscopic sample taken by Date

Sample Custody

1. Collected by Date
   Delivered to Date
2. Received by Date
   Delivered to Date
3. Received by Date
   Delivered to
4. Received in laboratory by
   Date from

SOURCE SAMPLING PARTICULATE LAB DATA (method 5), Sheet APC 622

Company Halls, TN Cotton Gin. Company No. _____

Process Mote Press Cyclone 9 Test Date 10-27-88

ACETONE BLANK APC 617

Run No.	_____	_____	_____
Beaker No.	7	8	_____
Acetone Volume, ml.	125	150	275 total
Beaker + Acetone Residue Wt., g	110.9295	110.0968	_____
Beaker tare weight, g	110.9287	110.0960	_____
Net weight, g	0.0008	0.0008	0.0016 total
Residue factor (R.f.), g/ml ($\frac{\text{net wt.}}{\text{acetone vol.}}$)	_____	_____	6×10^{-6})

FRONT HALF ACETONE WASH APC 622

Run. No.	1, 2 & 3	_____	_____
Beaker No.	13	14	_____
Wash vol., ml	150	145	_____
Gross residue wt.g.	0.0258	0.0235	_____
Blank wt., g (R.f. x wash vol.)	0.0009	0.0009	_____
Net wt., g.	0.0249	0.0226	0.0475 total

CYCLONE FIELD DATA FORM

Company HALLS GIN CO Date Oct. 27, 1988

Cyclone I. D. # 10

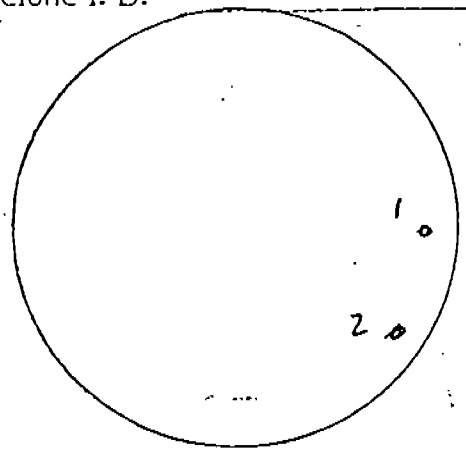

Approximate area of measurable flow and points sampled

point #	ΔP	ΔH
1	1.5	.20
2	1.5	.20

exit dry bulb 86°

exit wet bulb 67°

train # 2

nozzle diameter .937

orifice temp. see below

barometric pressure 29.67

CYCLONE DIMENSIONS: CHECK THE APPROPRIATE EXIT CONFIGURATION

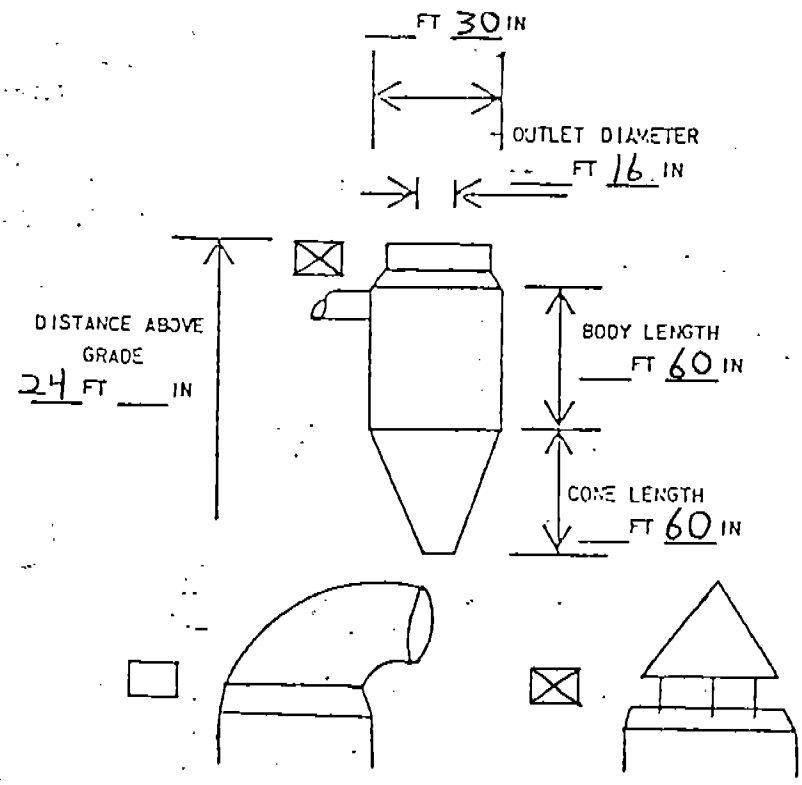

CHECK THE APPROPRIATE INLET CONFIGURATION:

If different from above draw diagram below:

COMMENTS

RUN #	TIME	T_s (°F)	T_o (°F)
1	1425-1440	86°	86°
2	1445-1500	86°	86°
3	1503-1518	86°	86°

CALCULATION OF ACTUAL EMISSIONS

HALLS GIN COMPANY (49-00074)

Source Identification Mote Press Cyclone 10

Test Date Oct. 27, 1988

Q = actual airflow in ft^3/min* 2,500

T_d = dry bulb temperature at exhaust point 86°F

T_w = wet bulb temperature at exhaust point 67°F

M = percent moisture in exhaust gases 2.2%

P_{bar} = barometric pressure 29.67

$$Q_{std} = (Q)\left(1 - \frac{M}{100}\right)$$

2,445

Q_{std} in dry standard ft^3/min

* Based on fan data obtained from the designer and builder of the gin. The fan data is at ambient temperature, which is approximately 70° F. Barometric pressures measured during the testing were within one percent of 29.92 in. of Hg. Therefore, the given flows are considered to be at standard conditions.

Company Halls Gin Co. Test Date Oct. 27, 1988

Cyclone I.D. Mote Press Cyclone 10

Point No.	1	2	3	4	5	6
Point ΔP	1.5	1.5				
SR60 = sampling rate through orifice at 60°F (see Note 1 on third page following)	22.640	22.640				
T_o = average temperature of orifice (°F)	86	86				
$SR = \frac{(SR60)(T_o + 460)}{520}$ (SR = Sampling rate in ft/min)	23.772	23.772				
T_p = time per sample point (min)	7.5	7.5				

Run #	1	2	3	Ave.
$SV = (T_p)_1 (SR)_1 + (T_p)_2 (SR)_2 + \ldots$ (SV = total sample volume in ft^3)	356.58	356.58	356.58	
T_t = total sampling time (min.)	15	15	15	
$ASV_{ft^3/min} = \frac{SV}{T_t}$ (ASV = average volume sampled)	23.772	23.772	23.772	
T_E = average temperature of exit (°F)	86	86	86	
M_E = molecular weight of exit gases (weighted averages of molecular weights obtained in inlet ducts)	28.76	28.76	28.76	
P_{bar} = barometric pressure	29.67	29.67	29.67	
C_p = 0.99 (pitot tube coeficient)	0.99	0.99	0.99	
$V_E = (85.48)(C_p)\left[AVE\sqrt{\Delta P_E}\right]\left[\sqrt{\frac{(T_E + 460)}{(M_E)(P_{bar})}}\right]$ (VE = average velocity at sampling points ft/sec)	82.9	82.9	82.9	
d_n = diameter of nozzle (in.)	0.937	0.937	0.937	

Company Halls Gin Co. Test Date Oct. 27, 1988

Cyclone I.D. Mote Press Cyclone 10

Run #	1	2	3	Ave.
$A_n = \frac{\pi \times (d_n)^2}{4}$ (An = area of nozzle in.^{2})	0.690	0.690	0.690	
$V_n = \frac{(ASV)(T_E + 460)(2.4)}{(A_n)(T_o + 460)}$ (Vn = average velocity in nozzle ft/sec)	82.7	82.7	82.7	
$P_1 = \frac{(100)(Vn)}{V_E}$ (P1 = percent isokinetic)	100	100	100	
TP = total weight of particulate caught in sampler during a run (g.)	0.3506	0.1864	0.2175	
FW = gain in weight of filter during a run (g.)	0.3341	0.1699	0.2010	
FB = gain in weight of blank filter (to compensate for filter handling) (g.)	-0.0065	-0.0065	-0.0065	
AW = gain in weight from acetone wash of sampler at end of each series of runs (complete test) (g.)	0.0316	0.0316	0.0316	
AB = gain in weight of blank volume of acetone (to compensate for impurities in acetone) (g.)	0.0016	0.0016	0.0016	
N = number of runs in each test over which only a single probe wash occurs	3	3	3	
$TP = FW - FB + \frac{AW - AB}{N}$ (TP = total particulate catch per sample run)	0.3506	0.1864	0.2175	

Company Halls Gin Co. Test Date Oct. 27, 1988

Cyclone I.D. Mote Press Cyclone 10

Run #	1	2	3	Ave.
M_s = percent moisture in exit gases (weighted averages of percent moistures obtained in inlet ducts)	2.2	2.2	2.2	
$QS_{std} = \frac{(SV)\ (17.71)\ (P_{bar})\ (1-\frac{Ms}{100})}{(T_o + 460)}$ (QSstd = total volume sampled at standard conditions ft^3)	335.6	335.6	335.6	
C_s (gr/dscf) = $\frac{(15.43)\ (TP)}{(QS_{std})}$ (Cs = particulate concentration)	0.0161	0.0086	0.0100	0.0116
$PMR_{lb/hr} = (C_s)\ (TQ_{std})\ (0.00857)$ TQ_{std} = (total air into cyclone) (PMR = mass emission rate)	0.34 0.337	0.180	0.210	0.24

(Note 1)

The rate of air flow through the orifice is precalculated for all pressure drops across the orifice using the various nozzles for an orifice temperature of 60°F. This figure is then converted to the actual air flow at the orifice temperature by the equation:

$$SR = \frac{(SR60)\ (T_o = 460)}{520}$$

Where: SR60 = sampling rate through orifice at 60°F
To = average temperature of orifice (°F)

JS/ah/APCHd1

RADER II
MOTEPRESS
CYCLONE 10
BLANK
10/27/88
HALLS COTTON GIN

Filter No. 001701

City & Station

Date Start Mo Day Yr Hr

Date Stop Mo Day Yr Hr

Flow Time
Stop Stop
Start Start
Ave Total

Remarks

Wt Sample & Filter 4.3606

Wt Filter 4.3671

Wt Sample -0.0065

Filter Conc.

Initial weighing by WCH DATE 10-12-88

Final weighing by WCH Date 10-8-88

Metals sample taken by Date

Microscopic sample taken by Date

Sample Custody

1. Collected by Date
   Delivered to Date
2. Received by Date
   Delivered to Date
3. Received by Date
   Delivered to
4. Received in laboratory by
   Date from

PH-2857
LAB 8/88

RADER II
MODE PICASS
CYCLONE 10
RUN #1
10/27/88
HALLS COTTON GIN

Filter No. 001702

City & Station

Date Start ___ Mo ___ Day ___ Yr ___ Hr

Date Stop ___ Mo ___ Day ___ Yr ___ Hr

Flow Time
Stop ___ Stop ___
Start ___ Start ___
Ave ___ Total ___

Remarks

Wt Sample & Filter 4.7323

Wt Filter 4.3982

Wt Sample 0.3341

Filter Conc.

Initial weighing by
WCH DATE 10-12-88

Final weighing by
WCH Date 11-8-88

Metals sample taken by ___ Date ___

Microscopic sample taken by ___ Date ___

Sample Custody

1. Collected by ___ Date ___
   Delivered to ___ Date ___
2. Received by ___ Date ___
   Delivered to ___ Date ___
3. Received by ___ Date ___
   Delivered to ___
4. Received in laboratory by ___
   Date ___ from ___

PH-2857
LAB 8/86

RADER II
MOTE PRESS
CYCLONE ID
RUN #2
10/27/88
HOLLIS COTTON GIN

Filter No. 001703

City & Station

Date Start ___ Mo ___ Day ___ Yr ___ Hr

Date Stop ___ Mo ___ Day ___ Yr ___ Hr

Flow Time
Stop ___ Stop ___
Start ___ Start ___
Ave ___ Total ___

Remarks

Wt Sample & Filter 4.5519 10-12-88

Wt Filter 4.3820 4.3825 45

Wt Sample 0.1699

Filter Conc.

Initial weighing by WCH DATE 10-12-88

Final weighing by WCH Date 11-8-88

Metals sample taken by ___ Date ___

Microscopic sample taken by ___ Date ___

Sample Custody

1. Collected by ___ Date ___
   Delivered to ___ Date ___
2. Received by ___ Date ___
   Delivered to ___ Date ___
3. Received by ___ Date ___
   Delivered to ___
4. Received in laboratory by ___
   Date ___ from ___

PH-2657
LAB 8/66

Kadek II
MOTE Press
Cyclone 1D
Run #3
10/27/88
Haus Cotton Gin

001705

Filter No. _____

City & Station _____

Date Start ____ Mo ____ Day ____ Yr ____ Hr Flow Time

Stop _____ Stop _____

Date Stop ____ Mo ____ Day ____ Yr ____ Hr Start _____ Start _____

Ave _____ Total _____

Remarks _____

Wt Sample & Filter 4.5903

Initial weighing by

Wt Filter 4.3893 WCH DATE 10-12-88

Wt Sample 0.201

Final weighing by

Filter Conc. _____ WCH Date 11-8-88

Metals sample taken by _____ Date _____

Microscopic sample taken by _____ Date _____

Sample Custody

1. Collected by _____ Date _____

Delivered to _____ Date _____

2. Received by _____ Date _____

Delivered to _____ Date _____

3. Received by _____ Date _____

Delivered to _____ Date _____

4. Received in laboratory by _____

Date _____ from _____

PH-2857
LAB 9/86

SOURCE SAMPLING PARTICULATE LAB DATA (method 5), Sheet APC 623

Company Halls, TN Cotton Gin Company No. _____

Process Mote Press Cyclone 10 Test Date 10-27-88

ACETONE BLANK APC 617

Run No.			
Beaker No.	7	8	275 total
Acetone Volume, ml.	125	150	
Beaker + Acetone Residue Wt., g	110.9295	110.0968	
Beaker tare weight, g	110.9287	110.0960	
Net weight, g	0.0008	0.0008	0.0016 total
Residue factor (R.f.), g/ml ($\frac{\text{net wt.}}{\text{acetone vol.}}$)			6×10^{-6})

FRONT HALF ACETONE WASH APC 623

Run. No.	4 2 + 3		
Beaker No.	15	16	
Wash vol., ml	150	125	
Gross residue wt.g.	0.0173	0.0143	
Blank wt., g (R.f. x wash vol.)	0.0009	0.0008	
Net wt., g.	0.0164	0.0135	0.0299

CYCLONE FIELD DATA FORM

Company HALLS GIN CO. Date Oct. 27, 1988

Cyclone I. D. # 11

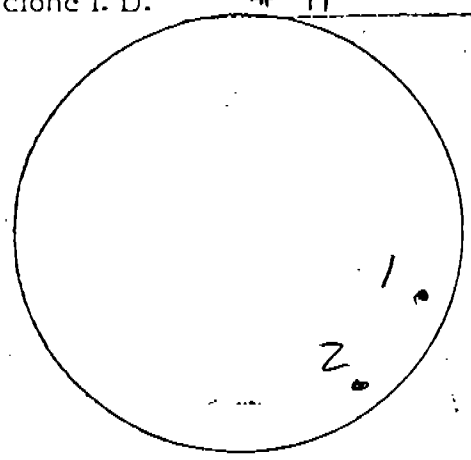

Approximate area of measurable flow and points sampled

point #	ΔP	ΔH
1	1.5	.20
2	1.5	.20

exit dry bulb 84°

exit wet bulb 66°

train # 2

nozzle diameter .937

orifice temp. see below

barometric pressure 29.72

CYCLONE DIMENSIONS: CHECK THE APPROPRIATE EXIT CONFIGURATION

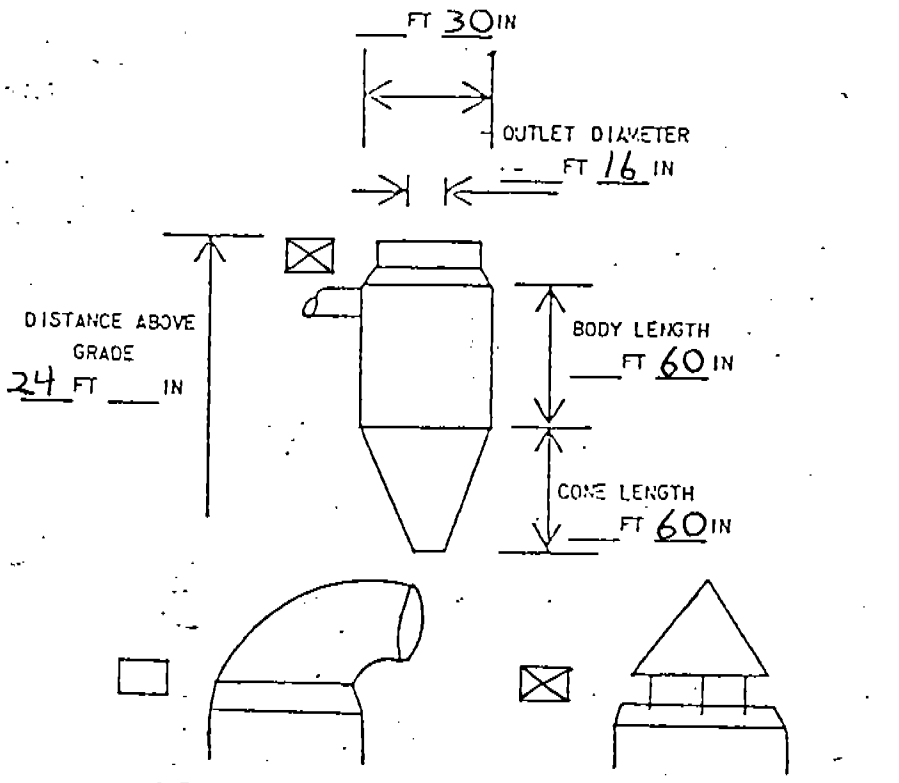

CHECK THE APPROPRIATE INLET CONFIGURATION:

If different from above draw diagram below:

COMMENTS

RUN #	TIME	T_s (°F)	T_o (°F)
1	1300-1315	84°	85°
2	1320-1335	84°	85°
3	1345-1400	84°	85°

CALCULATION OF ACTUAL EMISSIONS

HALLS GIN COMPANY (49-00074)

Source Identification Mote Press Cyclone 11

Test Date Oct. 27, 1988

Q = actual airflow in ft^3/min* 2,500

T_d = dry bulb temperature at exhaust point 84 °F

T_w = wet bulb temperature at exhaust point 66 °F

M = percent moisture in exhaust gases 2.2%

P_{bar} = barometric pressure 29.72

$$Q_{std} = (Q)\left(1 - \frac{M}{100}\right)$$

2,445

Q_{std} in dry standard ft^3/min

* Based on fan data obtained from the designer and builder of the gin. The fan data is at ambient temperature, which is approximately 70° F. Barometric pressures measured during the testing were within one percent of 29.92 in. of Hg. Therefore, the given flows are considered to be at standard conditions.

Company Halls Gin Co. Test Date Oct. 27, 1988

Cyclone I.D. Mote Press Cyclone 11

Page 1 of 3

Point No.	1	2	3	4	5	6
Point ΔP	1.5	1.5				
SR60 = sampling rate through orifice at 60°F (see Note 1 on third page following)	22.849	22.849				
T_o = average temperature of orifice (°F)	85	85				
$SR = \frac{(SR60)(T_o + 460)}{520}$ (SR = Sampling rate in ft/min)	23.948	23.948				
T_p = time per sample point (min)	7.5	7.5				

Run #	1	2	3	Ave.
$SV = (T_p)_1 (SR)_1 + (T_p)_2 (SR)_2 + \ldots$ (SV = total sample volume in ft^3)	359.21	359.21	359.21	
T_t = total sampling time (min.)	15	15	15	
$ASV_{ft^3/min} = \frac{SV}{T_t}$ (ASV = average volume sampled)	23.948	23.948	23.948	
T_E = average temperature of exit (°F)	84	84	84	
M_E = molecular weight of exit gases (weighted averages of molecular weights obtained in inlet ducts)	28.76	28.76	28.76	
P_{bar} = barometric pressure	29.72	29.72	29.72	
C_p = 0.99 (pitot tube coeficient)	0.99	0.99	0.99	
$V_E = (85.48)(C_p)\left[AVE\sqrt{\Delta P_E}\right]\left[\sqrt{\frac{(T_E + 460)}{(M_E)(P_{bar})}}\right]$ (VE = average velocity at sampling points ft/sec)		82.7	82.7	82.7
d_n = diameter of nozzle (in.)	0.937	0.937	0.937	

Company Halls Gin Co. Test Date Oct. 27, 1988

Cyclone I.D. Mote Press Cyclone 11

Run #	1	2	3	Ave.
$A_n = \frac{\pi \times (d_n)^2}{4}$ (An = area of nozzle in.^{2})	0.690	0.690	0.690	
$V_n = \frac{(ASV)(T_E + 460)(2.4)}{(A_n)(T_o + 460)}$ (Vn = average velocity in nozzle ft/sec)	83.1	83.1	83.1	
$P_1 = \frac{(100)(Vn)}{V_E}$ (P1 = percent isokinetic)	100	100	100	
TP = total weight of particulate caught in sampler during a run (g.)	0.4482	0.4208	0.4727	
FW = gain in weight of filter during a run (g.)	0.4370	0.4096	0.4615	
FB = gain in weight of blank filter (to compensate for filter handling) (g.)	−0.0005	−0.0005	−0.0005	
AW = gain in weight from acetone wash of sampler at end of each series of runs (complete test) (g.)	0.0332	0.0332	0.0332	
AB = gain in weight of blank volume of acetone (to compensate for impurities in acetone) (g.)	0.0012	0.0012	0.0012	
N = number of runs in each test over which only a single probe wash occurs	3	3	3	
$TP = FW - FB + \frac{AW - AB}{N}$ (TP = total particulate catch per sample run)	0.4482	0.4208	0.4727	

Company Halls Gin Co. Test Date Oct. 27, 1988

Cyclone I.D. Mote Press Cyclone 11

Run #	1	2	3	Ave.
M_s = percent moisture in exit gases (weighted averages of percent moistures obtained in inlet ducts)	2.2	2.2	2.2	
$QS_{std} = \frac{(SV)\,(17.71)\,(P_{bar})\,(1-\frac{Ms}{100})}{(T_o + 460)}$ (QSstd = total volume sampled at standard conditions ft^3)	339.3	339.3	339.3	
C_s (gr/dscf) = $\frac{(15.43)\,(TP)}{(QS_{std})}$ (Cs = particulate concentration)	0.0204	0.0191	0.0215	0.0203
$PMR_{lb/hr} = (C_s)\,(TQ_{std})\,(0.00857)$ TQ_{std} = (total air into cyclone) (PMR = mass emission rate)	0.43 0.428	0.400	0.451	0.43

(Note 1)

The rate of air flow through the orifice is precalculated for all pressure drops across the orifice using the various nozzles for an orifice temperature of 60°F. This figure is then converted to the actual air flow at the orifice temperature by the equation:

$$SR = \frac{(SR60)\,(T_o = 460)}{520}$$

Where: SR60 = sampling rate through orifice at 60°F
To = average temperature of orifice (°F)

JS/ah/APCHd1

RADER II
MOTE PRESS
CYCLONE 11
~~COTTON WASTE DISPOSAL~~
~~CYCLONE 8B~~
BLANK
10/27/88
HALLS COTTON GIN

Filter No. CC1G91

City & Station

Date Start ____ Mo ____ Day ____ Yr. ____ Hr. Flow Time

Stop ____ Stop ____

Date Stop ____ Mo ____ Day ____ Yr. ____ Hr. Start ____ Start ____

Ave ____ Total ____

Remarks

Wt Sample & Filter 4.4273

Wt Filter 4.4278

Wt Sample -0.0005

Filter Conc.

Initial weighing by WCH DATE 10-11-88

Final weighing by WCH Date 11-8-88

Metals sample taken by ____ Date ____

Microscopic sample taken by ____ Date ____

Sample Custody

1. Collected by ____ Date ____
   Delivered to ____ Date ____
2. Received by ____ Date ____
   Delivered to ____ Date ____
3. Received by ____ Date ____
   Delivered to ____ Date ____
4. Received in laboratory by ____
   Date ____ from ____

PH-2857
LAB 8/88

Cance II
Mote Process
Cyclone II
Run #1
10/27/86
Haus Cotton Gin

Filter No. 001694

City & Station _____

Date Start ___ (Mo) ___ (Day) ___ (Yr) ___ (Hr) Flow Time

Stop _____ Stop _____

Date Stop ___ (Mo) ___ (Day) ___ (Yr) ___ (Hr) Start _____ Start _____

Ave _____ Total _____

Remarks _____

Wt Sample & Filter 4.8294 Initial weighing by

Wt Filter 4.3924 WCH DATE 10-12-88

Wt Sample 0.437 Final weighing by

Filter Conc. _____ WCH Date 11-8-88

Metals sample taken by _____ Date _____

Microscopic sample taken by _____ Date _____

Sample Custody

1. Collected by _____ Date _____

   Delivered to _____ Date _____

2. Received by _____ Date _____

   Delivered to _____ Date _____

3. Received by _____ Date _____

   Delivered to _____ Date _____

4. Received in laboratory by _____

   Date _____ from _____

FII-2857
LAB 8/86

BADGER II
MOTE PRESS
CYCLONE II
Run #2
10/27/88
HALLS COTTON GIN

Filter No. 001696

City & Station

Date Start ___ Mo ___ Day ___ Yr ___ Hr

Flow Time
Stop ___ Stop ___
Start ___ Start ___
Ave ___ Total ___

Date Stop ___ Mo ___ Day ___ Yr ___ Hr

Remarks

Wt Sample & Filter 4.8190

Initial weighing by

Wt Filter 4.4094 WCH DATE 10-12-88

Wt Sample 0.4096

Final weighing by

Filter Conc. WCH Date 11-8-88

Metals sample taken by ___ Date ___

Microscopic sample taken by ___ Date ___

Sample Custody

1. Collected by ___ Date ___

Delivered to ___ Date ___

2. Received by ___ Date ___

Delivered to ___ Date ___

3. Received by ___ Date ___

Delivered to ___ Date ___

4. Received in laboratory by ___

Date ___ from ___

PII-2857
LAB 8/88

243 KADER II
MOTE PREP
CYCLONE II
Run #3
10/27/88
Hallis Cotton

Filter No. 001698

City & Station _____

Date Start _____ Mo _____ Day _____ Yr _____ Hr

Flow Time
Stop _____ Stop _____

Date Stop _____ Mo _____ Day _____ Yr _____ Hr

Start _____ Start _____

Ave _____ Total _____

Remarks _____

Wt Sample & Filter 4.8823

Wt Filter 4.4208

Wt Sample 0.4615

Filter Conc. _____

Initial weighing by
WCH DATE 10-12-88

Final weighing by
WCH Date 11-8-88

Metals sample taken by _____ Date _____

Microscopic sample taken by _____ Date _____

Sample Custody

1. Collected by _____ Date _____

   Delivered to _____ Date _____

2. Received by _____ Date _____

   Delivered to _____ Date _____

3. Received by _____ Date _____

   Delivered to _____ Date _____

4. Received in laboratory by _____

   Date _____ from _____

PH-2857
LAB 8/86

SOURCE SAMPLING PARTICULATE LAB DATA (method 5), Sheet APC 624

Company Halls Cotton Gin (TN) Company No. _____

Process Mote Press Cyclone II Test Date 10-27-88

ACETONE BLANK APC 617

Run No.	_____	_____	_____
Beaker No.	7	8	_____
Acetone Volume, ml.	125	150	275
Beaker + Acetone Residue Wt., g	110.9295	110.0968	_____
Beaker tare weight, g	110.9287	110.0960	_____
Net weight, g	0.0008	0.0008	0.0016 total
Residue factor (R.f.), g/ml ($\frac{\text{net wt.}}{\text{acetone vol.}}$)	_____	_____	6×10^{-6})

FRONT HALF ACETONE WASH APC 624

Run. No.	1, 2 & 3	_____	_____
Beaker No.	17	18	_____
Wash vol., ml	110	100	_____
Gross residue wt.g.	0.0183	0.0149	_____
Blank wt., g (R.f. x wash vol.)	0.0006	0.0006	_____
Net wt., g.	0.0177	0.0143	0.0320 total

CYCLONE FIELD DATA FORM

Company Halls Gin Co. Date Oct. 27, 1988

Cyclone I. D. Battery Condenser Vent

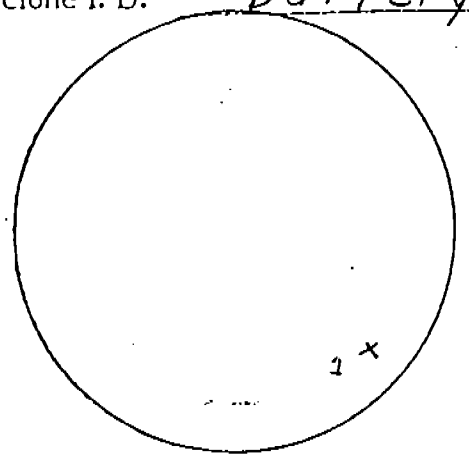

Approximate area of measurable flow and points sampled

point #	ΔP	ΔH
1	0.75	0.17

exit dry bulb 80°F

exit wet bulb 70°F

train # 1

nozzle diameter 1.116

orifice temp. see below

barometric pressure 29.67

CYCLONE DIMENSIONS: CHECK THE APPROPRIATE EXIT CONFIGURATION

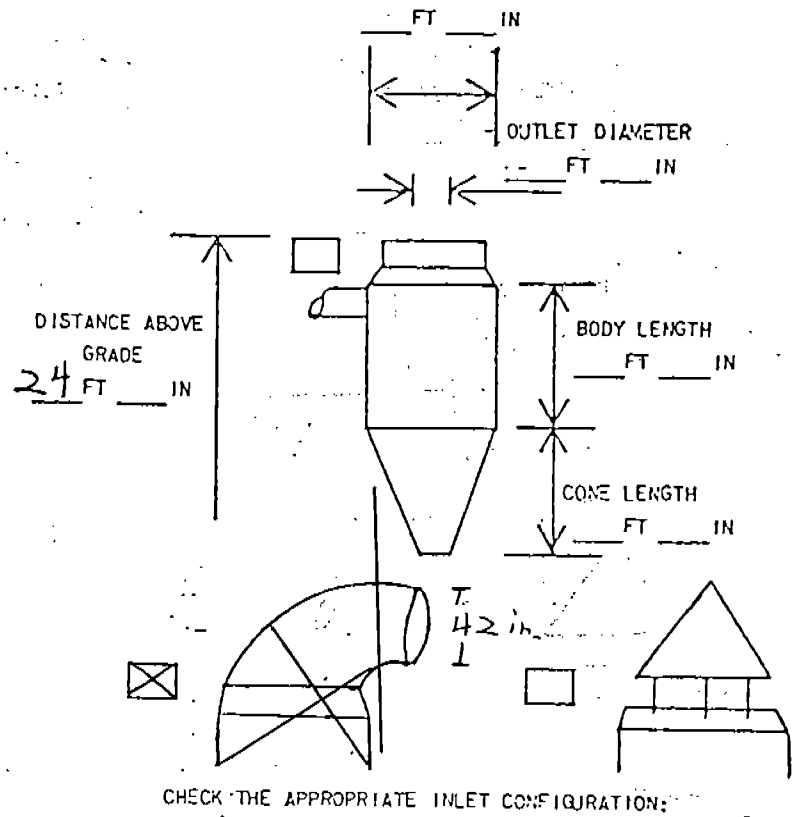

CHECK THE APPROPRIATE INLET CONFIGURATION:

If different from above draw diagram below:

COMMENTS

Run #	Time	T_s (°F)	T_o (°F)
1	2:28-2:43 PM	80	85
2	2:50-3:05 PM	82	85
3	3:11-3:26 PM	82	85

CALCULATION OF ACTUAL EMISSIONS

HALLS GIN COMPANY (49-00074)

Source Identification Battery Condenser Vent

Test Date Oct. 27, 1988

Q = actual airflow in ft^3/min* 3,000

T_d = dry bulb temperature at exhaust point 80°F

T_w = wet bulb temperature at exhaust point 70°F

M = percent moisture in exhaust gases 2.5%

P_{bar} = barometric pressure 29.67

$$Q_{std} = (Q)\left(1 - \frac{M}{100}\right)$$

2,925

Q_{std} in dry standard ft^3/min

* Based on fan data obtained from the designer and builder of the gin. The fan data is at ambient temperature, which is approximately 70° F. Barometric pressures measured during the testing were within one percent of 29.92 in. of Hg. Therefore, the given flows are considered to be at standard conditions.

Company Halls Gin Co. Test Date Oct. 27, 1988

Cyclone I.D. Battery Condenser Vent

Page 1 of 3

Point No.	1	2	3	4	5	6
Point ΔP	0.75					
SR60 = sampling rate through orifice at 60°F (see Note 1 on third page following)	22.919					
T_o = average temperature of orifice (°F)	85					
$SR = \frac{(SR60)(T_o + 460)}{520}$ (SR = Sampling rate in ft/min)	24.021					
T_p = time per sample point (min)	15					

Run #	1	2	3	Ave.
$SV = (T_p)_1 (SR)_1 + (T_p)_2 (SR)_2 + \ldots$ (SV = total sample volume in ft^3)	360.31	360.31	360.31	
T_t = total sampling time (min.)	15	15	15	
$ASV_{ft^3/min} = \frac{SV}{T_t}$ (ASV = average volume sampled)	24.021	24.021	24.021	
T_E = average temperature of exit (°F)	80	82	82	
M_E = molecular weight of exit gases (weighted averages of molecular weights obtained in inlet ducts)	28.72	28.72	28.72	
P_{bar} = barometric pressure	29.67	29.67	29.67	
C_p = 0.99 (pitot tube coeficient)	0.99	0.99	0.99	
$V_E = (85.48)(C_p)\left[AVE\sqrt{\Delta P_E}\right]\left[\sqrt{\frac{(T_E + 460)}{(M_E)(P_{bar})}}\right]$ (VE = average velocity at sampling points ft/sec)		58.3	58.4	58.4
d_n = diameter of nozzle (in.)	1.116	1.116	1.116	

Company Halls Gin Co. Test Date Oct. 27, 1988

Cyclone I.D. Battery Condenser Vent

Run #	1	2	3	Ave.
$A_n = \frac{\pi \times (d_n)^2}{4}$ (An = area of nozzle in.^{2})	0.978	0.978	0.978	
$V_n = \frac{(ASV)(T_E + 460)(2.4)}{(A_n)(T_o + 460)}$ (Vn = average velocity in nozzle ft/sec)	58.4	58.6	58.6	
$P_1 = \frac{(100)(Vn)}{V_E}$ (P1 = percent isokinetic)	100	100	100	
TP = total weight of particulate caught in sampler during a run (g.)	0.2349	0.1611	0.1660	
FW = gain in weight of filter during a run (g.)	0.2153	0.1415	0.1464	
FB = gain in weight of blank filter (to compensate for filter handling) (g.)	-0.0072	-0.0072	-0.0072	
AW = gain in weight from acetone wash of sampler at end of each series of runs (complete test) (g.)	0.0387	0.0387	0.0387	
AB = gain in weight of blank volume of acetone (to compensate for impurities in acetone) (g.)	0.0015	0.0015	0.0015	
N = number of runs in each test over which only a single probe wash occurs	3	3	3	
$TP = FW - FB + \frac{AW - AB}{N}$ (TP = total particulate catch per sample run)	0.2349	0.1611	0.1660	

Company Hollis Gin Co. Test Date Oct. 27, 1988

Cyclone I.D. Battery Condenser Vent

Run #	1	2	3	Ave.
M_s = percent moisture in exit gases (weighted averages of percent moistures obtained in inlet ducts)	2.5	2.5	2.5	
$QS_{std} = \frac{(SV)(17.71)(P_{bar})(1-\frac{Ms}{100})}{(T_o + 460)}$ (QSstd = total volume sampled at standard conditions ft^3)	338.7	338.7	338.7	
C_s (gr/dscf) = $\frac{(15.43)(TP)}{(QS_{std})}$ (Cs = particulate concentration)	0.0107	0.0073	0.0076	0.0085
$PMR_{lb/hr} = (C_s)(TQ_{std})(0.00857)$ TQ_{std} = (total air into cyclone) (PMR = mass emission rate)	0.27 0.268	0.183	0.191	0.21

(Note 1)

The rate of air flow through the orifice is precalculated for all pressure drops across the orifice using the various nozzles for an orifice temperature of 60°F. This figure is then converted to the actual air flow at the orifice temperature by the equation:

$$SR = \frac{(SR60)(T_o = 460)}{520}$$

Where: SR60 = sampling rate through orifice at 60°F
To = average temperature of orifice (°F)

JS/ah/APCHd1

RADEX I
BATTERY CONDENSER VENT
BLANK
10/27/88
IDAHO COTTON GIN

Filter No. 001699

City & Station

Date Start Mo Day Yr Hr

Date Stop Mo Day Yr Hr

Flow Time
Stop Stop
Start Start
Ave Total

Remarks

Wt Sample & Filter 4.4156 4.4172 11-9-88

Wt Filter 4.4228

Wt Sample -0.0072

Filter Conc.

Metals sample taken by Date

Microscopic sample taken by Date

Initial weighing by
WCH DATE 10-12-88

Final weighing by
WCH Date 11-8-88

Sample Custody

1. Collected by Date
   Delivered to Date
2. Received by Date
   Delivered to Date
3. Received by Date
   Delivered to Date
4. Received in laboratory by
   Date from

PH-2857
LAB 8/88

RADEX I
BATTERY/CONDENSER VENT
RUN #1
10/27/88
KLAUS COTTON GIN

Filter No. 001700

City & Station

Date Start ___ Mo ___ Day ___ Yr ___ Hr

Date Stop ___ Mo ___ Day ___ Yr ___ Hr

Flow Time
Stop ___ Stop ___
Start ___ Start ___
Ave ___ Total ___

Remarks

Wt Sample & Filter 4.6100

Wt Filter 4.3947

Wt Sample 0.2153

Filter Conc.

Initial weighing by
WCH DATE 10-12-88

Final weighing by
WCH Date 11-8-88

Metals sample taken by ___ Date ___

Microscopic sample taken by ___ Date ___

Sample Custody

1. Collected by ___ Date ___
   Delivered to ___ Date ___
2. Received by ___ Date ___
   Delivered to ___ Date ___
3. Received by ___ Date ___
   Delivered to ___
4. Received in laboratory by ___
   Date ___ from ___

PH-2657
LAB 8/88

RADER I
BATTERY CONDENSER
VENT
RUN #2
10/27/88
HAUS COTTON GW

Filter No. 001704

City & Station _____

Date Start ___ Mo ___ Day ___ Yr ___ Hr

Date Stop ___ Mo ___ Day ___ Yr ___ Hr

Flow Time
Stop _____ Stop _____
Start _____ Start _____
Ave _____ Total _____

Remarks _____

Wt Sample & Filter 4.5013

Wt Filter 4.3598

Wt Sample 0.1415

Filter Conc. _____

Initial weighing by
WCH DATE 10-12-88

Final weighing by
WCH Date 11-8-88

Metals sample taken by _____ Date _____

Microscopic sample taken by _____ Date _____

Sample Custody

1. Collected by _____ Date _____
   Delivered to _____ Date _____
2. Received by _____ Date _____
   Delivered to _____ Date _____
3. Received by _____ Date _____
   Delivered to _____
4. Received in laboratory by _____
   Date _____ from _____

PH-2857
LAB 8/86

Room I
Battery Compressor
Vent
Run #3
10/07/88
Hi Vol Cotton Bin

001706

Filter No. _____

City & Station _____

Date Start ____ Mo ____ Day ____ Yr ____ Hr Flow Time

Stop _____ Stop _____

Date Stop ____ Mo ____ Day ____ Yr ____ Hr Start _____ Start _____

Ave _____ Total _____

Remarks _____

Wt Sample & Filter 4.5289

Wt Filter 4.3825

Wt Sample 0.1464

Filter Conc. _____

Initial weighing by WCH DATE 10-12-88

Final weighing by WCH Date 11-8-88

Metals sample taken by _____ Date _____

Microscopic sample taken by _____ Date _____

Sample Custody

1. Collected by _____ Date _____

Delivered to _____ Date _____

2. Received by _____ Date _____

Delivered to _____ Date _____

3. Received by _____ Date _____

Delivered to _____ Date _____

4. Received in laboratory by _____

Date _____ from _____

PH-2857
LAB 8/88

SOURCE SAMPLING PARTICULATE LAB DATA (method 5), Sheet APC 625

Company Halls, TN Cotton Gin | Company No. _____

Process Battery Condenser Vent BCV | Test Date 10-27-88

ACETONE BLANK APC 617

Run No.			
Beaker No.	7	8	
Acetone Volume, ml.	125	150	275
Beaker + Acetone Residue Wt., g	110.9295	110.0968	
Beaker tare weight, g	110.9287	110.0960	
Net weight, g	0.0008	0.0008	0.0016 total
Residue factor (R.f.), g/ml ($\frac{\text{net wt.}}{\text{acetone vol.}}$)			($\times 10^{-6}$)

FRONT HALF ACETONE WASH APC 625

Run. No.	1,2 + 3		
Beaker No.	19	20	
Wash vol., ml	100	150	
Gross residue wt.g.	0.0153	0.0234	
Blank wt., g (R.f. x wash vol.)	0.0006	0.0009	
Net wt., g.	0.0147	0.0225	0.0372 total

CYCLONE FIELD DATA FORM

Company Halls Gin Co. Date Oct. 27, 1988

Cyclone I. D. Gin Stand 1B (Moss)

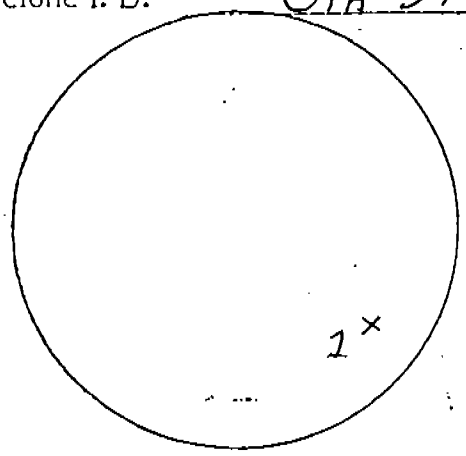

Approximate area of measurable flow and points sampled

point #	ΔP	ΔH
1	0.6	0.142

exit dry bulb 54 °F

exit wet bulb 50 °F

train # 1

nozzle diameter 1.116

orifice temp. see below

barometric pressure 29.74

CYCLONE DIMENSIONS: CHECK THE APPROPRIATE EXIT CONFIGURATION

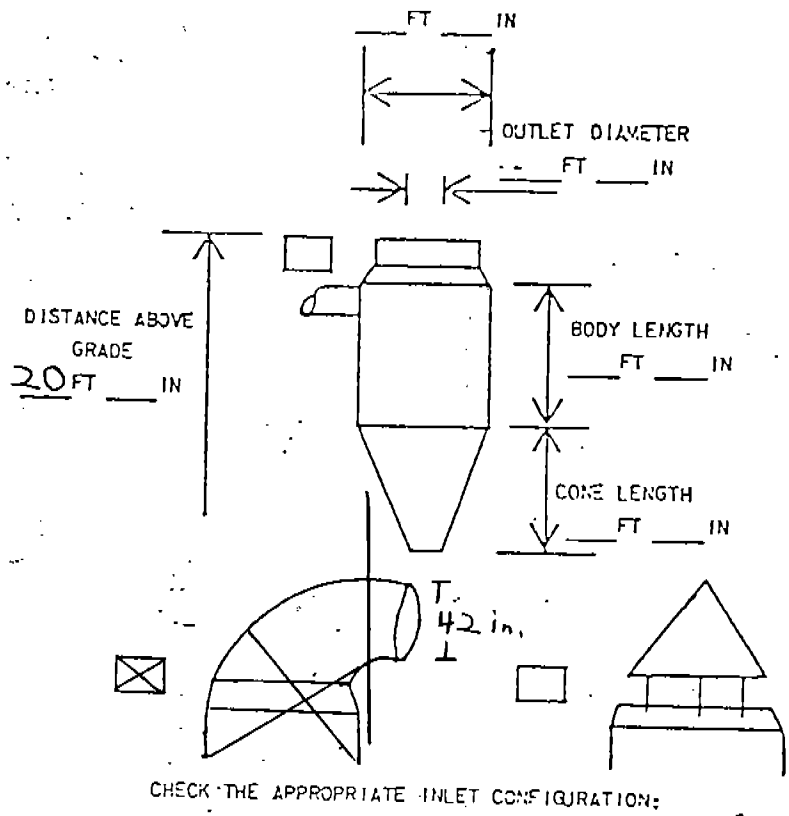

CHECK THE APPROPRIATE INLET CONFIGURATION:

If different from above draw diagram below:

COMMENTS	Run #	Time	T_s (°F)	T_o (°F)
	1	8:44–8:59 AM	54	55
	2	9:05–9:20 AM	54	60
	3	9:30–9:45 AM	54	60

CALCULATION OF ACTUAL EMISSIONS

HALLS GIN COMPANY (49-00074)

Source Identification Gin Stand 1B (Moss)

Test Date Oct. 27, 1988

Q = actual airflow in ft^3/min* 2,100

T_d = dry bulb temperature at exhaust point 54°F

T_w = wet bulb temperature at exhaust point 50°F

M = percent moisture in exhaust gases 1.2%

P_{bar} = barometric pressure 29.74

$$Q_{std} = (Q)\ (1 - \frac{M}{100})$$

2,075

Q_{std} in dry standard ft^3/min

* Based on fan data obtained from the designer and builder of the gin. The fan data is at ambient temperature, which is approximately 70^0 F. Barometric pressures measured during the testing were within one percent of 29.92 in. of Hg. Therefore, the given flows are considered to be at standard conditions.

Company Halls Gin Co. Test Date Oct. 27, 1988

Cyclone I.D. Gin Stand 1B (Moss)

Point No.	1 Run 1	2	1 Runs 2&3	4	5	6
Point ΔP	0.6		0.6			
SR60 = sampling rate through orifice at 60°F (see Note 1 on third page following)	21.094		21.094			
T_o = average temperature of orifice (°F)	55		60			
$SR = \frac{(SR60)(T_o + 460)}{520}$ (SR = Sampling rate in ft/min)	20.891		21.094			
T_p = time per sample point (min)	15		15			

Run #	1	2	3	Ave.
$SV = (T_p)_1 (SR)_1 + (T_p)_2 (SR)_2 + \ldots$ (SV = total sample volume in ft^3)	313.4	316.4	316.4	
T_t = total sampling time (min.)	15	15	15	
$ASV_{ft^3/min} = \frac{SV}{T_t}$ (ASV = average volume sampled)	20.891	21.094	21.094	
T_E = average temperature of exit (°F)	54	54	54	
M_E = molecular weight of exit gases (weighted averages of molecular weights obtained in inlet ducts)	28.87	28.87	28.87	
P_{bar} = barometric pressure	29.74	29.74	29.74	
C_p = 0.99 (pitot tube coeficient)	0.99	0.99	0.99	
$V_E = (85.48)(C_p)\left[AVE\sqrt{\Delta P_E}\right]\left[\sqrt{\frac{(T_E + 460)}{(M_E)(P_{bar})}}\right]$ (VE = average velocity at sampling points ft/sec)	50.7	50.7	50.7	
d_n = diameter of nozzle (in.)	1.116	1.116	1.116	

Company Halls Gin Co. Test Date Oct. 27, 1988

Cyclone I.D. Gin Stand 1B (Moss)

Run #	1	2	3	Ave.
$A_n = \frac{\pi \times (d_n)^2}{4}$ (An = area of nozzle in.^{2})	0.978	0.978	0.978	
$V_n = \frac{(ASV)(T_E + 460)(2.4)}{(A_n)(T_o + 460)}$ (Vn = average velocity in nozzle ft/sec)	51.2	51.2	51.2	
$P_1 = \frac{(100)(Vn)}{V_E}$ (P1 = percent isokinetic)	101	101	101	
TP = total weight of particulate caught in sampler during a run (g.)	0.1420	0.1597	0.1762	
FW = gain in weight of filter during a run (g.)	0.1261	0.1438	0.1603	
FB = gain in weight of blank filter (to compensate for filter handling) (g.)	-0.0004	-0.0004	-0.0004	
AW = gain in weight from acetone wash of sampler at end of each series of runs (complete test) (g.)	0.0489	0.0489	0.0489	
AB = gain in weight of blank volume of acetone (to compensate for impurities in acetone) (g.)	0.0023	0.0023	0.0023	
N = number of runs in each test over which only a single probe wash occurs	3	3	3	
$TP = FW - FB + \frac{AW - AB}{N}$ (TP = total particulate catch per sample run)	0.1420	0.1597	0.1762	

Company Halls Gin Co. Test Date Oct. 27, 1988

Cyclone I.D. Gin Stand 1B (Moss)

Run #	1	2	3	Ave.
M_s = percent moisture in exit gases (weighted averages of percent moistures obtained in inlet ducts)	1.2	1.2	1.2	
$QS_{std} = \frac{(SV)\ (17.71)\ (P_{bar})\ (1-\frac{Ms}{100})}{(T_o + 460)}$ (QSstd = total volume sampled at standard conditions ft^3)	316.7	316.6	316.6	
C_s (gr/dscf) $= \frac{(15.43)\ (TP)}{(QS_{std})}$ (Cs = particulate concentration)	0.0069	0.0078	0.0086	0.0078
$PMR_{lb/hr} = (C_s)\ (TQ_{std})\ (0.00857)$ TQ_{std} = (total air into cyclone) (PMR = mass emission rate)	0.122	0.14	0.153	0.14

(Note 1)

The rate of air flow through the orifice is precalculated for all pressure drops across the orifice using the various nozzles for an orifice temperature of 60°F. This figure is then converted to the actual air flow at the orifice temperature by the equation:

$$SR = \frac{(SR60)\ (T_o = 460)}{520}$$

Where: SR60 = sampling rate through orifice at 60°F
To = average temperature of orifice (°F)

JS/ah/APCHd1

RADER I
GIN STAND 1B
(MOSS)
BLANK
10/27/88
Hales Cotton Gin

Filter No. 001670

City & Station

Date Start Mo Day Yr Hr

Flow Time
Stop Stop
Start Start
Ave Total

Date Stop Mo Day Yr Hr

Remarks

Wt Sample & Filter WCH ~~4.3158~~ 4.2927

Wt Filter 4.2931

Wt Sample -0.004

Filter Conc.

Initial weighing by WCH DATE 10-11-88

Final weighing by WCH Date 11-8-88

Metals sample taken by Date

Microscopic sample taken by Date

Sample Custody

1. Collected by Date
   Delivered to Date
2. Received by Date
   Delivered to Date
3. Received by Date
   Delivered to Date
4. Received in laboratory by
   Date from

PII-2857
LAB 8/88

Radar I
Gin Stand 1B
(Moss)
Run #1
10/27/88
Hales Corona Gin

Filter No. C01671

City & Station

Date Start ____ Mo ____ Day ____ Yr ____ Hr

Flow Time
Stop ____ Stop ____

Date Stop ____ Mo ____ Day ____ Yr ____ Hr

Start ____ Start ____

Ave ____ Total ____

Remarks

Wt Sample & Filter 4.4648

Wt Filter 4.3387

Wt Sample 0.1261

Filter Conc.

Initial weighing by WCH DATE 10-11-88

Final weighing by WCH Date 11-8-88

Metals sample taken by ____ Date ____

Microscopic sample taken by ____ Date ____

Sample Custody

1. Collected by ____ Date ____
   Delivered to ____ Date ____
2. Received by ____ Date ____
   Delivered to ____ Date ____
3. Received by ____ Date ____
   Delivered to ____ Date ____
4. Received in laboratory by ____
   Date ____ from ____

PH-2857
LAB 8/86

Rider I
GW Stand 1B
(Moss)
Run #2
10/27/88
Hills Cotton Gin

Filter No. C01675

City & Station

Date Start ____ Mo ____ Day ____ Yr ____ Hr

Flow Time
Stop ____ Stop ____

Date Stop ____ Mo ____ Day ____ Yr ____ Hr

Start ____ Start ____

Ave ____ Total ____

Remarks

Wt Sample & Filter 4.6041

Wt Filter 4.4603

Wt Sample 0.1438

Filter Conc.

Initial weighing by WCH DATE 10-11-88

Final weighing by WCH Date 11-8-88

Metals sample taken by ____ Date ____

Microscopic sample taken by ____ Date ____

Sample Custody

1. Collected by ____ Date ____
   Delivered to ____ Date ____
2. Received by ____ Date ____
   Delivered to ____ Date ____
3. Received by ____ Date ____
   Delivered to ____ Date ____
4. Received in laboratory by ____
   Date ____ from ____

PH-2857
LAB 8/86

Rader I
Gin Stand 1B
(Mess)
Run #3
10/27/88
Hills Cotton Gin

Filter No. 001079

City & Station

Date Start ____ Mo ____ Day ____ Yr ____ Hr

Flow Time
Stop ____ Stop ____

Date Stop ____ Mo ____ Day ____ Yr ____ Hr

Start ____ Start ____

Ave ____ Total ____

Remarks

Wt Sample & Filter 4.6323 4.6344 11-9-88

Wt Filter 4.4720

Wt Sample 0.1603

Filter Conc.

Initial weighing by WCH DATE 10-11-88

Final weighing by WCH Date 11-8-88

Metals sample taken by ____ Date ____

Microscopic sample taken by ____ Date ____

Sample Custody

1. Collected by ____ Date ____
   Delivered to ____ Date ____
2. Received by ____ Date ____
   Delivered to ____ Date ____
3. Received by ____ Date ____
   Delivered to ____ Date ____
4. Received in laboratory by ____
   Date ____ from ____

PH-2857
LAB 8/88

SOURCE SAMPLING PARTICULATE LAB DATA (method 5), Sheet APC 621

Company Halls, TN Cotton Gin | Company No. _____

Process Gin Stand 1B Moss | Test Date 10-27-88

ACETONE BLANK APC 617

Run No.			
Beaker No.	7	8	275 total
Acetone Volume, ml.	125	150	
Beaker + Acetone Residue Wt., g	110.9295	110.0968	
Beaker tare weight, g	110.9287	110.0960	
Net weight, g	0.0008	0.0008	0.0016 total
Residue factor (R.f.), g/ml ($\frac{\text{net wt.}}{\text{acetone vol.}}$)			6×10^{-6})

FRONT HALF ACETONE WASH APC 621

Run. No.	1, 2 + 3		
Beaker No.	11	12	
Wash vol., ml	200	200	
Gross residue wt.g.	0.0239	0.0250	
Blank wt., g (R.f. x wash vol.)	0.0012	0.0012	
Net wt., g.	0.0227	0.0238	0.0465 total

CYCLONE FIELD DATA FORM

Company Halls Gin Co. Date Oct. 27, 1988

Cyclone I. D. Gin Stand 1A (16D)

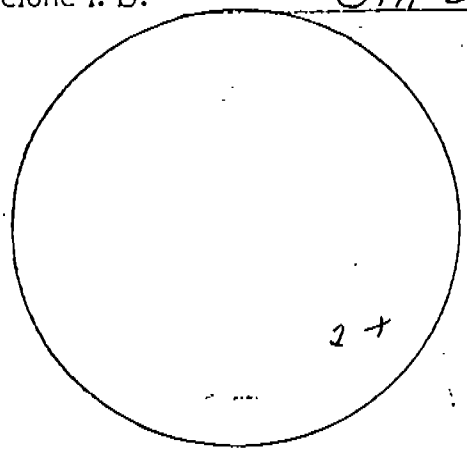

Approximate area of measurable flow and points sampled

point #	ΔP	ΔH
1	0.5	0.115

exit dry bulb 64°F

exit wet bulb 58 F

train # 1

nozzle diameter 1.116

orifice temp. see below

barometric pressure 29.77

CYCLONE DIMENSIONS: CHECK THE APPROPRIATE EXIT CONFIGURATION

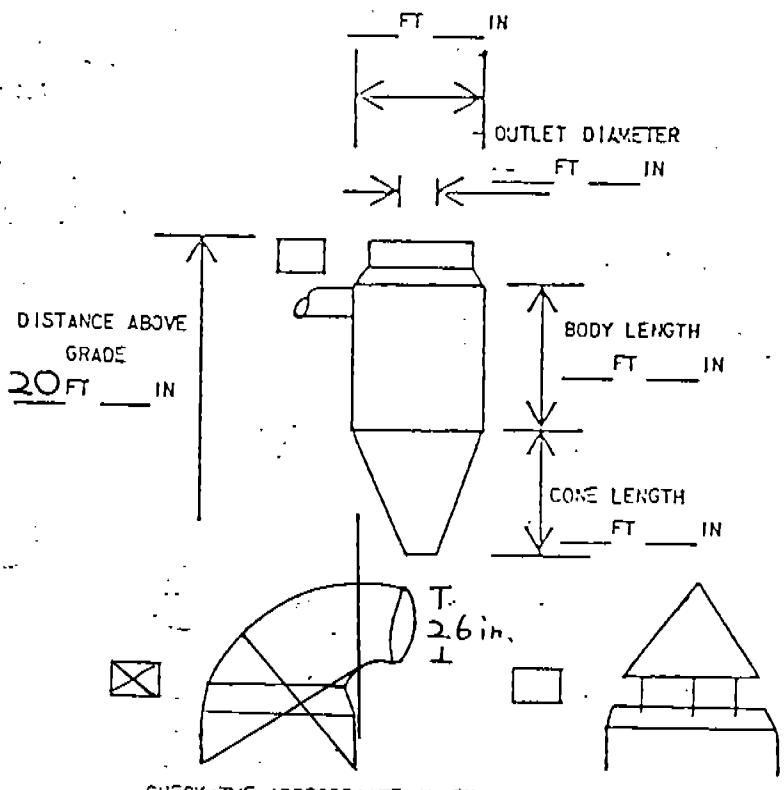

CHECK THE APPROPRIATE INLET CONFIGURATION:

If different from above draw diagram below:

COMMENTS	Run #	Time	Ts (°F)	To (°F)
	1	10:10 - 10:25 AM	64	65
	2	11:41 - 11:56 AM	66	70
	3	12:00 - 12:15 PM	66	70

CALCULATION OF ACTUAL EMISSIONS

HALLS GIN COMPANY (49-00074)

Source Identification Gin Stand 1A (16D)

Test Date Oct. 27, 1988

Q = actual airflow in ft^3/min* 2831

T_d = dry bulb temperature at exhaust point 64 °F

T_w = wet bulb temperature at exhaust point 58 °F

M = percent moisture in exhaust gases 1.7%

P_{bar} = barometric pressure 29.77

$$Q_{std} = (Q)\ (1 - \frac{M}{100})$$

2783

Q_{std} in dry standard ft^3/min

* Based on fan data obtained from the designer and builder of the gin. The fan data is at ambient temperature, which is approximately 70° F. Barometric pressures measured during the testing were within one percent of 29.92 in. of Hg. Therefore, the given flows are considered to be at standard conditions.

Company Halls Gin Co. Test Date Oct. 27, 1988

Cyclone I.D. Gin Stand 1A (16D)

Page 1 of 3

Point No.	1 run 1	2	1 3 runs 2 & 3	4	5	6
Point ΔP	0.5		0.5			
SR60 = sampling rate through orifice at 60°F (see Note 1 on third page following)	19.070		19.070			
T_o = average temperature of orifice (°F)	65		70			
$SR = \frac{(SR60)(T_o + 460)}{520}$ (SR = Sampling rate in ft/min)	19.253		19.437			
T_p = time per sample point (min)	15		15			

Run #	1	2	3	Ave.
$SV = (T_p)_1 (SR)_1 + (T_p)_2 (SR)_2 + \ldots$ (SV = total sample volume in ft^3)	288.8	291.6	291.6	
T_t = total sampling time (min.)	15	15	15	
$ASV_{ft^3/min} = \frac{SV}{T_t}$ (ASV = average volume sampled)	19.253	19.437	19.437	
T_E = average temperature of exit (°F)	64	66	66	
M_E = molecular weight of exit gases (weighted averages of molecular weights obtained in inlet ducts)	28.81	28.81	28.81	
P_{bar} = barometric pressure	29.77	29.77	29.77	
C_p = 0.99 (pitot tube coeficient)	0.99	0.99	0.99	
$V_E = (85.48)(C_p)\left[AVE\sqrt{\Delta P_E}\right]\left[\sqrt{\frac{(T_E + 460)}{(M_E)(P_{bar})}}\right]$ (VE = average velocity at sampling points ft/sec)	46.8	46.9	46.9	
d_n = diameter of nozzle (in.)	1.116	1.116	1.116	

Company Halls Gin Co. Test Date Oct. 27, 1988

Cyclone I.D. Gin Stand 1A (16D)

Run #	1	2	3	Ave.
$A_n = \frac{\pi \times (d_n)^2}{4}$ (An = area of nozzle in.^{2})	0.978	0.978	0.978	
$V_n = \frac{(ASV)(T_E + 460)(2.4)}{(A_n)(T_o + 460)}$ (Vn = average velocity in nozzle ft/sec)	47.2	47.3	47.3	
$P_1 = \frac{(100)(Vn)}{V_E}$ (P1 = percent isokinetic)	101	101	101	
TP = total weight of particulate caught in sampler during a run (g.)	1.4022	1.3016	1.7620	
FW = gain in weight of filter during a run (g.)	1.3696	1.2690	1.7294	
FB = gain in weight of blank filter (to compensate for filter handling) (g.)	-0.0035	-0.0035	-0.0035	
AW = gain in weight from acetone wash of sampler at end of each series of runs (complete test) (g.)	0.0889	0.0889	0.0889	
AB = gain in weight of blank volume of acetone (to compensate for impurities in acetone) (g.)	0.0015	0.0015	0.0015	
N = number of runs in each test over which only a single probe wash occurs	3	3	3	
$TP = FW - FB + \frac{AW - AB}{N}$ (TP = total particulate catch per sample run)	1.4022	1.3016	1.7620	

Company Halls Gin Co. Test Date Oct. 27, 1988

Cyclone I.D. Gin Stand 1A (16D)
Page 3 of 3

Run #	1	2	3	Ave.
M_S = percent moisture in exit gases (weighted averages of percent moistures obtained in inlet ducts)	1.7	1.7	1.7	
$QS_{std} = \frac{(SV)\ (17.71)\ (P_{bar})\ (1 - \frac{Ms}{100})}{(T_o + 460)}$ (QSstd = total volume sampled at standard conditions ft^3)	285.1	285.1	285.1	
C_s (gr/dscf) $= \frac{(15.43)\ (TP)}{(QS_{std})}$ (Cs = particulate concentration)	0.0759	0.0704	0.0954	0.0806
$PMR_{lb/hr} = (C_s)\ (TQ_{std})\ (0.00857)$ TQ_{std} = (total air into cyclone) (PMR = mass emission rate)	1.81	1.68	2.27	1.92

(Note 1)

The rate of air flow through the orifice is precalculated for all pressure drops across the orifice using the various nozzles for an orifice temperature of 60°F. This figure is then converted to the actual air flow at the orifice temperature by the equation:

$$SR = \frac{(SR60)\ (T_o = 460)}{520}$$

Where: SR60 = sampling rate through orifice at 60°F
To = average temperature of orifice (°F)

JS/ah/APCHd1

Radex I
Gin Stand 1A
(160)
Blank
10/27/88
Hales Cotton Gin

Filter No. 001080

City & Station

Date Start ____ Mo ____ Day ____ Yr ____ Hr

Flow Time
Stop ____ Stop ____

Date Stop ____ Mo ____ Day ____ Yr ____ Hr

Start ____ Start ____

Ave ____ Total ____

Remarks

Wt Sample & Filter 4.4685

Wt Filter 4.4720

Wt Sample ~~0.0062~~ -0.0035

Filter Conc.

Initial weighing by WCH DATE 10-11-88

Final weighing by WCH Date 11-8-88

Metals sample taken by ____ Date ____

Microscopic sample taken by ____ Date ____

Sample Custody

1. Collected by ____ Date ____
   Delivered to ____ Date ____
2. Received by ____ Date ____
   Delivered to ____ Date ____
3. Received by ____ Date ____
   Delivered to ____ Date ____
4. Received in laboratory by ____
   Date ____ from ____

PH-2857
LAB 8/88

RADER I
GIN STAND 1A
(16 D)
Run #1
10/27/88
Hills Cotton Gin

Filter No. 001681

City & Station

Date Start ____ Mo ____ Day ____ Yr ____ Hr

Flow Time
Stop ____ Stop ____

Date Stop ____ Mo ____ Day ____ Yr ____ Hr

Start ____ Start ____

Ave ____ Total ____

Remarks

Wt Sample & Filter 5.8681

Wt Filter 4.4385

Wt Sample 1.3696

Filter Conc.

Initial weighing by WCH DATE 10-11-88

Final weighing by WCH Date 11/8/88

Metals sample taken by ____ Date ____

Microscopic sample taken by ____ Date ____

Sample Custody

1. Collected by ____ Date ____
   Delivered to ____ Date ____
2. Received by ____ Date ____
   Delivered to ____ Date ____
3. Received by ____ Date ____
   Delivered to ____ Date ____
4. Received in laboratory by ____
   Date ____ from ____

PH-2657
LAB 8/86

RUDER I
GIN STAND 1A
(160)
RUN #2
10/27/88
HALLS COTTON GIN

Filter No. 001688

City & Station

Date Start ___ Mo ___ Day ___ Yr ___ Hr ___ Flow Time

Stop ___ Stop ___

Date Stop ___ Mo ___ Day ___ Yr ___ Hr ___ Start ___ Start ___

Ave ___ Total ___

Remarks

Wt Sample & Filter 5.7121 5.7243 4K7 11-9-88

Wt Filter 4.4431

Wt Sample 1.269

Filter Conc.

Initial weighing by WCH DATE 10-11-88

Final weighing by WCH Date 11-8-88

Metals sample taken by ___ Date ___

Microscopic sample taken by ___ Date ___

Sample Custody

1. Collected by ___ Date ___

Delivered to ___ Date ___

2. Received by ___ Date ___

Delivered to ___ Date ___

3. Received by ___ Date ___

Delivered to ___ Date ___

4. Received in laboratory by ___

Date ___ from ___

PH-2657
LAB 8/88

RADER I
6IN STAND 1A
(16D)
RUN #3
10/27/88
HALLS COTTON GIN

Filter No. 001693

City & Station

Date Start ____ Mo ____ Day ____ Yr ____ Hr

Flow Time
Stop ____ Stop ____

Date Stop ____ Mo ____ Day ____ Yr ____ Hr

Start ____ Start ____

Ave ____ Total ____

Remarks

Wt Sample & Filter 6.2041

Wt Filter 4.4747

Wt Sample 1.7294

Filter Conc.

Initial weighing by WCH DATE 10-11-88

Final weighing by WCH Date 11-8-88

Metals sample taken by ____ Date ____

Microscopic sample taken by ____ Date ____

Sample Custody

1. Collected by ____ Date ____
   Delivered to ____ Date ____
2. Received by ____ Date ____
   Delivered to ____ Date ____
3. Received by ____ Date ____
   Delivered to ____ Date ____
4. Received in laboratory by ____
   Date ____ from ____

PH-2857
LAB 8/88

SOURCE SAMPLING PARTICULATE LAB DATA (method 5), Sheet APC 620

Company Halls, TN Cotton Gin | Company No. _____

Process Gin Stand 1A (16D) | Test Date 10-27-88

ACETONE BLANK APC 617

Run No.	_____	_____	_____
Beaker No.	7	8	_____
Acetone Volume, ml.	125	150	275
Beaker + Acetone Residue Wt., g	110.9295	110.0968	_____
Beaker tare weight, g	110.9287	110.0960	_____
Net weight, g	0.0008	0.0008	0.0016 total
Residue factor (R.f.), g/ml ($\frac{\text{net wt.}}{\text{acetone vol.}}$)	_____	_____	6×10^{-6})

FRONT HALF ACETONE WASH APC 620

Run. No.	~~427~~ 3	_____	_____
Beaker No.	1	2	_____
Wash vol., ml	150	100	_____
Gross residue wt.g.	0.0486	0.0403	_____
Blank wt., g (R.f. x wash vol.)	0.0009	0.0006	_____
Net wt., g.	0.0477	0.0397	0.0874 total

CYCLONE FIELD DATA FORM

Company Halls Gin Co. Date Oct. 26, 1988

Cyclone I. D. Gin Stand 2B (Moss)

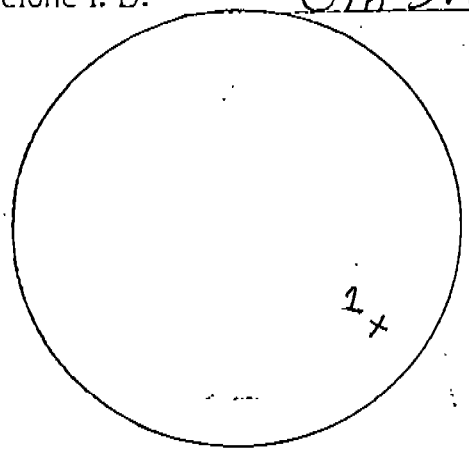

Approximate area of measurable flow and points sampled

point #	ΔP	ΔH
1	0.75	0.173

exit dry bulb 70°F

exit wet bulb 62°F

train # 1

nozzle diameter 1,116

orifice temp. see below

barometric pressure 29.81

CYCLONE DIMENSIONS: CHECK THE APPROPRIATE EXIT CONFIGURATION

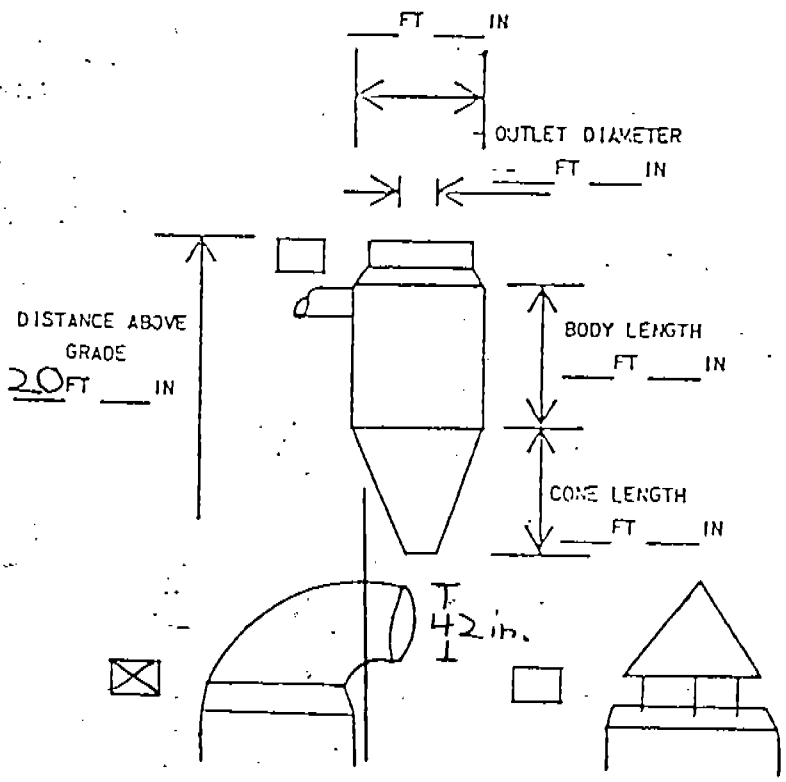

CHECK THE APPROPRIATE INLET CONFIGURATION:

If different from above draw diagram below:

COMMENTS	Run #	Time	T_s (°F)	T_o (°F)
	1	3:10-3:25 PM	70	75
	2	3:32-3:47 PM	70	75
	3	4:52-5:07 PM	70	75

CALCULATION OF ACTUAL EMISSIONS

HALLS GIN COMPANY (49-00074)

Source Identification Gin Stand 2B (Moss)

Test Date Oct. 26, 1988

Q = actual airflow in ft^3/min* 2,100

T_d = dry bulb temperature at exhaust point 70 °F

T_w = wet bulb temperature at exhaust point 62 °F

M = percent moisture in exhaust gases 1.9%

P_{bar} = barometric pressure 29.81

$$Q_{std} = (Q)\ (1 - \frac{M}{100})$$

2,060

Q_{std} in dry standard ft^3/min

* Based on fan data obtained from the designer and builder of the gin. The fan data is at ambient temperature, which is approximately 70° F. Barometric pressures measured during the testing were within one percent of 29.92 in. of Hg. Therefore, the given flows are considered to be at standard conditions.

Company Halls Gin Co. Test Date Oct. 26, 1988

Cyclone I.D. Gin Stand 2B (Moss)

Page 1 of 3

Point No.	1	2	3	4	5	6
Point ΔP	0.75					
SR60 = sampling rate through orifice at 60°F (see Note 1 on third page following)	23.134					
T_o = average temperature of orifice (°F)	75					
$SR = \frac{(SR60)(T_o + 460)}{520}$ (SR = Sampling rate in ft/min)	23.801					
T_p = time per sample point (min)	15					

Run #	1	2	3	Ave.
$SV = (T_p)_1 (SR)_1 + (T_p)_2 (SR)_2 + \ldots$ (SV = total sample volume in ft^3)	357.02	357.02	357.02	
T_t = total sampling time (min.)	15	15	15	
$ASV_{ft^3/min} = \frac{SV}{T_t}$ (ASV = average volume sampled)	23.801	23.801	23.801	
T_E = average temperature of exit (°F)	70	70	70	
M_E = molecular weight of exit gases (weighted averages of molecular weights obtained in inlet ducts)	28.79	28.79	28.79	
P_{bar} = barometric pressure	29.81	29.81	29.81	
C_p = 0.99 (pitot tube coeficient)	0.99	0.99	0.99	
$V_E = (85.48)(C_p)\left[\text{AVE}\sqrt{\Delta P_E}\right]\left[\sqrt{\frac{(T_E + 460)}{(M_E)(P_{bar})}}\right]$ (VE = average velocity at sampling points ft/sec)	57.6	57.6	57.6	
d_n = diameter of nozzle (in.)	1.116	1.116	1.116	

Company Halls Gin Co. Test Date Oct. 26, 1988

Cyclone I.D. Gin Stand 2B (Moss)

Run #	1	2	3	Ave.
$A_n = \frac{\pi \times (d_n)^2}{4}$ (An = area of nozzle in.^{2})	0.978	0.978	0.978	
$V_n = \frac{(ASV)(T_E + 460)(2.4)}{(A_n)(T_o + 460)}$ (Vn = average velocity in nozzle ft/sec)	57.9	57.9	57.9	
$P_1 = \frac{(100)(Vn)}{V_E}$ (P1 = percent isokinetic)	101	101	101	
TP = total weight of particulate caught in sampler during a run (g.)	0.1240	0.1431	0.1652	
FW = gain in weight of filter during a run (g.)	0.0983	0.1174	0.1395	
FB = gain in weight of blank filter (to compensate for filter handling) (g.)	-0.0043	-0.0043	-0.0043	
AW = gain in weight from acetone wash of sampler at end of each series of runs (complete test) (g.)	0.0684	0.0684	0.0684	
AB = gain in weight of blank volume of acetone (to compensate for impurities in acetone) (g.)	0.0041	0.0041	0.0041	
N = number of runs in each test over which only a single probe wash occurs	3	3	3	
$TP = FW - FB + \frac{AW - AB}{N}$ (TP = total particulate catch per sample run)	0.1240	0.1431	0.1652	

Company Halls Gin Co. Test Date Oct. 26, 1988

Cyclone I.D. Gin Stand 2B (Moss)

Run #	1	2	3	Ave.
M_s = percent moisture in exit gases (weighted averages of percent moistures obtained in inlet ducts)	1.9	1.9	1.9	
$QS_{std} = \frac{(SV)(17.71)(P_{bar})(1-\frac{Ms}{-100})}{(T_o + 460)}$ (QSstd = total volume sampled at standard conditions ft^3)	345.6	345.6	345.6	
C_s (gr/dscf) = $\frac{(15.43)(TP)}{(QS_{std})}$ (Cs = particulate concentration)	0.0055	0.0064	0.0074	0.0064
$PMR_{lb/hr} = (C_s)(TQ_{std})(0.00857)$ TQ_{std} = (total air into cyclone) (PMR = mass emission rate)	0.10 0.0971	0.113	0.131	0.11

(Note 1)

The rate of air flow through the orifice is precalculated for all pressure drops across the orifice using the various nozzles for an orifice temperature of 60°F. This figure is then converted to the actual air flow at the orifice temperature by the equation:

$$SR = \frac{(SR60)(T_o = 460)}{520}$$

Where: SR60 = sampling rate through orifice at 60°F
To = average temperature of orifice (°F)

JS/ah/APCHd1

RADER I
GINSTAND 2B
(MOSS)
BLANK
10/20/88
Hills Cotton Gin

Filter No. 001663

City & Station

Date Start ____ Mo ____ Day ____ Yr ____ Hr

Date Stop ____ Mo ____ Day ____ Yr ____ Hr

Flow Time
Stop ____ Stop ____
Start ____ Start ____
Ave ____ Total ____

Remarks

Wt Sample & Filter 4.3128

Wt Filter 4.3171 4.3165 10-12-88 LCS

Wt Sample -0.0043

Filter Conc.

Initial weighing by WCH DATE 10-10-88

Final weighing by WCH Date 11-8-88

Metals sample taken by ____ Date ____

Microscopic sample taken by ____ Date ____

Sample Custody

1. Collected by ____ Date ____
   Delivered to ____ Date ____
2. Received by ____ Date ____
   Delivered to ____ Date ____
3. Received by ____ Date ____
   Delivered to ____ Date ____
4. Received in laboratory by ____
   Date ____ from ____

PH-2857
LAB 8/88

Rider I
Gin Stand 2B
(Moss)
Run #1
10/20/88
Hall's Cotton Ln

Filter No. 001662

City & Station

Date Start ____ Mo ____ Day ____ Yr ____ Hr

Flow Time
Stop ____ Stop ____

Date Stop ____ Mo ____ Day ____ Yr ____ Hr

Start ____ Start ____
Ave ____ Total ____

Remarks

Wt Sample & Filter 4.4616

Wt Filter 4.3633

Wt Sample 0.0983

Filter Conc.

Initial weighing by WCH DATE 10-10-88

Final weighing by WCH Date 11-8-88

Metals sample taken by ____ Date ____

Microscopic sample taken by ____ Date ____

Sample Custody

1. Collected by ____ Date ____
   Delivered to ____ Date ____
2. Received by ____ Date ____
   Delivered to ____ Date ____
3. Received by ____ Date ____
   Delivered to ____ Date ____
4. Received in laboratory by ____
   Date ____ from ____

PII-2857
LAB 8/86

Radec I
Gin Stand 2B
(Moss)
Run #2
10/26/88
Hallis Cotton Gin

Filter No. 001666

City & Station

Date Start Mo Day Yr Hr

Date Stop Mo Day Yr Hr

Flow Time
Stop Stop
Start Start
Ave Total

Remarks

Wt Sample & Filter 4.4242

Wt Filter 4.3068

Wt Sample 0.1174

Filter Conc.

Initial weighing by WCH DATE 10-11-88

Final weighing by WCH Date 11-8-88

Metals sample taken by Date

Microscopic sample taken by Date

Sample Custody

1. Collected by Date
   Delivered to Date
2. Received by Date
   Delivered to Date
3. Received by Date
   Delivered to Date
4. Received in laboratory by
   Date from

PH-7857
LAB 8/88

Rader I
Gin Stand 2B
(Moss)
Run #3
10/26/88
Halls Cotton Gin

Filter No. 001668

City & Station

Date Start Mo Day Yr Hr

Flow Time
Stop Stop

Date Stop Mo Day Yr Hr

Start Start

Ave Total

Remarks

Wt Sample & Filter 4.4978

Wt Filter 4.3583

Wt Sample 0.1395

Filter Conc.

Initial weighing by WCH DATE 10-11-88

Final weighing by WCH Date 11-8-88

Metals sample taken by Date

Microscopic sample taken by Date

Sample Custody

1. Collected by Date
   Delivered to Date
2. Received by Date
   Delivered to Date
3. Received by Date
   Delivered to Date
4. Received in laboratory by
   Date from

PH-2657
LAB 8/88

SOURCE SAMPLING PARTICULATE LAB DATA (method 5), Sheet APC 614

Company Halls, TN Cotton Gin Company No. _____

Process Gin Stand 2B Moss Test Date 10-26-88

ACETONE BLANK APC 603

Run No.	_____	_____	_____
Beaker No.	12	13	_____
Acetone Volume, ml.	150	130	280 total
Beaker + Acetone Residue Wt., g	110.4916	108.3142	_____
Beaker tare weight, g	110.4892	108.3128	_____
Net weight, g	0.0024	0.0014	0.0038 total
Residue factor (R.f.), g/ml ($\frac{\text{net wt.}}{\text{acetone vol.}}$)	_____	_____	0.00001)

FRONT HALF ACETONE WASH APC 614

Run. No.	42+3	_____	_____
Beaker No.	30	31	_____
Wash vol., ml	200	100	300 total
Gross residue wt.g.	0.0447	0.0237	_____
Blank wt., g (R.f. x wash vol.)	0.0020	0.0010	_____
Net wt., g.	0.0427	0.0227	0.0654 total

CYCLONE FIELD DATA FORM

Company Halls Gin Co. Date Oct. 26, 1988

Cyclone I. D. Gin Stand 2A (16D)

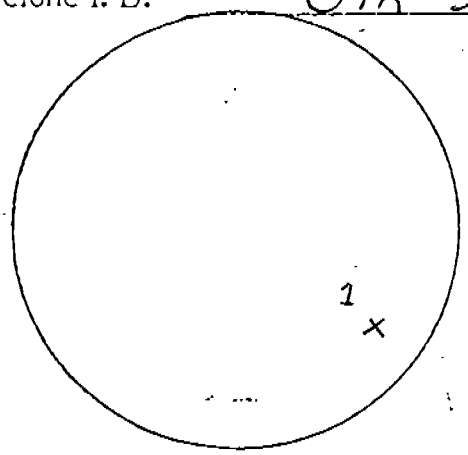

Approximate area of measurable flow and points sampled

point #	ΔP	ΔH
1	0.6	0.137

exit dry bulb 70°F

exit wet bulb 62°F

train # 1

nozzle diameter 1.116

orifice temp. see below

barometric pressure 29.82

CYCLONE DIMENSIONS: CHECK THE APPROPRIATE EXIT CONFIGURATION

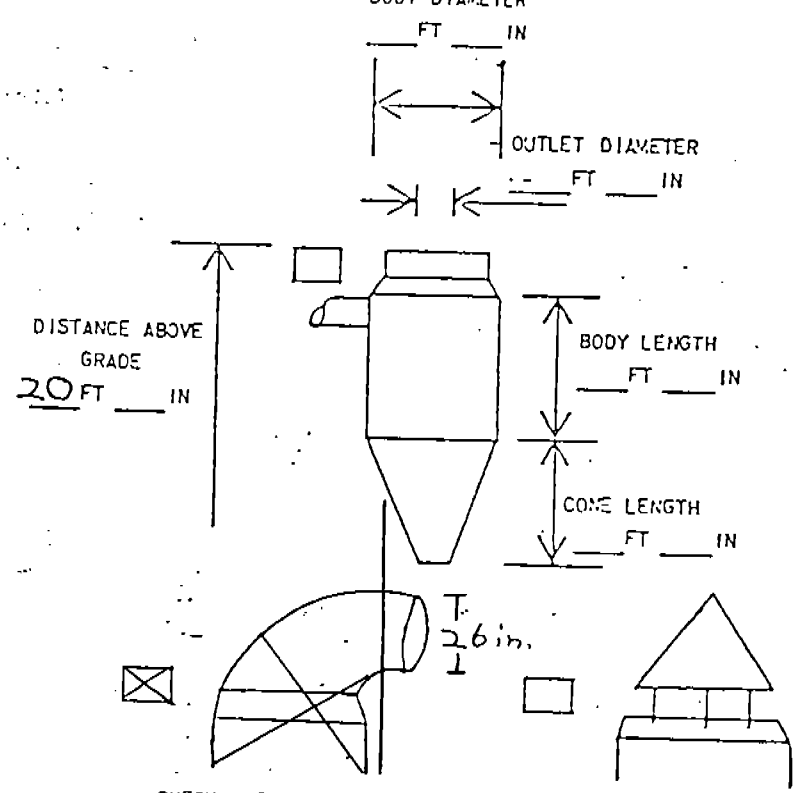

CHECK THE APPROPRIATE INLET CONFIGURATION:

If different from above draw diagram below:

COMMENTS	Run #	Time	T_s (°F)	T_o (°F)
	1	2:57-3:12 PM	70	75
	2	3:17-3:32 PM	70	75
	3	3:40-3:55 PM	70	75

CALCULATION OF ACTUAL EMISSIONS

HALLS GIN COMPANY (49-00074)

Source Identification Gin Stand 2A (16D)

Test Date Oct. 26, 1988

Q = actual airflow in ft^3/min* 2,831

T_d = dry bulb temperature at exhaust point 70°F

T_w = wet bulb temperature at exhaust point 62°F

M = percent moisture in exhaust gases 1.9%

P_{bar} = barometric pressure 29.82

$$Q_{std} = (Q)\left(1 - \frac{M}{100}\right)$$

2,777

Q_{std} in dry standard ft^3/min

* Based on fan data obtained from the designer and builder of the gin. The fan data is at ambient temperature, which is approximately 70° F. Barometric pressures measured during the testing were within one percent of 29.92 in. of Hg. Therefore, the given flows are considered to be at standard conditions.

Company Halls Gin Co. Test Date Oct. 26, 1988

Cyclone I.D. Gin Stand 2A (16D)

Page 1 of 3

Point No.	1	2	3	4	5	6
Point ΔP	0.60					
SR60 = sampling rate through orifice at 60°F (see Note 1 on third page following)	20.692					
T_o = average temperature of orifice (°F)	75					
$SR = \frac{(SR60)(T_o + 460)}{520}$ (SR = Sampling rate in ft/min)	21.289					
T_p = time per sample point (min)	15					

Run #	1	2	3	Ave.
$SV = (T_p)_1 (SR)_1 + (T_p)_2 (SR)_2 + \ldots$ (SV = total sample volume in ft^3)	319.33	319.33	319.33	
T_t = total sampling time (min.)	15	15	15	
$ASV_{ft^3/min} = \frac{SV}{T_t}$ (ASV = average volume sampled)	21.289	21.289	21.289	
T_E = average temperature of exit (°F)	70	70	70	
M_E = molecular weight of exit gases (weighted averages of molecular weights obtained in inlet ducts)	28.79	28.79	28.79	
P_{bar} = barometric pressure	29.82	29.82	29.82	
C_p = 0.99 (pitot tube coeficient)	0.99	0.99	0.99	
$V_E = (85.48)(C_p)\left[AVE\sqrt{\Delta P_E}\right]\left[\sqrt{\frac{(T_E + 460)}{(M_E)(P_{bar})}}\right]$ (VE = average velocity at sampling points ft/sec)	51.5	51.5	51.5	
d_n = diameter of nozzle (in.)	1.116	1.116	1.116	

Company Halls Gin Co. Test Date Oct. 26, 1988

Cyclone I.D. Gin Stand 2A (16D)

Run #	1	2	3	Ave.
$A_n = \frac{\pi \times (d_n)^2}{4}$ (An = area of nozzle in.^{2})	0.978	0.978	0.978	
$V_n = \frac{(ASV)(T_E + 460)(2.4)}{(A_n)(T_o + 460)}$ (Vn = average velocity in nozzle ft/sec)	51.8	51.8	51.8	
$P_1 = \frac{(100)(Vn)}{V_E}$ (P1 = percent isokinetic)	101	101	101	
TP = total weight of particulate caught in sampler during a run (g.)	1.5119	1.7810	1.8815	
FW = gain in weight of filter during a run (g.)	1.4455	1.7146	1.8151	
FB = gain in weight of blank filter (to compensate for filter handling) (g.)	-0.0062	-0.0062	-0.0062	
AW = gain in weight from acetone wash of sampler at end of each series of runs (complete test) (g.)	0.1873	0.1873	0.1873	
AB = gain in weight of blank volume of acetone (to compensate for impurities in acetone) (g.)	0.0066	0.0066	0.0066	
N = number of runs in each test over which only a single probe wash occurs	3	3	3	
$TP = FW - FB + \frac{AW - AB}{N}$ (TP = total particulate catch per sample run)	1.5119	1.7810	1.8815	

Company Halls Gin Co. Test Date Oct. 26, 1988

Cyclone I.D. Gin Stand 2A (16D)

Run #	1	2	3	Ave.
M_S = percent moisture in exit gases (weighted averages of percent moistures obtained in inlet ducts)	1.9	1.9	1.9	
$QS_{std} = \frac{(SV)\ (17.71)\ (P_{bar})\ (1-\frac{Ms}{-100})}{(T_o + 460)}$ (QSstd = total volume sampled at standard conditions ft^3)	309.2	309.2	309.2	
C_s (gr/dscf) = $\frac{(15.43)\ (TP)}{(QS_{std})}$ (Cs = particulate concentration)	0.0754	0.0889	0.0939	0.0861
$PMR_{lb/hr} = (C_s)\ (TQ_{std})\ (0.00857)$ TQ_{std} = (total air into cyclone) (PMR = mass emission rate)	1.80	2.12	2.23	2.05

(Note 1)

The rate of air flow through the orifice is precalculated for all pressure drops across the orifice using the various nozzles for an orifice temperature of 60°F. This figure is then converted to the actual air flow at the orifice temperature by the equation:

$$SR = \frac{(SR60)\ (T_o = 460)}{520}$$

Where: SR60 = sampling rate through orifice at 60°F
To = average temperature of orifice (°F)

JS/ah/APCHd1

Rader I
6in Stand 2A
(160)
Blank
10/26/88
Hills Cutton 6in

Filter No. 001653

City & Station

Date Start ____ Mo ____ Day ____ Yr ____ Hr

Flow Time
Stop ____ Stop ____

Date Stop ____ Mo ____ Day ____ Yr ____ Hr

Start ____ Start ____

Ave ____ Total ____

Remarks

Wt Sample & Filter 4.3610

Initial weighing by

Wt Filter 4.3672 4.3669 10-12-88 WCH DATE 10-10-88

Wt Sample -0.0062

Final weighing by

Filter Conc. WCH Date 11-7-88

Metals sample taken by ____ Date ____

Microscopic sample taken by ____ Date ____

Sample Custody

1. Collected by ____ Date ____

   Delivered to ____ Date ____

2. Received by ____ Date ____

   Delivered to ____ Date ____

3. Received by ____ Date ____

   Delivered to ____ Date ____

4. Received in laboratory by ____

   Date ____ from ____

PH-2857
LAB 8/88

Range I
Low Stand 2A
(160)
Run #1
10/20/88
Glass Cartridge

Filter No. 001654

City & Station _____

Date Start ____ Mo ____ Day ____ Yr ____ Hr

Flow Time
Stop _____ Stop _____
Start _____ Start _____
Ave _____ Total _____

Date Stop ____ Mo ____ Day ____ Yr ____ Hr

Remarks _____

Wt Sample & Filter 5.7910

Wt Filter 4.3455

Wt Sample 1.4455

Filter Conc. _____

Initial weighing by
WCH DATE 10-10-88

Final weighing by
WCH Date 11-7-88

Metals sample taken by _____ Date _____

Microscopic sample taken by _____ Date _____

Sample Custody

1. Collected by _____ Date _____
   Delivered to _____ Date _____
2. Received by _____ Date _____
   Delivered to _____ Date _____
3. Received by _____ Date _____
   Delivered to _____ Date _____
4. Received in laboratory by _____
   Date _____ from _____

PH-2857
LAB 8/88

Rider I.
Gin Stand 2A
(16D)
Run #2
10/26/88
Hallis Cotton Gin

Filter No. 001658

City & Station

Date Start ____ Mo ____ Day ____ Yr ____ Hr

Flow Time
Stop ____ Stop ____

Date Stop ____ Mo ____ Day ____ Yr ____ Hr

Start ____ Start ____

Ave ____ Total ____

Remarks

Wt Sample & Filter 6.0336

Wt Filter 4.3190

Wt Sample 1.7146

Filter Conc.

Initial weighing by WCH DATE 10-10-88

Final weighing by WCH Date 11-7-88

Metals sample taken by ____ Date ____

Microscopic sample taken by ____ Date ____

Sample Custody

1. Collected by ____ Date ____
   Delivered to ____ Date ____
2. Received by ____ Date ____
   Delivered to ____ Date ____
3. Received by ____ Date ____
   Delivered to ____ Date ____
4. Received in laboratory by ____
   Date ____ from ____

PH-2857
LAB 8/86

RADER I
GIN STAND 2A
(160)
Run #3
10/26/88
Hallis Cotton Gin

Filter No. 001660

City & Station

Date Start ____ Mo ____ Day ____ Yr ____ Hr

Flow Time
Stop ____ Stop ____

Date Stop ____ Mo ____ Day ____ Yr ____ Hr

Start ____ Start ____

Ave ____ Total ____

Remarks

Wt Sample & Filter 6.2766

Wt Filter 4.4615

Wt Sample 1.8151

Filter Conc.

Initial weighing by WCH DATE 10-10-88

Final weighing by ____ Date ____

Metals sample taken by ____ Date ____

Microscopic sample taken by ____ Date ____

Sample Custody

1. Collected by ____ Date ____
   Delivered to ____ Date ____
2. Received by ____ Date ____
   Delivered to ____ Date ____
3. Received by ____ Date ____
   Delivered to ____ Date ____
4. Received in laboratory by ____
   Date ____ from ____

PH-2857
LAB 8/86

SOURCE SAMPLING PARTICULATE LAB DATA (method 5), Sheet APC 615

Company Halls, TN Cotton Gin Company No. _____

Process Gin Stand 2A (16D) Test Date 10-26-88

ACETONE BLANK APC 603

Run No.	_____	_____	_____
Beaker No.	12	13	_____
Acetone Volume, ml.	150	130	280 total
Beaker + Acetone Residue Wt., g	110.4916	108.3142	_____
Beaker tare weight, g	110.4892	108.3128	_____
Net weight, g	0.0024	0.0014	0.0038 total
Residue factor (R.f.), g/ml ($\frac{\text{net wt.}}{\text{acetone vol.}}$)	_____	_____	0.00001)

FRONT HALF ACETONE WASH APC 615

Run. No.	1, 2 & 3	_____	_____
Beaker No.	32	33	34
Wash vol., ml	200	200	90 490 tot
Gross residue wt.g.	0.0709	0.0664	0.0500
Blank wt., g (R.f. x wash vol.)	0.0020	0.0020	0.0009
Net wt., g.	0.0689	0.0644	0.0491

total wt = 0.1821

CYCLONE FIELD DATA FORM

Company Halls Gin Co. Date Oct. 26, 1988

Cyclone I. D. Gin Stand 3B (Moss)

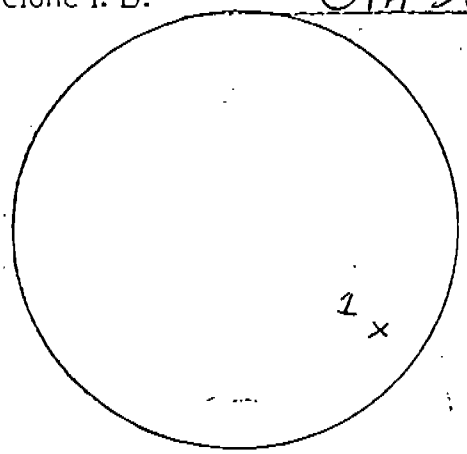

Approximate area of measurable flow and points sampled

point #	ΔP	ΔH
1	0.75	0.173

exit dry bulb 70°F

exit wet bulb 62°F

train # 1

nozzle diameter 1.116

orifice temp. see below

barometric pressure 29.87

CYCLONE DIMENSIONS: CHECK THE APPROPRIATE EXIT CONFIGURATION

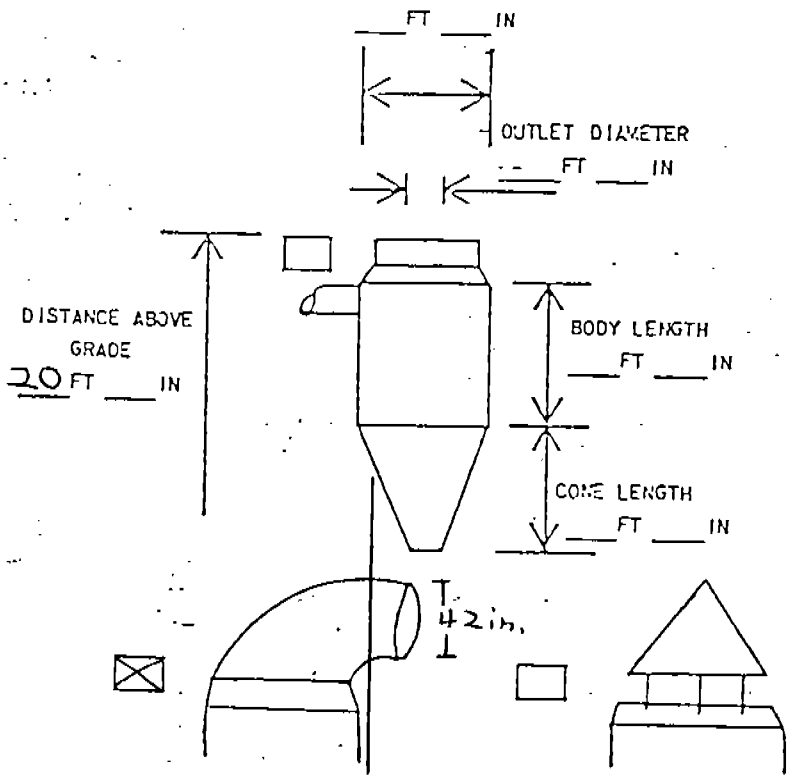

CHECK THE APPROPRIATE INLET CONFIGURATION:

If different from above draw diagram below:

COMMENTS	Run #	Time	T_s (°F)	T_o (°F)
	1	11:53AM-12:08PM	70	73
	2	12:28-12:43 PM	70	73
	3	12:50-1:05 PM	70	73

CALCULATION OF ACTUAL EMISSIONS

HALLS GIN COMPANY (49-00074)

Source Identification Gin Stand 3B (Moss)

Test Date Oct. 26, 1988

Q = actual airflow in ft^3/min*	2,100
T_d = dry bulb temperature at exhaust point	70°F
T_w = wet bulb temperature at exhaust point	62°F
M = percent moisture in exhaust gases	1.9%
P_{bar} = barometric pressure	29.87

$$Q_{std} = (Q)\left(1 - \frac{M}{100}\right)$$

Q_{std} = 2,060

Q_{std} in dry standard ft^3/min

* Based on fan data obtained from the designer and builder of the gin. The fan data is at ambient temperature, which is approximately 70° F. Barometric pressures measured during the testing were within one percent of 29.92 in. of Hg. Therefore, the given flows are considered to be at standard conditions.

Company Halls Gin Co. Test Date Oct. 26, 1988

Cyclone I.D. Gin Stand 3B (Moss)

Point No.	1	2	3	4	5	6
Point ΔP	0.75					
SR60 = sampling rate through orifice at 60°F (see Note 1 on third page following)	23.134					
T_o = average temperature of orifice (°F)	73					
$SR = \frac{(SR60)(T_o + 460)}{520}$ (SR = Sampling rate in ft/min)	23.712					
T_p = time per sample point (min)	15					

Run #	1	2	3	Ave.
$SV = (T_p)_1 (SR)_1 + (T_p)_2 (SR)_2 + \ldots$ (SV = total sample volume in ft^3)	355.68	355.68	355.68	
T_t = total sampling time (min.)	15	15	15	
$ASV_{ft^3/min} = \frac{SV}{T_t}$ (ASV = average volume sampled)	23.712	23.712	23.712	
T_E = average temperature of exit (°F)	70	70	70	
M_E = molecular weight of exit gases (weighted averages of molecular weights obtained in inlet ducts)	28.79	28.79	28.79	
P_{bar} = barometric pressure	29.87	29.87	29.87	
C_p = 0.99 (pitot tube coeficient)	0.99	0.99	0.99	
$V_E = (85.48)(C_p)\left[AVE\sqrt{\Delta P_E}\right]\left[\sqrt{\frac{(T_E + 460)}{(M_E)(P_{bar})}}\right]$ (VE = average velocity at sampling points ft/sec)	57.5	57.5	57.5	
d_n = diameter of nozzle (in.)	1.116	1.116	1.116	

Company Halls Gin Co. Test Date Oct. 26, 1988

Cyclone I.D. Gin Stand 3B (Moss)

Run #	1	2	3	Ave.
$A_n = \frac{\pi \times (d_n)^2}{4}$ (An = area of nozzle in.^{2})	0.978	0.978	0.978	
$V_n = \frac{(ASV)(T_E + 460)(2.4)}{(A_n)(T_o + 460)}$ (Vn = average velocity in nozzle ft/sec)	57.9	57.9	57.9	
$P_1 = \frac{(100)(Vn)}{V_E}$ (P1 = percent isokinetic)	101	101	101	
TP = total weight of particulate caught in sampler during a run (g.)	0.0550	0.0727	0.0872	
FW = gain in weight of filter during a run (g.)	0.0599	0.0776	0.0921	
FB = gain in weight of blank filter (to compensate for filter handling) (g.)	0.0172	0.0172	0.0172	
AW = gain in weight from acetone wash of sampler at end of each series of runs (complete test) (g.)	0.0397	0.0397	0.0397	
AB = gain in weight of blank volume of acetone (to compensate for impurities in acetone) (g.)	0.0028	0.0028	0.0028	
N = number of runs in each test over which only a single probe wash occurs	3	3	3	
$TP = FW - FB + \frac{AW - AB}{N}$ (TP = total particulate catch per sample run)	0.0550	0.0727	0.0872	

Company Halls Gin Co. Test Date Oct. 26, 1988

Cyclone I.D. Gin Stand 3B (Moss)
Page 3 of 3

Run #	1	2	3	Ave.
M_s = percent moisture in exit gases (weighted averages of percent moistures obtained in inlet ducts)	1.9	1.9	1.9	
$QS_{std} = \frac{(SV)(17.71)(P_{bar})(1-\frac{Ms}{-100})}{(T_o + 460)}$ (QSstd = total volume sampled at standard conditions ft^3)	346.3	346.3	346.3	
C_s (gr/dscf) = $\frac{(15.43)(TP)}{(QS_{std})}$ (Cs = particulate concentration)	0.0025	0.0032	0.0039	0.0032
$PMR_{lb/hr} = (C_s)(TQ_{std})(0.00857)$ TQ_{std} = (total air into cyclone) (PMR = mass emission rate)	0.0441	0.06 ~~0.0565~~	0.07 ~~0.0689~~	0.06

(Note 1)

The rate of air flow through the orifice is precalculated for all pressure drops across the orifice using the various nozzles for an orifice temperature of 60°F. This figure is then converted to the actual air flow at the orifice temperature by the equation:

$$SR = \frac{(SR60)(T_o = 460)}{520}$$

Where: SR60 = sampling rate through orifice at 60°F
To = average temperature of orifice (°F)

JS/ah/APCHd1

GIN STAND 3B (MOSS)

RADER I
~~2A Lattice Cleaner~~
~~Cyclone 5B~~
BLANK KET 10/04/88
10/04/88
Hall's Cotton Gin

Filter No. C01638

City & Station

Date Start Mo Day Yr Hr

Date Stop Mo Day Yr Hr

Flow Time
Stop Stop
Start Start
Ave Total

Remarks

Wt Sample & Filter 4.3583

Wt Filter 4.3411

Wt Sample 0.0172

Filter Conc.

Initial weighing by WCH DATE 10-10-88

Final weighing by WCH Date 11-7-88

Metals sample taken by Date

Microscopic sample taken by Date

Sample Custody

1. Collected by Date
   Delivered to Date
2. Received by Date
   Delivered to Date
3. Received by Date
   Delivered to Date
4. Received in laboratory by
   Date from

PH-2857
LAB 8/88

Gin Stand 3B (moss)

Radek I
~~2A Incline Cleaner~~
~~Cyclone 5B~~
Run #1 KET 10/26/88
Halls Cotton Gin

Filter No. 001039

City & Station

Date Start ____ Mo ____ Day ____ Yr ____ Hr

Date Stop ____ Mo ____ Day ____ Yr ____ Hr

Flow Time
Stop ____ Stop ____
Start ____ Start ____
Ave ____ Total ____

Remarks

Wt Sample & Filter 4.4292 4.4320 ~~1/27~~ 11-9-88

Wt Filter 4.3693

Wt Sample 0.0699

Filter Conc.

Initial weighing by WCH DATE 10-10-88

Final weighing by WCH Date 11-7-88

Metals sample taken by ____ Date ____

Microscopic sample taken by ____ Date ____

Sample Custody

1. Collected by ____ Date ____
   Delivered to ____ Date ____
2. Received by ____ Date ____
   Delivered to ____ Date ____
3. Received by ____ Date ____
   Delivered to ____ Date ____
4. Received in laboratory by ____
   Date ____ from ____

PH-2857
LAB 8/86

Rader I
Gin Stand 3B
(Moss)
Run #2
10/26/88
Hills Cotton Gin

Filter No. 001612

City & Station

Date Start ____ Mo ____ Day ____ Yr ____ Hr

Flow Time
Stop ____ Stop ____

Date Stop ____ Mo ____ Day ____ Yr ____ Hr

Start ____ Start ____

Ave ____ Total ____

Remarks

Wt Sample & Filter 4.4458

Wt Filter 4.3682

Wt Sample 0.0776

Filter Conc.

Initial weighing by WCH DATE 10-10-88

Final weighing by WCH Date 11-7-88

Metals sample taken by ____ Date ____

Microscopic sample taken by ____ Date ____

Sample Custody

1. Collected by ____ Date ____
   Delivered to ____ Date ____
2. Received by ____ Date ____
   Delivered to ____ Date ____
3. Received by ____ Date ____
   Delivered to ____ Date ____
4. Received in laboratory by ____
   Date ____ from ____

PH-2857
LAB 8/86

Radex I
Gin Stand 3B
(Moss)
Run #3
10/26/88
Hales Cotton Gin

Filter No. 001644

City & Station

Date Start ____ Mo ____ Day ____ Yr ____ Hr

Flow Time
Stop ____ Stop ____

Date Stop ____ Mo ____ Day ____ Yr ____ Hr

Start ____ Start ____

Ave ____ Total ____

Remarks

Wt Sample & Filter 4.4307

Wt Filter 4.3386

Wt Sample 0.0921

Filter Conc.

Initial weighing by WCH DATE 10-10-88

Final weighing by WCH Date 11-7-88

Metals sample taken by ____ Date ____

Microscopic sample taken by ____ Date ____

Sample Custody

1. Collected by ____ Date ____
   Delivered to ____ Date ____
2. Received by ____ Date ____
   Delivered to ____ Date ____
3. Received by ____ Date ____
   Delivered to ____ Date ____
4. Received in laboratory by ____
   Date ____ from ____

PH-2857
LAB 8/88

SOURCE SAMPLING PARTICULATE LAB DATA (method 5), Sheet APC 611

Company Halls, TN Cotton Gin Company No. _____

Process Gin Stand 3B Moss Test Date 10-26-88

ACETONE BLANK APC 603

Run No.			
Beaker No.	12	13	
Acetone Volume, ml.	150	130	280 total
Beaker + Acetone Residue Wt., g	110.4916	108.3142	
Beaker tare weight, g	110.4892	108.3128	
Net weight, g	0.0024	0.0014	0.0038 total
Residue factor (R.f.), g/ml ($\frac{\text{net wt.}}{\text{acetone vol.}}$)			0.00001)

FRONT HALF ACETONE WASH APC 611

Run. No.	1,2+3		
Beaker No.	25		
Wash vol., ml	205		
Gross residue wt.g.	0.0397		
Blank wt., g (R.f. x wash vol.)	0.0020		
Net wt., g.	0.0377		

CYCLONE FIELD DATA FORM

Company Halls Gin Co. Date Oct. 26, 1988

Cyclone I. D. Gin Stand 3A (16D)

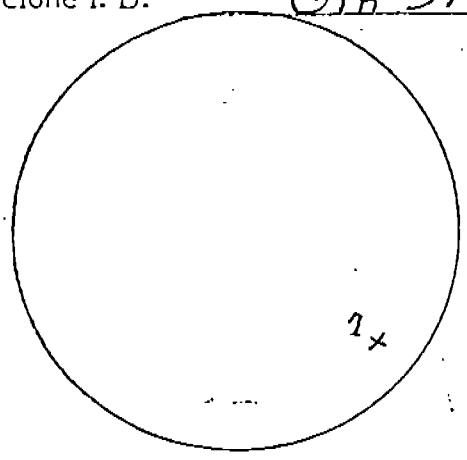

Approximate area of measurable flow and points sampled

point #	ΔP	ΔH
1	0.6	0.137

exit dry bulb 70°F

exit wet bulb 62°F

train # 1

nozzle diameter 1.116

orifice temp. see below

barometric pressure 29.83

CYCLONE DIMENSIONS: CHECK THE APPROPRIATE EXIT CONFIGURATION

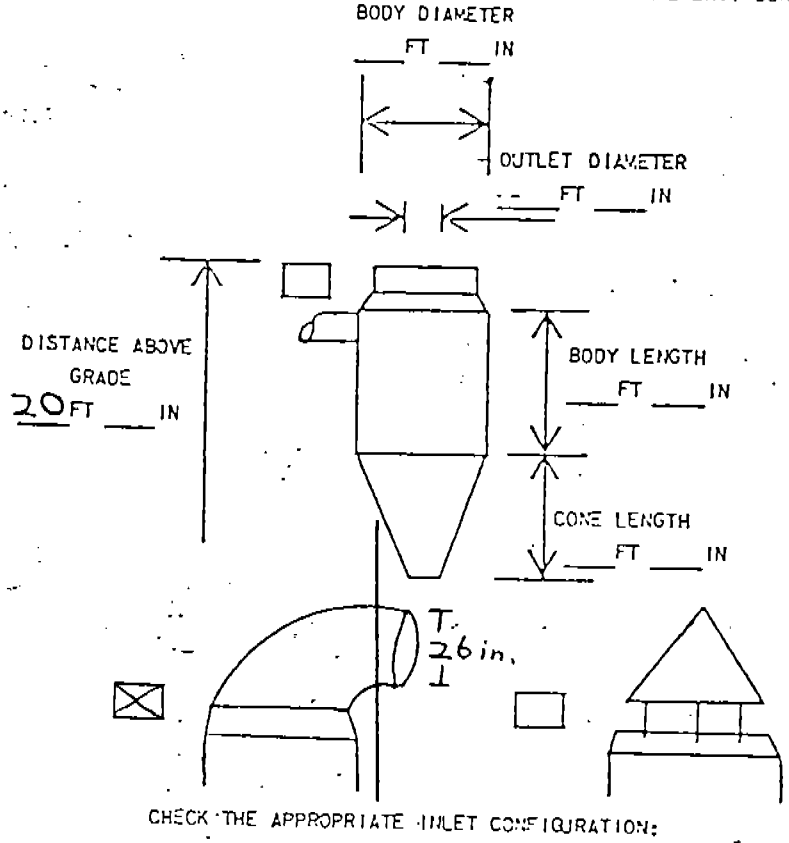

CHECK THE APPROPRIATE INLET CONFIGURATION:

If different from above draw diagram below:

COMMENTS

Run #	Time	T_s (°F)	T_o (°F)
1	1:21-1:36 PM	70	75
2	1:45-2:00 PM	70	75
3	2:06-2:21 PM	70	75

CALCULATION OF ACTUAL EMISSIONS

HALLS GIN COMPANY (49-00074)

Source Identification Gin Stand 3A (16D)

Test Date Oct. 26, 1988

Q = actual airflow in ft^3/min* 2,831

T_d = dry bulb temperature at exhaust point 70°F

T_w = wet bulb temperature at exhaust point 62°F

M = percent moisture in exhaust gases 1.9%

P_{bar} = barometric pressure 29.83

$$Q_{std} = (Q)\ (1 - \frac{M}{100})$$

2,777

Q_{std} in dry standard ft^3/min

* Based on fan data obtained from the designer and builder of the gin. The fan data is at ambient temperature, which is approximately 70° F. Barometric pressures measured during the testing were within one percent of 29.92 in. of Hg. Therefore, the given flows are considered to be at standard conditions.

Company Halls Gin Co. Test Date Oct. 26, 1988

Cyclone I.D. Gin Stand 3A (16D)

Point No.	1	2	3	4	5	6
Point ΔP	0.6					
SR60 = sampling rate through orifice at 60°F (see Note 1 on third page following)	20.692					
T_o = average temperature of orifice (°F)	75					
$SR = \frac{(SR60)(T_o + 460)}{520}$ (SR = Sampling rate in ft/min)	21.289					
T_p = time per sample point (min)	15					

Run #	1	2	3	Ave.
$SV = (T_p)_1 (SR)_1 + (T_p)_2 (SR)_2 + \ldots$ (SV = total sample volume in ft^3)	319.33	319.33	319.33	
T_t = total sampling time (min.)	15	15	15	
$ASV_{ft^3/min} = \frac{SV}{T_t}$ (ASV = average volume sampled)	21.289	21.289	21.289	
T_E = average temperature of exit (°F)	70	70	70	
M_E = molecular weight of exit gases (weighted averages of molecular weights obtained in inlet ducts)	28.79	28.79	28.79	
P_{bar} = barometric pressure	29.83	29.83	29.83	
C_p = 0.99 (pitot tube coeficient)	0.99	0.99	0.99	
$V_E = (85.48)(C_p)\left[AVE\sqrt{\Delta P_E}\right]\left[\sqrt{\frac{(T_E + 460)}{(M_E)(P_{bar})}}\right]$ (VE = average velocity at sampling points ft/sec)	51.5	51.5	51.5	
d_n = diameter of nozzle (in.)	1.116	1.116	1.116	

Company Halls Gin Co. Test Date Oct. 26, 1988

Cyclone I.D. Gin Stand 3A (16D)

Run #	1	2	3	Ave.
$A_n = \frac{\pi \times (d_n)^2}{4}$ (An = area of nozzle in.^{2})	0.978	0.978	0.978	
$V_n = \frac{(ASV)(T_E + 460)(2.4)}{(A_n)(T_o + 460)}$ (Vn = average velocity in nozzle ft/sec)	51.8	51.8	51.8	
$P_1 = \frac{(100)(Vn)}{V_E}$ (P1 = percent isokinetic)	101	101	101	
TP = total weight of particulate caught in sampler during a run (g.)	0.8125	0.8458	0.9754	
FW = gain in weight of filter during a run (g.)	0.7710	0.8043	0.9339	
FB = gain in weight of blank filter (to compensate for filter handling) (g.)	-0.0041	-0.0041	-0.0041	
AW = gain in weight from acetone wash of sampler at end of each series of runs (complete test) (g.)	0.1156	0.1156	0.1156	
AB = gain in weight of blank volume of acetone (to compensate for impurities in acetone) (g.)	0.0034	0.0034	0.0034	
N = number of runs in each test over which only a single probe wash occurs	3	3	3	
$TP = FW - FB + \frac{AW - AB}{N}$ (TP = total particulate catch per sample run)	0.8125	0.8458	0.9754	

Company Halls Gin Co. Test Date Oct. 26, 1988

Cyclone I.D. Gin Stand 3A (16D)

Run #	1	2	3	Ave.
M_S = percent moisture in exit gases (weighted averages of percent moistures obtained in inlet ducts)	1.9	1.9	1.9	
$QS_{std} = \frac{(SV)\ (17.71)\ (P_{bar})\ (1-\frac{Ms}{-100})}{(T_o + 460)}$ (QSstd = total volume sampled at standard conditions ft^3)	309.3	309.3	309.3	
C_s (gr/dscf) = $\frac{(15.43)\ (TP)}{(QS_{std})}$ (Cs = particulate concentration)	0.0405	0.0422	0.0487	0.0438
$PMR_{lb/hr} = (C_s)\ (TQ_{std})\ (0.00857)$ TQ_{std} = (total air into cyclone) (PMR = mass emission rate)	0.964	1.00	1.16	1.04

(Note 1)

The rate of air flow through the orifice is precalculated for all pressure drops across the orifice using the various nozzles for an orifice temperature of 60°F. This figure is then converted to the actual air flow at the orifice temperature by the equation:

$$SR = \frac{(SR60)\ (T_o = 460)}{520}$$

Where: SR60 = sampling rate through orifice at 60°F
To = average temperature of orifice (°F)

JS/ah/APCHd1

RADER I
COIN STAND SA
(1100)
BLANK
10/20/88
HAUS COTTONGIN

Filter No. 001646 001646

City & Station

Date Start ___ Mo ___ Day ___ Yr ___ Hr

Date Stop ___ Mo ___ Day ___ Yr ___ Hr

Flow Time
Stop ___ Stop ___
Start ___ Start ___
Ave ___ Total ___

Remarks

Wt Sample & Filter 4.3766

Wt Filter 4.3807

Wt Sample -0.0041

Filter Conc.

Initial weighing by
WCH DATE 10-10-88

Final weighing by
WCH Date 11-7-88

Metals sample taken by ___ Date ___

Microscopic sample taken by ___ Date ___

Sample Custody

1. Collected by ___ Date ___
   Delivered to ___ Date ___
2. Received by ___ Date ___
   Delivered to ___ Date ___
3. Received by ___ Date ___
   Delivered to ___ Date ___
4. Received in laboratory by ___
   Date ___ from ___

PH-2857
LAB 8/86

Radex I
Gin Stand 3A
(16D)
Run #1
10/26/88
Hills Cotton bin

Filter No. 001647

City & Station

Date Start ____ Mo ____ Day ____ Yr ____ Hr

Flow Time
Stop ____ Stop ____

Date Stop ____ Mo ____ Day ____ Yr ____ Hr

Start ____ Start ____

Ave ____ Total ____

Remarks

Wt Sample & Filter 5.1309

Wt Filter 4.3599

Wt Sample 0.7710

Filter Conc.

Initial weighing by WCH DATE 10-10-88

Final weighing by WCH Date 11-7-88

Metals sample taken by ____ Date ____

Microscopic sample taken by ____ Date ____

Sample Custody

1. Collected by ____ Date ____
   Delivered to ____ Date ____
2. Received by ____ Date ____
   Delivered to ____ Date ____
3. Received by ____ Date ____
   Delivered to ____ Date ____
4. Received in laboratory by ____
   Date ____ from ____

PII-2857
LAB 8/86

Paper I
Gin Stand 3A
(160)
Run #2
10/26/86
Hills Cotton Gin

Filter No. 001650

City & Station

Date Start ____ Mo ____ Day ____ Yr ____ Hr

Flow Time
Stop ____ Stop ____

Date Stop ____ Mo ____ Day ____ Yr ____ Hr

Start ____ Start ____

Ave ____ Total ____

Remarks

Wt Sample & Filter 5.1655

Wt Filter 4.3612

Wt Sample 0.8043

Filter Conc.

Initial weighing by WCH DATE 10-10-88

Final weighing by WCH Date 11-7-88

Metals sample taken by ____ Date ____

Microscopic sample taken by ____ Date ____

Sample Custody

1. Collected by ____ Date ____
   Delivered to ____ Date ____
2. Received by ____ Date ____
   Delivered to ____ Date ____
3. Received by ____ Date ____
   Delivered to ____ Date ____
4. Received in laboratory by ____
   Date ____ from ____

PH-2857
LAB 8/86

Lader I
Grinstand 3A
(160)
Run #3
10/26/88
Halls Cotton Co

Filter No. 001651

City & Station

Date Start ____ Mo ____ Day ____ Yr ____ Hr

Flow Time
Stop ____ Stop ____

Date Stop ____ Mo ____ Day ____ Yr ____ Hr

Start ____ Start ____

Ave ____ Total ____

Remarks

Wt Sample & Filter 5.2759

Wt Filter 4.3420

Wt Sample 0.9339

Filter Conc.

Initial weighing by WCH DATE 10-10-88

Final weighing by WCH Date 11-7-88

Metals sample taken by ____ Date ____

Microscopic sample taken by ____ Date ____

Sample Custody

1. Collected by ____ Date ____
   Delivered to ____ Date ____
2. Received by ____ Date ____
   Delivered to ____ Date ____
3. Received by ____ Date ____
   Delivered to ____ Date ____
4. Received in laboratory by ____
   Date ____ from ____

PH-2857
LAB 8/88

SOURCE SAMPLING PARTICULATE LAB DATA (method 5), Sheet APC 610

Company Halls Cotton Gin | Company No. _____

Process Gin Stand 3A (160) | Test Date 10-26-88

ACETONE BLANK APC 603

Run No.			
Beaker No.	12	13	
Acetone Volume, ml.	150	130	280 total
Beaker + Acetone Residue Wt., g	110.4916	108.3142	
Beaker tare weight, g	110.4892	108.3128	
Net weight, g	0.0024	0.0014	0.0038
Residue factor (R.f.), g/ml ($\frac{\text{net wt.}}{\text{acetone vol.}}$)			0.00001

FRONT HALF ACETONE WASH APC 610

Run. No.	42+3		
Beaker No.	23	24	
Wash vol., ml	150	100	250 total
Gross residue wt.g.	0.0697	0.0459	
Blank wt., g (R.f. x wash vol.)	0.0015	0.0010	
Net wt., g.	0.0682	0.0449	0.1131 total

PERSONNEL DATA

DATES OF SOURCE TEST: October 25-27, 1988

LOCATION OF SOURCE TEST: Halls Gin Company
Halls, Tennessee

PERSON IN CHARGE: Carl Koontz

PERSONNEL CONDUCTING THE SAMPLING:

Carl Koontz, Fred Singleton, Jeryl Stewart, Elizabeth Troup, Alvin Pratt, Vicki Lowe, & Mike Hale

IDENTIFICATION OF PERSONNEL SAMPLING VARIOUS EMISSION POINTS:

Fred Singleton, Jeryl Stewart - Cyclones 1A & 1B

Fred Singleton, Mike Hale - Cyclones 3A, 3B, 4A, 4B, 5A, 5B, 6A, 6B, 7A, 7B, 8A, 8B, 10, & 11

Jeryl Stewart, Alvin Pratt - Cyclones 1C, 1D, 2A, 2B, 9, Gin Stand 1 (Moss and 16D), Gin Stand 2 (Moss and 16D), Gin Stand 3 (Moss and 16D), and Battery Condenser

IDENTIFICATION OF PERSONNEL RECOVERING SAMPLES AND RESETTING

SAMPLING TRAINS: Elizabeth Troup, Vicki Lowe

PERSON COORDINATING VARIOUS ACTIVITIES: Carl Koontz

PERSON OBSERVING THE OPERATION OF THE PROCESS DURING THE TESTING: Eric Flowers

SOURCE SAMPLING CHAIN OF CUSTODY DOCUMENTATION
RADER HIGH VOLUME FILTER ISSUANCE FROM LABORATORY

Rader High Volume filters Nos. 01594 - 1740 issued to Compliance Monitoring Section on October 21, 1988 (date) by Nancy L. Flatt (laboratory person ~~preweighing filters~~). These were received by Katherine E. Iraup (Compliance Monitoring Section person receiving filters) on October 21, 1988 (date). These filters are maintained in a secure area under the custody of the Compliance Monitoring Section supervisor until their useage in the field.

Signed Nancy L. Flatt
~~person preweighing filters~~

Signed Katherine E. Iraup
Compliance Monitoring Section
Division of Air Pollution Control

SOURCE SAMPLING CHAIN OF CUSTODY DOCUMENTATION
RADER HIGH VOLUME SAMPLE ISSUANCE TO LABORATORY

THE FOLLOWING LISTED SAMPLES ACQUIRED FROM RADER HI VOL SAMPLING CONDUCTED AT THE HALLS, TN COTTON GIN ON OCTOBER 25-27, 1988, REMAINED IN EITHER MY CUSTODY OR IN A SAFE & SECURE LOCATION UNTIL THEIR RETURN TO THE LABORATORY FOR WEIGHT DETERMINATION.

FILTER #'s 001594 - 001617

10/25 - (1) ACETONE BLANK

- SUCK PIPE QUAD - CYCLONE 1A - (1) BLANK FILTER, (3) SAMPLE FILTERS, (1) FRONT HALF WASH
  " " " " 1B " " "
  " " " " 1C " " "
  " " " " 1D " " "
- 1A INCLINE CLEANER - CYCLONE 3B " " "
  3A " " "

SIGNED Katherine E. Troup DATE 10/31/88
COMPLIANCE MONITORING SECTION
DIVISION OF AIR POLLUTION CONTROL
DEPT. OF HEALTH & ENVIRONMENT

I ACKNOWLEDGE RECEIPT OF THE ABOVE LISTED SAMPLES.

SIGNED Jan Cathey DATE 10-31-88
LABORATORY PERSON RECEIVING SAMPLES

Source Sampling Chain Of Custody Documentation
Rader High Volume Sample Issuance To Laboratory

The Following Listed Samples Acquired From Rader Hi Vol Sampling Conducted At The Halls, TN Cotton Gin On October 25-27, 1988, Remained In Either My Custody Or In A Safe & Secure Location Until Their Return To The Laboratory For Weight Determination.

Filter #'s 0016018 - 0016069

10/26 - (1) Acetone Blank

- 1B Incline Cleaner - Cyclone 2B - (1) Blank Filter, (3) Sample Filters, (1) Front Half Was
- " " " " 2A - " " "
- 2B Incline Cleaner - Cyclone 4A - " " "
- " " " " 4B - " " "
- 2A Incline Cleaner - Cyclone 5A - " " "
- 5B - " " "
- Gin Stand 3 - Moss Vent GS3B - " " "
- Dlo Vent GS3A - " " "
- Overflow - Cyclone 6A - " " "
- 6B - " " "
- Gin Stand 2 - Dlo Vent GS2A - " " "
- Moss Vent GS2B - " " "
- Mote Trash - Cyclone 7A - " " "

Signed Katherine E Isaacs Date 10/31/88

Compliance Monitoring Program

I Acknowledge Receipt Of The Above Listed Samples.

Signed Jan Cathey Date 10-31-88

Laboratory Person Receiving Samples

SOURCE SAMPLING CHAIN OF CUSTODY DOCUMENTATION
RADER HIGH VOLUME SAMPLE ISSUANCE TO LABORATORY

THE FOLLOWING LISTED SAMPLES ACQUIRED FROM RADER HI VOL SAMPLING CONDUCTED AT THE HALLS, TN COTTON GIN ON OCTOBER 25-27, 1988, REMAINED IN EITHER MY CUSTODY OR IN A SAFE & SECURE LOCATION UNTIL THEIR RETURN TO THE LABORATORY FOR WEIGHT DETERMINATION.
FILTER #'s 001670 - 001706 (FILTERS VOIDED - #001684, 001689,
10/27 - (1) ACETONE BLANK
- MOTE TRASH - CYCLONE 7B - (1) BLANK FILTER (3) SAMPLE FILTERS, (1) WASH
- COTTON WASTE DISPOSAL - CYCLONE 8A - " " "
" " " " 8B - " (3) (BUT (1) VOIDED)
- GIN STAND 1 - MOSS VENT GS1B - " (3) SAMPLE FILTERS "
" " GS1A - " (4) ((1) VOIDED) "
- MOTE PRESS - CYCLONE 9 - " (3) SAMPLE FILTERS "
" " " 10 - " " "
" " " 11 - " " "
- BATTERY CONDENSER VENT (BCV) - " " "

SIGNED Katherine E. Iley DATE 10/31/88
COMPLIANCE MONITORING PROGRAM

I ACKNOWLEDGE RECEIPT OF THE ABOVE LISTED SAMPLES.

SIGNED Jan Cathey DATE 10-31-88
LABORATORY PERSON RECEIVING SAMPLES

RADER HIGH VOLUME SAMPLER

POST-TEST ORIFICE CALIBRATION

Hi Vol Serial No. 1052 Set No. I Date 1-23-89

Calibrated by Fred Sigleton

Orifice Delta P (inches H_2O) 0.20 in. H_2O

Barometric Pressure (inches Hg) 29.86 in. Hg.

METER READING START	METER READING STOP	TOTAL CU. FT. AT 60°F	TOTAL TIME MIN.	ORIFICE TEMP. °F	CFM AT 60°F
8180	9552	1372	56.46	77°F	24.300

B. RADER HI VOLUME SAMPLER

1. Velocity Pressure Meter and Orifice Pressure Meter Accuracy Check

Hi Vol Serial No._____ Set No._____ Date_____

Signature_____ Name of Company tested_____

a. Velocity Pressure Meter Check

Inclined Manometer Reading	.5	1.0	1.5	2.0	2.5
Velocity Pressure Meter Reading					

b. Orifice Pressure Meter Check

Inclined Manometer Reading	.5	1.0	1.5	2.0
Orifice Pressure Meter Reading				

2. Thermometer

a. Compared with mercury-in-glass_____

3. Orifice Meter Calibration

Hi Vol Serial No. 1052 Set No. I Date 5/16/86

Signature Fred Sylvester Name of Company tested_____

a. Flow Data Worksheet

ORIFICE DELTA p H_2O	X 100 METER START	X 100 METER STOP	TOTAL CU. FT. AT 60°F	TOTAL TIME	ORIFICE TEMP. F.	BAROMETER	CFM @ 60°F
2.0	69555	70559	1000	13.506	72°	29.72	74.337
1.9	70637	71641	1000	13.816			72.669
1.8	71700	72732	1000	14.500			71.172
1.7	72810	73813	1000	14.750			68.000
1.6	73881	74884	1000	15.000			66.867
1.5	75001	76004	1000	15.567			64.431
1.4	76043	77046	1000	16.339			61.387
1.3	77134	78137	1000	16.601			60.418
1.2	78215	79219	1000	17.440		29.69	57.569
1.1	79267	80270	1000	17.798			56.355
1.0	80377	81380	1000	18.695	73°		53.651
.9	81448	81953	500	9.982			50.591
.8	82031	82536	500	10.527			47.972
.7	82595	83100	500	11.282			44.767
.6	83139	83645	500	12.107			41.811
.5	83703	84209	500	13.253	74°		38.180
.4	84277	84782	500	14.992		29.67	33.685
.3	84831	85336	500	17.158			29.432
.25	85394	85695	300	10.955			27.476
.2	85734	86016	300	11.697			24.109
.15	86045	86356	300	14.215	73°		21.878
.1	86385	86696	300	16.970			18.326
.05	86764	87065	300	23.780			12.458

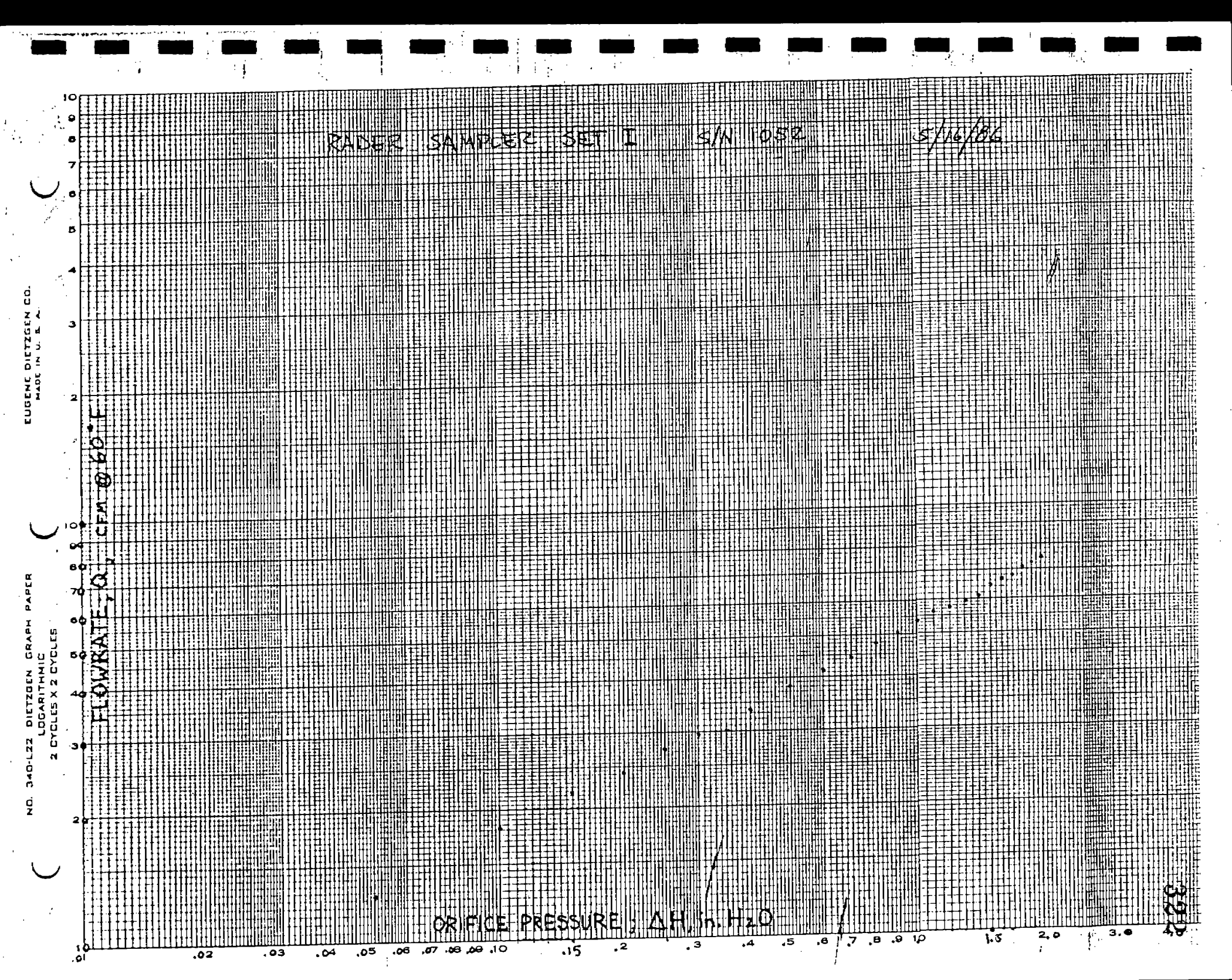
RADER SAMPLER SET I S/N 1052 5/16/86
FLOWRATE, Q, CFM @ 68°F
ORIFICE PRESSURE, ΔH, in. H2O
EUGENE DIETZGEN CO.
MADE IN U. S. A.
NO. 340-LZ2 DIETZGEN GRAPH PAPER
LOGARITHMIC
2 CYCLES X 2 CYCLES

RADER HIGH VOLUME SAMPLER

POST-TEST ORIFICE CALIBRATION

Hi Vol Serial No. 1087 Set No. II Date 1-23-89

Calibrated by Fred Sigleton

Orifice Delta P (inches H_2O) 0.20 in. H_2O

Barometric Pressure (inches Hg) 29.86 in. Hg

METER READING START	METER READING STOP	TOTAL CU. FT. AT 60°F	TOTAL TIME MIN.	ORIFICE TEMP. °F	CFM AT 60°F
6688	7790	1102	47.66	77°F	23.120

B. RADER HI VOLUME SAMPLER

1. Velocity Pressure Meter and Orifice Pressure Meter Accuracy Check

Hi Vol Serial No._____ Set No._____ Date_____

Signature_____ Name of Company tested_____

a. Velocity Pressure Meter Check

Inclined Manometer Reading	.5	1.0	1.5	2.0	2.5
Velocity Pressure Meter Reading	____	____	____	____	____

b. Orifice Pressure Meter Check

Inclined Manometer Reading	.5	1.0	1.5	2.0
Orifice Pressure Meter Reading	____	____	____	____

2. Thermometer

a. Compared with mercury-in-glass_____

3. Orifice Meter Calibration

Hi Vol Serial No. 1087 Set No. II Date 5/15/86

Signature Alvin P. Pratt Name of Company tested_____

a. Flow Data Worksheet

ORIFICE DELTA p H_2O	X 100 METER START	X 100 METER STOP	TOTAL CU. FT. AT 60°F	TOTAL TIME	ORIFICE TEMP. F.	BAROMETER	CFM @ 60°F
2.0	50263	51267	1000	14.495	76°	29.62	69.265
1.9	51384	52387	1000	14.800	77°		67.770
1.8	52503	53506	1000	15.200			65.987
1.7	53564	54567	1000	15.733			63.751
1.6	54644	55646	1000	16.187			61.902
1.5	55705	56707	1000	16.813			59.597
1.4	56765	57767	1000	17.365		29.61	57.702
1.3	57826	58828	1000	17.702			56.604
1.2	58896	59898	1000	18.602			53.866
1.1	59946	60948	1000	19.648			50.998
1.0	61026	62028	1000	20.185			49.641
.9	62077	63083	500	10.733			47.144
.8	62632	63147	500	11.707			43.991
.7	63206	63718	500	12.038		29.60	42.034
.6	63750	64256	500	12.855			39.362
.5	64305	64811	500	14.432			35.061
.4	64870	65375	500	16.003			31.557
.3	65404	65910	500	18.235			27.749
.25	65930	66232	300	11.883			25.414
.2	66261	66562	300	13.218	76°	29.59	22.772
.15	66582	66883	300	14.433			20.157
.1	66913	67214	300	18.003			16.719
.05	67234	67535	300	24.840			12.116

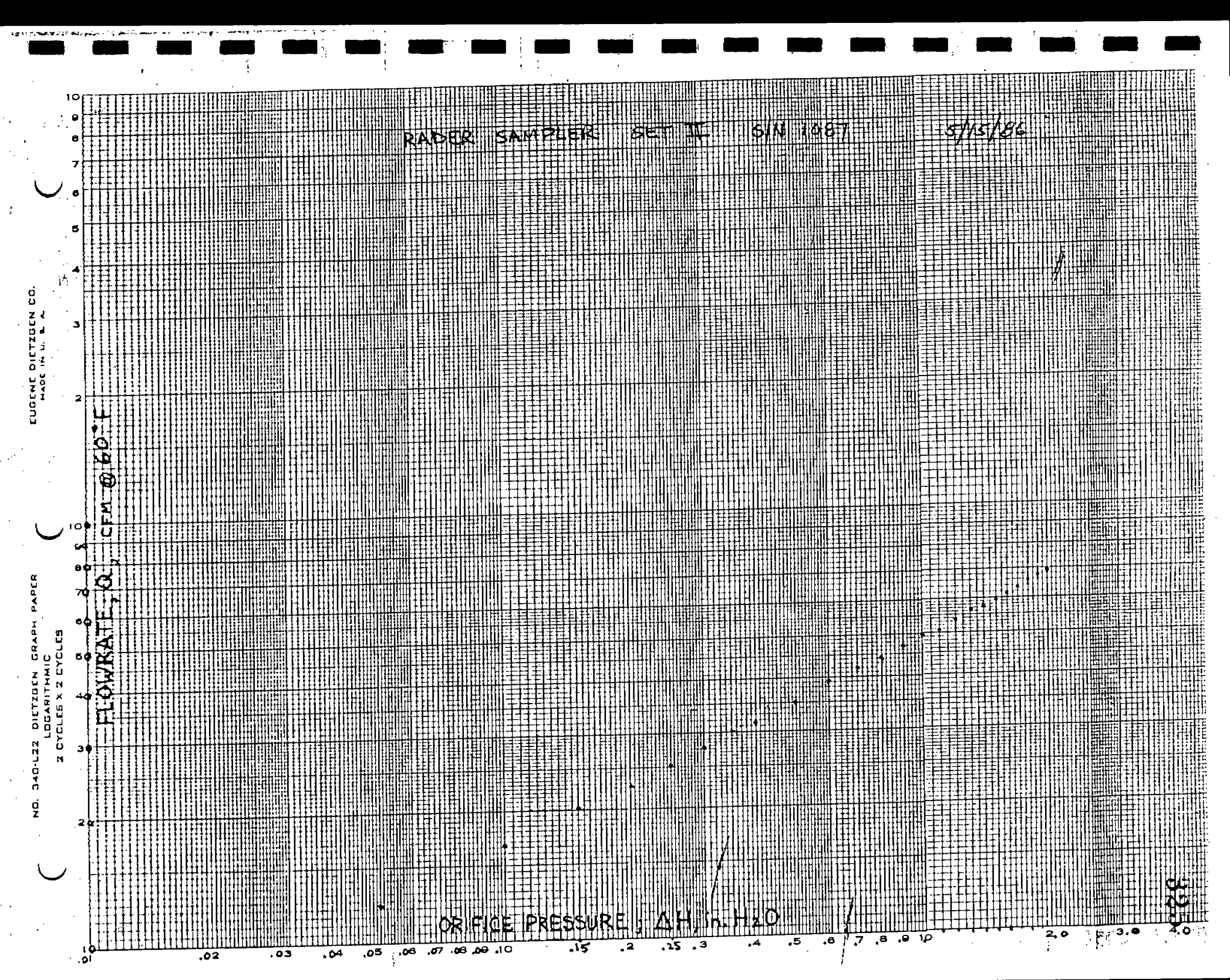
RADER SAMPLER SET II S/N 1087 5/15/86
FLOWRATE, Q, CFM @ 60°F
ORIFICE PRESSURE, ΔH, in. H2O
EUGENE DIETZGEN CO.
NO. 340-L22 DIETZGEN GRAPH PAPER
LOGARITHMIC
2 CYCLES X 2 CYCLES

B. RADER HI VOLUME SAMPLER

1. Velocity Pressure Meter and Orifice Pressure Meter Accuracy Check

Hi Vol Serial No. 1057 & 1082 Set No. I & II Date 1-24-89

Signature [signature] Name of Company tested HALLS GIN Co.

SET II

a. Velocity Pressure Meter Check 001M

Inclined Manometer Reading	.20	.40	.60	.80	1.0
Velocity Pressure Meter Reading	.20	.40	.60	.80	1.0

b. Orifice Pressure Meter Check 002M

Inclined Manometer Reading	.60	1.00	1.50	2.0
Orifice Pressure Meter Reading	0.5	1.0	1.5	2.0

SET I

a. Velocity Pressure Meter Check 003M

Inclined Manometer Reading	.20	.40	.60	.80	1.00
Velocity Pressure Meter Reading	.20	.40	.59	.80	1.00

b. Orifice Pressure Meter Check 004M

Inclined Manometer Reading	.10	.20	.40	.50
Orifice Pressure Meter Reading	.10	.20	.40	.50

a. Velocity Pressure Meter Check 005M

Inclined Manometer Reading	1.0	2.0	3.0	4.0	___
Velocity Pressure Meter Reading	1.00	1.98	2.95	4.00	___

b. Orifice Pressure Meter Check (0-4)

Inclined Manometer Reading	1.0	2.0	3.0	4.0
Orifice Pressure Meter Reading	1.00	1.98	2.99	3.95

a. Velocity Pressure Meter Check 007M

Inclined Manometer Reading	.20	.40	.60	.80	1.00
Velocity Pressure Meter Reading	.20	.40	.61	.81	1.00

b. Orifice Pressure Meter Check 008M

Inclined Manometer Reading	.10	.20	.30	.40
Orifice Pressure Meter Reading	.10	.20	.29	.39

THERMOMETER CALIBRATION DATA

Date 1-23-89 Calibrator Fred Singleton

Reference: mercury-in-glass ASTM A02191 other _____

Ambient Temperature 75.2°F

Thermometer I.D.	Reference Temp. °F	Thermometer Temp. °F	Temperature Difference, °F
SS-15 (SET I orifice thermometer)	75.2°	74°	- 1.2°
SS-14 (SET II orifice thermometer)		75°	- 0.2°
SS-19 (0 - 125°)		75°	- 0.2°
SS-35 (small 0-220°)		74°	- 1.2°

* NOTE: THERMOMETERS USED AT HALLS GIN CO TESTS

Nozzle Calibration Data Form

Nozzle identification no. SET I SMALL / SET II SMALL Calibrated by [signature]

Date	D_1, (in.), (mm)	D_2, (in.), (mm)	D_3, (in.), (mm)	ΔD, (in.), (mm)	D_{avg} in., (mm)
10/24/88	1.117	1.116	1.116	0.001	1.116
10/24/88	0.937	0.938	0.936	0.002	0.937

where:

$D_{1,2,3}$ = Three different nozzle diameters, in., each diameter measured to nearest 0.0001 in.

ΔD = Maximum difference between any two diamerers, in., $\Delta D \leq 0.004$ in.

D_{avg} = Average of D_1, D_2, and D_3.

Note: Nozzles must be recalibrated after any visible damage and/or repairs. Knife edge must be free of nicks or dents ≥ 0.004 in.

D. COTTON GINS (New & Existing)

1. No person shall cause or permit the emission of particulate matter in any one hour from any cotton gin operation in excess of the amount shown in Table 4 for the process weight per hour allocated to such operation. Particulate matter emissions subject to this Part include process emissions and wigwam or incinerator emissions if any; provided, however, that this shall in no way relieve or affect the application of Chapters IV, V, and VI to cotton gin operations.

2. Where the nature of any process or operation or the design of any equipment is such as to permit more than one interpretation of this Part, the interpretation that results in the minimum value for allowable emission shall apply.

3. For purposes of this Part, the total process weight from all similar process units at a plant or premises shall be used for determining the maximum allowable emission of particulate matter that passes through a stack or stacks.

4. The owner or operator of a cotton gin which was in operation or under construction prior to January 1, 1973, shall meet the standards of this subsection by July 1, 1975. The owner or operator of a cotton gin on which construction begins after January 1, 1973, shall meet the standards of this subsection at the time the operation of such gin commences.

TABLE 4 ALLOWABLE PARTICULATE MATTER EMISSION BASED ON PROCESS WEIGHT RATE FOR COTTON GINS

Process Wt. Rate (lb/hr)	Allowable Emission Rate (lb/hr)	Process Weight Rate (lb/hr)	Allowable Emission Rate (lb/hr)
1,000	1.6	9,000	13.7
1,500	2.4	10,000	15.2
2,000	3.1	12,000	18.2
2,500	3.9	14,000	21.2
3,000	4.7	16,000	24.2
3,500	5.4	18,000	27.2
4,000	6.2	20,000	30.1
5,000	7.7	30,000	44.9
6,000	9.2	40,000	59.7
7,000	10.7	50,000	64.0
8,000	12.2	60,000 or more	67.4

The emission rate for a cotton gin intermediate between those shown on Table 4 shall be determined by linear interpolation.