Note: This is a reference cited in *AP 42, Compilation of Air Pollutant Emission Factors, Volume I Stationary Point and Area Sources.* AP42 is located on the EPA web site at www.epa.gov/ttn/chief/ap42/

The file name refers to the reference number, the AP42 chapter and section. The file name "ref02_c01s02.pdf" would mean the reference is from AP42 chapter 1 section 2. The reference may be from a previous version of the section and no longer cited. The primary source should always be checked.

Background Report Reference

AP-42 Section Number: 9.9.1

Background Report Section: 4

Reference Number: 20

Title: Standards Support and Environmental Impact Statement VolumeI: Proposed Standards of Performance for Grain Elevator Industry

EPA, RTP

January 1977

AP-42 Section 9.9.1
Reference
Report Sect. 4
Reference 20

EPA-450/2-77-001a
January 1977

STANDARDS SUPPORT AND ENVIRONMENTAL IMPACT STATEMENT VOLUME 1: PROPOSED STANDARDS OF PERFORMANCE FOR GRAIN ELEVATOR INDUSTRY

U.S. ENVIRONMENTAL PROTECTION AGENCY
Office of Air and Waste Management
Office of Air Quality Planning and Standards
Research Triangle Park, North Carolina 27711

Review of: SSEIS for Grain Elevator Industry

· proposed standards are in terms of opacity

truck unloading ⇒ 0.6 lb/ton average
railcar unloading ⇒ 1.3 lb/ton
barge unloading ⇒ 1.7 lb/ton
screens ⇒ 3.2
cleaning systems ⇒ 6.0
handling ⇒ 6.0
counterflow dryers ⇒ 0.5
rack dryers ⇒ 4.0
hopper car loading ⇒ 0.27
boxcar loading ⇒ 0.27
barge loading ⇒ 1.2
ship loading ⇒ 1.2

controlled factors are given for several sources

most factors are from ref. #1 of AP-42 section

EPA-450/2-77-001a

STANDARDS SUPPORT AND ENVIRONMENTAL IMPACT STATEMENT VOLUME 1: PROPOSED STANDARDS OF PERFORMANCE FOR GRAIN ELEVATOR INDUSTRY

Emission Standards and Engineering Division

U.S. ENVIRONMENTAL PROTECTION AGENCY
Office of Air and Waste Management
Office of Air Quality Planning and Standards
Research Triangle Park, North Carolina 27711

January 1977

This report has been reviewed by the Emission Standards and Engineering Division, Office of Air Quality Planning and Standards, Office of Air and Waste Management, Environmental Protection Agency, and approved for publication. Mention of company or product names does not constitute endorsement by EPA. Copies are available free of charge to Federal employees, current contractors and grantees, and non-profit organizations—as supplies permit—from the Library Services Office, Environmental Protection Agency, Research Triangle Park, North Carolina 27711; or may be obtained, for a fee, from the National Technical Information Service, 5285 Port Royal Road, Springfield, Virginia 22161.

Draft

Standards Support and
Environmental Impact Statement

Grain Elevators

Type of Action: Administrative

Prepared by

Don R Goodwin

Nov 17, 1976

Don R. Goodwin, Director
Emission Standards and Engineering Division
Environmental Protection Agency
Research Triangle Park, N. C. 27711

(Date)

Approved by

Roger Strelow

12-14-76

Roger Strelow
Assistant Administrator for Air and Waste Management
Environmental Protection Agency
401 M Street, S.W.
Washington, D. C. 20460

(Date)

Draft Statement Submitted to Council on Environmental Quality
in

January 1977

(Date)

Additional copies may be obtained or reviewed at:

Public Information Center (PM-215)
Environmental Protection Agency
Washington, D. C. 20460

INTRODUCTION

Standards of performance under section 111 of the Clean Air Act are proposed following a detailed investigation of air pollution control methods available to the affected industry and the impact of their costs on the industry. This document summarizies the information obtained from such a study of the grain elevator industry. Its purpose is to explain in detail the background and basis of the proposed standards and to facilitate analysis of the proposed standards by interested persons, including those who may not be familiar with the many technical aspects of the industry. To obtain additional copies of this document or the Federal Register notice of proposed standards, write to the Public Information Center (PM-215), Environmental Protection Agency, Washington, D. C. 20460 (specify name of document).

AUTHORITY FOR THE STANDARDS

Standards of performance for new stationary sources are developed under section 111 of the Clean Air Act (42 U.S.C. 1857c-6), as amended in 1970. Section 111 requires the establishment of standards of performance for new stationary sources of air pollution which ". . .may contribute significantly to air pollution which causes or contributes to the endangerment of public health or welfare." The Act requires that standards of performance for such

sources reflect ". . .the degree of emission limitation achievable through the application of the best system of emission reduction which (taking into account the cost of achieving such reduction) the Administrator determines has been adequately demonstrated." The standards apply only to stationary sources, the construction or modification of which commences after regulations are proposed by publication in the Federal Register.

Section 111 prescribes three steps to follow in establishing standards of performance.

1. The Administrator must identify those categories of stationary sources for which standards of performance will ultimately be promulgated by listing them in the Federal Register.
2. The regulations applicable to a category so listed must be proposed by publication in the Federal Register within 120 days of its listing. This proposal provides interested persons an opportunity for comment.
3. Within 90 days after proposal, the Administrator must promulgate standards with any alterations he deems appropriate.

Standards of performance, by themselves, do not guarantee protection of health or welfare; that is, they are not designed to achieve any specific air quality levels. Rather, they are designed to reflect best demonstrated technology (taking into account costs) for the affected sources. The overriding purpose

of the collective body of standards is to maintain existing air quality and to prevent new pollution problems from developing.

Previous legal challenges to standards of performance have resulted in several court decisions[1,2] of importance in developing future standards. In those cases, the principal issues were whether EPA: (1) made reasoned decisions and fully explained the basis of the standards, (2) made available to interested parties the information on which the standards were based, and (3) adequately considered significant comments from interested parties.

Among other things, the court decisions established: (1) that preparation of an environmental impact statement is not necessary for standards developed under section 111 of the Clean Air Act because under this section EPA must consider any counter-productive environmental effects of a standard in determining what system of control is "best;" (2) in considering costs it is not necessary to provide a cost-benefit analysis; (3) EPA is not required to justify standards that require different levels of control in different industries unless such different standards may be unfairly discriminatory; and (4) it is sufficient for EPA to show that a standard can be achieved rather than that it has been achieved by existing sources.

Promulgation of standards of performance does not prevent State or local agencies from adopting more stringent emission limitations for the same sources. On the contrary, section 116 of the Act (42 U.S.C. 1857-D-1) makes clear that States and other political subdivisions may enact more restrictive standards.

Furthermore, in heavily polluted areas more stringent standards may be required under section 110 of the Act (42 U.S.C. 1857c-5) in order to attain or maintain National Ambient Air Quality Standards prescribed under section 109 (42 U.S.C. 1857c-4). Finally, section 116 makes clear that a State may not adopt or enforce less stringent new source performance standards than those adopted by EPA under section 111.

Although standards of performance are normally structured in terms of numerical emission limits where feasible, alternative approaches are sometimes necessary. In some cases physical measurement of emissions from a new source may be impractical or exorbitantly expensive. For example, emissions of hydrocarbons from storage vessels for petroleum liquids occur during storage and during tank filling. The nature of the emissions (high concentrations for short periods during filling and low concentrations for longer periods during storage) and the configuration of storage tanks make direct emission measurement highly impractical. Therefore, a more practical approach to standards of performance for storage vessels has been equipment specifications.

SELECTION OF CATEGORIES OF STATIONARY SOURCES

Section 111 directs the Administrator to publish and from time to time revise a list of categories of sources for which standards of performance are to be proposed. A category is to be selected ". . .if [the Administrator] determines it may contribute significantly to air pollution which causes or contributes to the endangerment of public health or welfare."

Considerable attention has been given to the development of a methodology for assigning priorities to various source categories. In brief, the approach that has evolved is as follows: Specific areas of emphasis are identified by considering the broad strategy of the Agency for implementing the Clean Air Act. Often, these "areas" are actually pollutants which are primarily emitted by stationary sources. Source categories which emit these pollutants are then evaluated and ranked taking into account such factors as (1) the level of emission control (if any) already required by State regulations; (2) estimated levels of control that might result from standards of performance for the source category; (3) projections of growth and replacement of existing facilities for the source category; and (4) the estimated incremental amount of air pollution that could be prevented, in a preselected future year, by standards of performance for the source category.

An estimate is then made of the time required to develop a standard. In some cases, it may not be feasible to develop a standard immediately for a source category with a high priority. This circumstance might occur because a program of research and development is needed to develop control techniques or because techniques for sampling and measuring emissions may require refinement.

Selection of a source category for standards development leads to another major decision: determination of the types of sources or facilities to which standards will apply. A source category often has several facilities that cause air pollution. Emissions

from some of these facilities may be insignificant or very expensive to control. An investigation of economics may show that, within the costs that an owner could reasonably afford, air pollution control is better served by applying standards to the most severe pollution problems. For this reason (or perhaps because there may be no adequately demonstrated system to control emissions from certain facilities), standards often do not apply to all sources within a category. For similar reasons, the standards may not apply to all air pollutants emitted by such sources. Consequently, although a source category may be selected to be covered by standards of performance, not all pollutants or facilities within that source category may be covered by the standards.

PROCEDURE FOR DEVELOPMENT OF STANDARDS OF PERFORMANCE

Congress mandated that sources regulated under section 111 of the Clean Air Act utilize the best system of air pollution control (considering cost) that has been adequately demonstrated at the time of their design and construction. In so doing, Congress sought to:

1. Maintain existing air quality
2. Prevent new air pollution problems, and
3. Ensure uniform national standards for new facilities.

Standards of performance, therefore, must (1) realistically reflect best demonstrated control practice; (2) adequately consider the cost of such control; (3) be applicable to existing sources that are modified as well as new installations; and (4) meet these

conditions for all variations of operating conditions being considered anywhere in the country.

The objective of a program for developing standards of performance is to identify the best system of emission reduction which "has been adequately demonstrated (considering costs)." The legislative history of section 111 and the court decisions referred to earlier make clear that the Administrator's judgment of what is adequately demonstrated is not limited to systems that are in actual routine use. Consequently, the investigation may include a technical assessment of control systems which have been adequately demonstrated but for which there is limited operational experience. In most cases, determination of the "degree of emission limitation achievable" is based on results of tests of emissions from existing sources. This has required worldwide investigation and measurement of emissions from control systems. Other countries with heavily populated, industrialized areas have sometimes developed more effective systems of control than those in the United States.

Since the best demonstrated systems of emission reduction may not be in widespread use, the data base upon which standards are developed may be somewhat limited. Test data on existing well-controlled sources are an obvious starting point in developing emission limits for new sources. However, since the control of existing sources generally represents retrofit technology or was originally designed to meet an existing State or local regulation, new sources may be able to meet more stringent emission standards. Other information, however, is also considered and judgment is necessarily involved in developing standards.

A process for the development of a standard has evolved. In general, it follows the guidelines below.

1. Emissions from existing well-controlled sources are measured.
2. Data on emissions from such sources are assessed with consideration for such factors as: (a) the representativeness of the source tested (feedstock, operation, size, age, etc.); (b) the age and maintenance of the control equipment tested (and possible degradation in the efficiency of control of similar new equipment even with good maintenance procedures); (c) the design uncertainties for the type of control equipment being considered; and (d) the degree of uncertainty that new sources will be able to achieve similar levels of control.
3. During development of the standards, information from pilot and prototype installations, guarantees by vendors of control equipment, contracted (but not yet constructed) projects, foreign technology, and published literature are considered, especially for sources where "emerging" technology appears significant.
4. Where possible, standards are developed which permit the use of more than one control technique or licensed process.
5. Where possible, standards are developed to encourage (or at least permit) the use of process modifications or new processes as a method of control rather than "add-on" systems of air pollution control.

6. Where possible, standards are developed to permit systems capable of controlling more than one pollutant (for example, a scrubber can remove both gaseous and particulate matter emissions, whereas an electrostatic precipitator is specific to particulate matter).

7. Where appropriate, standards for visible emissions are developed in conjunction with concentration/mass emission standards. The opacity standard is established at a level which will require proper operation and maintenance of the emission control system installed to meet the concentration/mass standard on a day-to-day basis, but not require the installation of a control system more efficient or expensive than that required by the concentration/mass standard. In some cases, however, it is not possible to develop concentration/mass standards, such as with sources of fugitive emissions. In these cases, opacity standards or equipment standards may be developed to limit emissions.

CONSIDERATION OF COSTS

Section 111 of the Clean Air Act requires that costs be considered in developing standards of performance. This requires an assessment of the possible economic effects of implementing various levels of control technology in new plants within a given industry. The first step in this analysis requires the generation of estimates of installed capital costs and annual operating costs for various demonstrated control

systems, with each control system alternative having a different overall control capability. The final step in the analysis is to determine the economic impact of the various control alternatives upon a new plant in the industry. The fundamental question to be addressed is whether or not a new plant would be constructed if a certain level of control costs will be incurred. Other aspects that are analyzed are the effects of control costs upon product prices and product supplies, and producer profitability.

The economic impact of a proposed standard upon an industry is usually addressed both in absolute terms and by comparison with the control costs that would be incurred as a result of compliance with typical existing State control regulations. This incremental approach is taken since a new plant would be required to comply with State regulations in the absence of a Federal standard of performance. This approach requires a detailed analysis of the impact upon the industry resulting from the cost differential that exists between a standard of performance and the typical State standard.

The costs for control of air pollutants are not the only control costs considered. Total environmental costs for control of water pollutants as well as air pollutants are analyzed wherever possible.

A thorough study of the profitability and price-setting mechanisms of the industry is essential to the analysis so that an accurate estimate of potential adverse economic impacts can be made. It is also essential to know the capital requirements placed on plants

in the absence of Federal standards of performance so that the additional capital requirements necessitated by these standards can be placed in the proper perspective. Finally, it is necessary to recognize any constraints on capital availability within an industry as this factor also influences the ability of new plants to generate the capital required for installation of the additional control equipment needed to meet the standards of performance.

CONSIDERATION OF ENVIRONMENTAL IMPACTS

Section 102(2)(c) of the National Environmental Policy Act (NEPA) of 1969 (PL 91-190) requires Federal agencies to prepare detailed environmental impact statements on proposals for legislation and other major Federal actions significantly affecting the quality of the human environment. The objective of NEPA is to build into the decision-making process of Federal agencies a careful consideration of all environmental aspects of proposed actions.

As mentioned earlier, in a number of legal challenges to standards of performance for various industries, the Federal Courts of Appeals have held that environmental impact statements need not be prepared by the Agency for proposed actions under section 111 of the Clean Air Act. Essentially, the Federal Courts of Appeals have determined that "...Section 111 of the Clean Air Act, properly construed, requires the functional equivalent of a NEPA impact statement" in the sense that the criteria "...the best system of emission reduction," "...require(s) the Administrator to take into account counter-productive environmental effects on a proposed standard, as well as economic costs to the industry..."

On this basis, therefore, the Courts "...establish(ed) a narrow exemption from NEPA for EPA determinations under section 111."[1,2]

In addition to these judicial determinations, the Energy Supply and Environmental Coordination Act (ESECA) of 1974 (PL 93-319) specifically exempted proposed actions under the Clean Air Act from NEPA requirements. According to section 7(c)(1), "No action taken under the Clean Air Act shall be deemed a major Federal action significantly affecting the quality of the human environment within the meaning of the National Environmental Policy Act of 1969."

The Agency has concluded, however, that the preparation of environmental impact statements could have beneficial effects on certain regulatory actions. Consequently, while not legally required to do so by section 102(2)(c) of NEPA, environmental impact statements will be prepared for various regulatory actions, including standards of performance developed under section 111 of the Clean Air Act. This voluntary preparation of environmental impact statements, however, in no way legally subjects the Agency to NEPA requirements.

To implement this policy, therefore, a separate section is included in this document which is devoted solely to an analysis of the potential environmental impacts associated with the proposed standards. Both adverse and beneficial impacts in such areas as air and water pollution, increased solid waste disposal and increased energy consumption are identified and discussed.

IMPACT ON EXISTING SOURCES

Standards of performance may affect existing sources in either of two ways. Section 111 of the Act defines a new source as "any

stationary source, the construction or modification of which is commenced after the standards are proposed." Consequently, if an existing source is modified after proposal of the standards, with a subsequent increase in air pollution, it is subject to standards of performance. [Amendments to the general provisions of Subpart A of 40 CFR Part 60 to clarify the meaning of the term modification were promulgated on December 16, 1975 (40 FR 58416).]

Second, promulgation of a standard of performance requires States to establish standards of performance for existing sources in the same industry under section 111(d) of the Act; unless the standard for new sources limits emissions of a pollutant for which air quality criteria have been (or will be) issued under section 108 or one listed as a hazardous pollutant under section 112. If a State does not act, EPA must establish such standards. [General provisions outlining procedures for control of existing sources under section 111(d) have been promulgated on November 17, 1975, as Subpart B of 40 CFR Part 60 (40 FR 53340).]

REVISION OF STANDARDS OF PERFORMANCE

Congress was aware that the level of air pollution control achievable by any industry may improve with technological advances. Accordingly, section 111 of the Act provides that the Administrator may revise such standards from time to time. Although standards proposed and promulgated by EPA under section 111 are designed to require installation of the "...best system of emission reduction...(taking into account the cost)..." the standards are reviewed periodically.

Revisions are proposed and promulgated as necessary to assure that the standards continue to reflect the best systems of emission control as they become available in the future. Such revisions are not retroactive but apply to stationary sources constructed or modified after proposal of the revised standards.

REFERENCES

1. Portland Cement Association vs. Ruckelshaus, 486 F. 2nd 375 (D.C. Cir. 1973).

2. Essex Chemical Corp. vs. Ruckelshaus, 486 F. 2nd 427 (D.C. Cir. 1973).

TABLE OF CONTENTS

	Page
INTRODUCTION	v
TABLE OF CONTENTS	xix
LIST OF FIGURES	xxii
LIST OF TABLES	xxiii
CHAPTER 1. SUMMARY	1-1
1.1 PROPOSED STANDARDS	1-1
1.2 ENVIRONMENTAL IMPACT	1-4
1.3 INFLATION IMPACT	1-7
CHAPTER 2. THE GRAIN ELEVATOR INDUSTRY	2-1
2.1 GENERAL	2-1
2.2 PROCESSES AND EMISSIONS	2-15
REFERENCES	2-40
CHAPTER 3. SUMMARY OF THE PROCEDURE FOR THE DEVELOPMENT OF THE PROPOSED STANDARDS	3-1
3.1 LITERATURE REVIEW AND INDUSTRIAL CONTACTS	3-1
3.2 PLANT INSPECTIONS	3-1
3.3 SAMPLING AND ANALYTICAL TECHNIQUES	3-2
3.4 EMISSIONS MEASUREMENT PROGRAM	3-4
REFERENCES	3-6
CHAPTER 4. EMISSION CONTROL TECHNOLOGY	4-1
4.1 RECEIVING (UNLOADING)	4-4
4.2 HANDLING AND CONVEYING EQUIPMENT	4-12
4.3 DRYING	4-18
4.4 LOADING	4-22

Page

4.5 ALTERNATIVE CONTROL SYSTEMS 4-30

REFERENCES 4-34

CHAPTER 5. EMISSION DATA TO SUBSTANTIATE THE PROPOSED STANDARDS 5-1

5.1 PARTICULATE EMISSION DATA - FABRIC FILTERS 5-1

5.2 PARTICULATE EMISSION DATA - DRYERS 5-5

5.3 VISIBLE EMISSION/OPACITY DATA 5-5

REFERENCES 5-35

CHAPTER 6. ECONOMIC IMPACT 6-1

6.1 CHARACTERIZATION OF THE INDUSTRY 6-1

6.2 CONTROL COSTS AND COST EFFECTIVENESS FOR NEW/RECONSTRUCTED SOURCES 6-23

6.3 ECONOMIC IMPACT ANALYSIS FOR NEW AND RECONSTRUCTED SOURCES 6-43

REFERENCES 6-74

CHAPTER 7. ENVIRONMENTAL EFFECTS 7-1

7.1 AIR POLLUTION IMPACTS 7-2

7.2 WATER POLLUTION IMPACT. 7-13

7.3 SOLID WASTE IMPACT 7-13

7.4 NOISE AND RADIATION IMPACT 7-16

7.5 ENERGY IMPACTS 7-16

7.6 OTHER ENVIRONMENTAL CONCERNS 7-21

REFERENCES 7-24

CHAPTER 8. RATIONALE FOR THE PROPOSED STANDARDS 8-1

8.1 SELECTION OF SOURCE FOR CONTROL 8-1

8.2 SELECTION OF POLLUTANTS AND AFFECTED FACILITIES . . 8-3

8.3 SELECTION OF BEST SYSTEM OF EMISSION REDUCTION CONSIDERING COSTS 8-9

Page

8.4 SELECTION OF THE FORMAT AND EMISSION LIMITS OF THE PROPOSED STANDARDS 8-33

8.5 MODIFICATION AND RECONSTRUCTION CONSIDERATIONS . . . 8-42

8.6 SELECTION OF MONITORING REQUIREMENTS 8-44

8.7 SELECTION OF PERFORMANCE TEST METHODS 8-45

APPENDIX A EVOLUTION OF THE PROPOSED STANDARDS A-1

APPENDIX B ENVIRONMENTAL IMPACT CONSIDERATIONS B-1

APPENDIX C EMISSION SOURCE TEST DATA SUMMARY C-1

REFERENCES FOR APPENDIX C C-24

APPENDIX D METHODOLOGY FOR ESTIMATING THE IMPACT OF GRAIN ELEVATOR FACILITIES ON AIR QUALITY D-1

LIST OF FIGURES

		Page
2-1	Flow of Grain from Farm to Market	2-4
2-2	Terminal Elevator	2-13
2-3	Truck Receiving	2-18
2-4	Railcar Receiving	2-21
2-5	Grain Cleaning	2-27
2-6	Grain Dryers	2-30
2-7	Truck and Railcar Loading	2-32
2-8	Barge and Ship Loading	2-36
4-1	Truck Unloading Control System	4-5
4-2	Railcar Unloading Control Systems	4-7
4-3	Boxcar Unloading Control System	4-10
4-4	Barge Receiving Control System	4-11
4-5	Transfer Point Control System	4-14
4-6	Grain Handling and Cleaning Control System	4-15
4-7	Elevator Leg	4-16
4-8	Rack Dryer with Screen Filter	4-20
4-9	Dryer Emissions Versus Screen Size	4-21
4-10	Truck Loading Control System	4-23
4-11	Hopper Car Loading Control System	4-25
4-12	Control System for Boxcar Loading	4-27
4-13	Barge or Ship Loading Control System	4-29
4-14	State Regulations Applicable to Grain Elevators	4-31
5-1	Particulate Emissions from Processes Controlled by Fabric Filters	5-2
5-2	Visible Emission/Opacity Data Summary for Fugitive Particulate Emission Sources at Grain Elevators (Excluding Barge and Ship Unloading Equipment)	5-6
6-1	Control Costs as a Function of Annual Throughput	6-73

LIST OF TABLES

		Page
1-1	Summary of Proposed Standards	1-2
1-2	Matrix of Environmental and Economic Impacts of the Alternative Systems	1-5
2-1	Quantity and Value of Production of Major Grains	2-3
2-2	Number and Capacity of Warehouses Operating Under Uniform Grain Storage Agreement	2-6
2-3	Transportation Modes for Receipt and Shipment of Grain	2-10
4-1	Emission Control Devices at Existing Elevators	4-2
5-1	Summary of Visible Emission Data for Truck Unloading (Facility N)	5-9
5-2	Summary of Visible Emission Data for Truck Unloading (Facility A)	5-10
5-3	Summary of Visible Emission Data for Boxcar Unloading (Facility C)	5-11
5-4	Summary of Visible Emission Data for Barge Unloading (Facility D)	5-13
5-5	Summary of Visible Emission Data for Barge Unloading (Facility E)	5-14
5-6	Summary of Visible Emission Data for Barge Unloading (Facility E)	5-15
5-7	Summary of Visible Emission Data for Grain Handling (Facility O)	5-16
5-8	Summary of Visible Emission Data for Truck Loading (Facility P)	5-18
5-9	Summary of Visible Emission Data for Boxcar Loading (Facility Q)	5-19
5-10	Summary of Visible Emission Data for Hopper Car Loading (Facility R)	5-21
5-11	Summary of Visible Emission Data for Ship Loading (Facility J)	5-22
5-12	Summary of Visible Emission Data for Column Dryer (Facility S)	5-24
5-13	Summary of Visible Emission Data for Column Dryer (Facility T)	5-25
5-14	Summary of Visible Emission Data for Column Dryer (Facility U)	5-26
5-15	Summary of Visible Emission Data for Column Dryer (Facility V)	5-28
5-16	Summary of Visible Emission Data for Rack Dryer (Facility W)	5-29
5-17	Summary of Visible Emission Data for Rack Dryer (Facility X)	5-30
5-18	Summary of Visible Emission Data for Column Dryer (Facility Y)	5-32
5-19	Summary of Visible Emission Data for Fabric Filter (Facility A)	5-33
5-20	Summary of Visible Emission Data for Fabric Filter (Facility B)	5-34

Page

6-1 Concentration of Ownership of Country Elevators, Single and Multi-Unit Firms - 1967. 6-2
6-2 Domestic Consumption, Exports, Production and Carry-In Stocks of Major U.S. Grains. 6-6
6-3 Estimated Change in the U.S. Grain Elevator Industry Structure, 1975-1981 Without New Source Performance Standards. 6-12
6-4 Grain Prices Used in Model Plant Analysis. 6-15
6-5 Size Profile of Soybean Milling Plants 6-16
6-6 Size Profile of Dry Corn and Wheat Milling Plants. 6-18
6-7 Size Profile of Rice Milling Industry - 1967 6-20
6-8 Summary of Control Technologies on Affected Facilities . . . 6-28
6-9 Model Plant Characteristics for the Grain Elevator Industry 6-29
6-10 Tabulation of Capital and Annualized Costs for Alternative Controls for New Grain Elevator Sources. 6-31
6-11 Summary of Grain Elevator Annualized Costs for Alternative Levels of Control Technology/Grain Elevators 6-32
6-12 Summary of Incremental Costs for Alternative Levels of Control Technology Above State Requirements/Grain Elevators. 6-33
6-13 Model Plant Characteristics for Grain Processors/Control Requirements for Grain Handling Facilities 6-35
6-14 Tabulation of Capital and Annualized Costs for New Sources/Grain Processors, Commercial Rice Dryers 6-36
6-15 Summary of Grain Processors' and Commercial Rice Dryers' Costs for Alternative Control Levels 6-38
6-16 Summary of Grain Processors' and Commercial Rice Dryers' Incremental Costs for Alternative Control Levels Above State Requirements 6-39
6-17 Summary of Cost-Effectiveness for Grain Dryers 6-41
6-18 Grain Storage Elevators - Anticipated Number of New and Reconstructed Sources (January 1, 1976 to December 30, 1981). 6-46
6-19 Model Grain Distribution Costs (¢/Bu.) for Alternative Controls and Systems 6-50
6-20 Summary of the Impact of Alternatives Upon Construction of New Sources. 6-53
6-21 Incremental Capital Requirements for Controls at Alternative Control Levels 6-54
6-22 Model Soybean Processing Plant 6-57
6-23 Model Wheat Mill 6-59
6-24 Model Wet Corn Mill. 6-61
6-25 Model Dry Corn Mill. 6-63
6-26 Model Rice Mill. 6-66
6-27 Model Commercial Rice Dryer. 6-68

Page

7-1 Adverse Secondary Environmental Impacts of Individual Control Techniques Over SIP Requirements 7-3
7-2 Grain Elevator Emissions for Model Elevators with Alternative Control Systems 7-5
7-3 Estimated Incremental Annual Particulate Matter Emission Reduction for Model Plants with Alternative Control Systems Compared to Emissions Under Typical State Regulations, System 1 (lb/yr) 7-8
7-4 Estimated Maximum Ambient Ground Level Particulate Concentration ($\mu g/m^3$) 7-11
7-5 Solid Waste Disposal with Alternative Control Systems . . . 7-15
7-6 Calculated Energy Requirements to Operate Alternative Control Systems 7-17
7-7 Total and Incremental Pollution Control System Energy Requirements for Model Plants with Alternative Control Systems 7-20
7-8 Environmental Impact of No Standard 7-23
8-1 Alternative Controls for Column and Rack Dryers (2000 bu/hr Capacity) 8-13
C-1 Summary of Particulate Emission Data for Fabric Filter (Facility A). C-12
C-2 Summary of Particulate Emission Data for Fabric Filter (Facility B). C-13
C-3 Summary of Particulate Emission Data for Fabric Filter (Facility C). C-14
C-4 Summary of Particulate Emission Data for Fabric Filter (Facility D). C-15
C-5 Summary of Particulate Emission Data for Fabric Filter (Facility E). C-16
C-6 Summary of Particulate Emission Data for Fabric Filter (Facility F). C-17
C-7 Summary of Particulate Emission Data for Fabric Filter (Facility F). C-18
C-8 Summary of Particulate Emission Data for Fabric Filter (Facility G). C-19
C-9 Summary of Particulate Emission Data for Fabric Filter (Facility H). C-20
C-10 Summary of Particulate Emission Data for Fabric Filter (Facility I). C-21
C-11 Summary of Particulate Emission Data for Fabric Filter (Facility J). C-22
C-12 Summary of Particulate Emission Data for Fabric Filter (Facility K). C-23
D-1 Particulate Emission Sources at Grain Elevator Facilities . D-3
D-2 Emission Rate, Average Emission Height (weighted by emission rate), and Assumed Initial Plume Dimensions for Each Type of Grain Elevator and Level of Emission Control D-5
D-3 Estimated Ambient Ground-Level Particulate Concentrations at Specified Distances Downwind of Grain Elevator Facilities. D-8

1. SUMMARY

1.1 PROPOSED STANDARDS

Standards of performance for new and modified grain elevators are being proposed under authority of section 111 of the Clean Air Act. Particulate matter, the only significant pollutant emitted, will be controlled from these sources. Preceding the act of proposal has been the Administrator's determination that emissions from grain elevators contribute to the endangerment of the public health or welfare. In accordance with section 117 of the Clean Air Act, proposal of the standards was preceded by consultation with appropriate advisory committees, independent experts, industry representatives, and Federal departments and agencies.

The proposed standards limit emissions of particulate matter from eight affected facilities and the air pollution control devices which are used on these facilities. The eight affected facilities are: each truck unloading station, each railroad hopper car and boxcar unloading station, equipment at each barge and ship unloading station, all grain handling operations, each grain dryer, each truck loading station, each railroad hopper car and boxcar loading station, and each barge and ship loading station. These eight facilities account for virtually all of the particulate matter emissions from a grain elevator. A summary of the proposed standards is presented in Table 1-1. There are no stack monitoring requirements in the proposed standards because the costs involved were judged not to be reasonable by EPA.

Table 1-1. Summary of Proposed Standards

Affected Facilities and Air Pollution Control Devices	Proposed Standards
Truck Unloading Stations	0% Opacity
Railcar Unloading Stations	No Visible Emissions
Barge and Ship Unloading Equipment	Equipment Specifications
Handling Operations	0% Opacity
Dryers	(Column dryers would be considered in compliance with the standard provided the diameters of all column plate perforations do not exceed 2.1 mm [ca. 0.084 inch] and rack dryers would be in compliance provided all exhaust gases pass through a 50 or finer mesh screen filter.)
Truck Loading Stations	10% Opacity
Railcar Loading Stations	0% Opacity
Barge and Ship Loading Stations	10% Opacity - General Loading 15% Opacity - "Topping Off" Operations
Air Pollution Control Devices On These Affected Facilities	0.023 g/std. m^3 dry basis (0.01 gr/dscf) and 0% Opacity

The proposed standards apply to farm elevators, country elevators, terminal elevators, and commercial rice dryers which have grain leg capacities greater than 352 m^3/h (ca. 10,000 bu/hr) and to storage elevators at wheat flour mills, wet corn mills, dry corn mills (human consumption), rice mills, or soybean extraction plants. The proposed limits are: (1) 0.023 g/std. m^3 dry basis and zero percent opacity from air pollution control devices on any affected facility except grain dryers; (2) zero percent opacity from any truck unloading station, grain handling operation, railroad hopper car loading station or railroad boxcar loading station; (3) no visible emissions from any railroad hopper car unloading station or railroad boxcar unloading station; (4) ten percent opacity from any truck loading station; (5) ten percent opacity, except that the opacity may not exceed fifteen percent during topping-off operations, from any barge or ship loading station; (6) zero percent opacity from any grain grain (column dryers would be considered in compliance with the standard provided the diameters of all column plate perforations do not exceed 2.1 mm [ca. 0.084 inch] and rack dryers would be in compliance provided all exhaust gases pass through a 50 or finer mesh screen filter); (7) operation of a leg which is enclosed from the top (including the receiving hopper) to the center line of the bottom pulley, and ventilation of at least 32.1 actual cubic meters per cubic meter of grain handling capacity (ca. 40 ft^3/bushel) to a particulate control device on both sides of the leg and the grain receiving hopper, at any barge or ship unloading station.

1.2 ENVIRONMENTAL IMPACT

A summary of the beneficial and adverse environmental and economic impacts associated with the proposed standards and with the various alternative control systems that were considered are presented in this section. These impacts are discussed in detail in Chapter 7, Environmental Effects, and Chapter 6, Economic Impact. Table 1-2 is a matrix which summarizes these impacts.

Alternative system number 1 is the baseline system to which the impacts associated with the other alternative systems can be compared. Alternative system number 2 is the best demonstrated control technology, considering costs. Alternative system number 3 is the best possible control technology. In some cases, systems 2 and 3 are identical. These alternative systems are described in detail in Chapter 4, Emission Control Technology.

Large beneficial impacts on air quality will result from alternative systems 2 and 3 due to the reduction in particulate matter emissions. There are no impacts on water supply or treatment for these alternative systems because all of the air pollution control devices required are dry collector units. There will be a minimal adverse impact on solid waste collection and disposal due to the use of more efficient particulate collection devices. This is, however, considered negligible by EPA. Adverse energy impacts will be associated with each of the alternative systems. These impacts are considered small and result primarily

Table 1-2. Matrix of Environmental and Economic Impacts of the Alternative Systems

	AIR IMPACT	WATER IMPACT	SOLID WASTE IMPACT	ENERGY IMPACT	NOISE AND RADIATION IMPACTS	ECONOMIC IMPACT	INFLATIONARY IMPACT
SYSTEM NO. 1	0	0	0	0	0	0	0
SYSTEM NO. 2	+4	0	-1	-2	-1	-2	-1
SYSTEM NO. 3	+4	0	-1	-2	-1	-4	-1
DELAYED STANDARD	-3	0	+1	+2	+1	+2	+1
NO STANDARD	-4	0	+1	+2	+1	+2	+1

Key: + Beneficial Impact
- Adverse Impact

0 - No Impact
1 - Negligible Impact
2 - Small Impact
3 - Moderate Impact
4 - Large Impact

from the increased energy requirements of fabric filters over cyclone control devices. Impacts on noise levels due to the use of any of the alternative control systems have not been quantified. The control devices and exhaust fans at grain elevators are usually located outside of buildings at either roof or ground level. Although fans are noisy, they are already required for collection systems now used to meet existing state regulations. Therefore, any Federal standard will not introduce new noise problems but may slightly increase the existing noise levels. There are no known or anticipated radiation impacts from grain elevator operations. The economic impacts associated with alternative system 2 have been judged to be small. Costs were considered in determining the best demonstrated control technology for this system. Costs were not considered in determining the best possible control technology for alternative system 3 and the adverse economic impact is great.

Two additional alternatives have also been considered: the impact of delayed standards and the impact of no standards. In both cases the adverse impact on air quality would be moderate to large, since the new and modified facilities that would otherwise fall under the proposed standards would be allowed to emit particulate matter at existing levels. Other impacts due to these alternatives are negligible positive impacts on solid waste, and noise, and a small positive impact on economics and energy consumption.

1.3 INFLATION IMPACT

The costs associated with the proposed standards for new and modified facilities at grain elevators have been judged not to be of such magnitude to require an analysis of the inflationary impact. Screening criteria have been developed by EPA to be used in the impact analysis. These criteria have been outlined in an Agency publication and include:

(1) National annualized cost of compliance.

(2) Total added production cost in relation to sales price.

(3) Net national energy consumption increase.

(4) Added demands or decreased supplies of selected materials.

Should any of these guideline values listed under these criteria be exceeded, a full inflationary impact statement is required.

The EPA has determined that this document does not contain a major proposal requiring preparation of an Inflation Impact Statement under Executive Order 11821 and OMB Circular A-107.

2. THE GRAIN ELEVATOR INDUSTRY

2.1 GENERAL

2.1.1 Background Information

Grain elevators are used to condition and store grain as it moves from the farm to markets. In general, elevators are classed as either "country" or "terminal." The U. S. Department of Agriculture (USDA) distinguishes between country and terminal elevators on the basis that terminals furnish official weights; that is, each receipt or shipment is weighed under the supervision of a state inspector.

Country elevators generally receive grain or soybeans as they are harvested in fields within 10 to 20 miles of the elevator. They unload, weigh, and store the grain and may dry or clean it before shipment to terminal elevators or processors. Terminal elevators are classified into two groups, inland (or subterminals) and port terminals. Inland terminal elevators receive most of their grain from country elevators and ship to processors, other terminals, and exporters. One function of an inland terminal elevator is to store grain in quantity and upgrade it to meet buyer's specifications. They also dry and clean grain, as country elevators do, and also blend different grades of grain.[1/]

[1/] The USDA classifies each grain into six grades. No. 1 grade grains must meet specific minimum test weights (pounds per bushel) and maximum limits on the percent moisture, foreign material and other defects that lower its value.

Port terminals are defined as those located on major waterways or in seaports which export agricultural products. The port terminal provides the same basic functions as an inland terminal, but can also load ships and barges.

Plants which process grain also use elevators to receive and store the grain. These plants process grain into food or food intermediates for human or animal consumption. All of the same basic functions performed at country or terminal elevators are performed at storage elevators owned by processors. Shipment of grain, however, would be a rarity.

Table 2-1 shows the quantities and values of the principal feed grains (corn, oats, barley, and sorghum grains); food grains (wheat, rice, and rye); and soybeans produced on the farm since 1940.[1] The largest crop is corn with production about three times that of wheat, the second largest crop. Soybeans (actually an oil seed) now rank third in production and second in cash value. The farmer does not sell all of the grain he harvests. Substantial portions of some crops (especially feed grains) are retained for use as livestock feed and seed. In 1971, 57 percent of the feed grains (7.3 billion bushels of grain), 94 percent of the food grains, and 98 percent of the soybeans were sold by farmers to their various outlets.

Figure 2-1[2] shows the distribution of wheat, feed grains, and soybeans as they flow from farm to market. Although this figure is

TABLE 2-1

QUANTITY AND VALUE OF PRODUCTION OF MAJOR GRAINS[1]

	QUANTITY OF PRODUCTION (million bushels)							
	1940	1945	1950	1955	1960	1965	1970	1973
Corn	2,207	2,577	2,764	2,873	3,907	4,084	4,099	5,643
Wheat	815	1,108	1,109	935	1,355	1,316	1,370	1,711
Soybeans	79	193	299	374	555	846	1,124	1,567
Grain sorghums	86	96	234	243	620	673	696	937
Oats	1,246	1,524	1,369	1,496	1,153	927	909	664
Barley	311	267	304	403	429	392	410	425
Rice	54	68	86	124	121	170	186	189
Rye	40	24	21	29	33	33	39	26

	FARM VALUE OF PRODUCTION (million dollars)						
	1940	1945	1950	1955	1960	1965	1970
Corn	1,519	3,652	4,222	3,849	3,929	4,732	5,441
Wheat	556	1,661	2,042	1,859	2,361	1,775	1,826
Soybeans	70	402	738	831	1,185	2,151	3,205
Grain sorghums	41	115	245	238	515	668	798
Oats	377	1,016	1,081	890	693	585	581
Barley	124	272	358	370	355	395	389
Rice	44	122	197	269	248	376	433
Rye	17	32	28	31	30	33	38

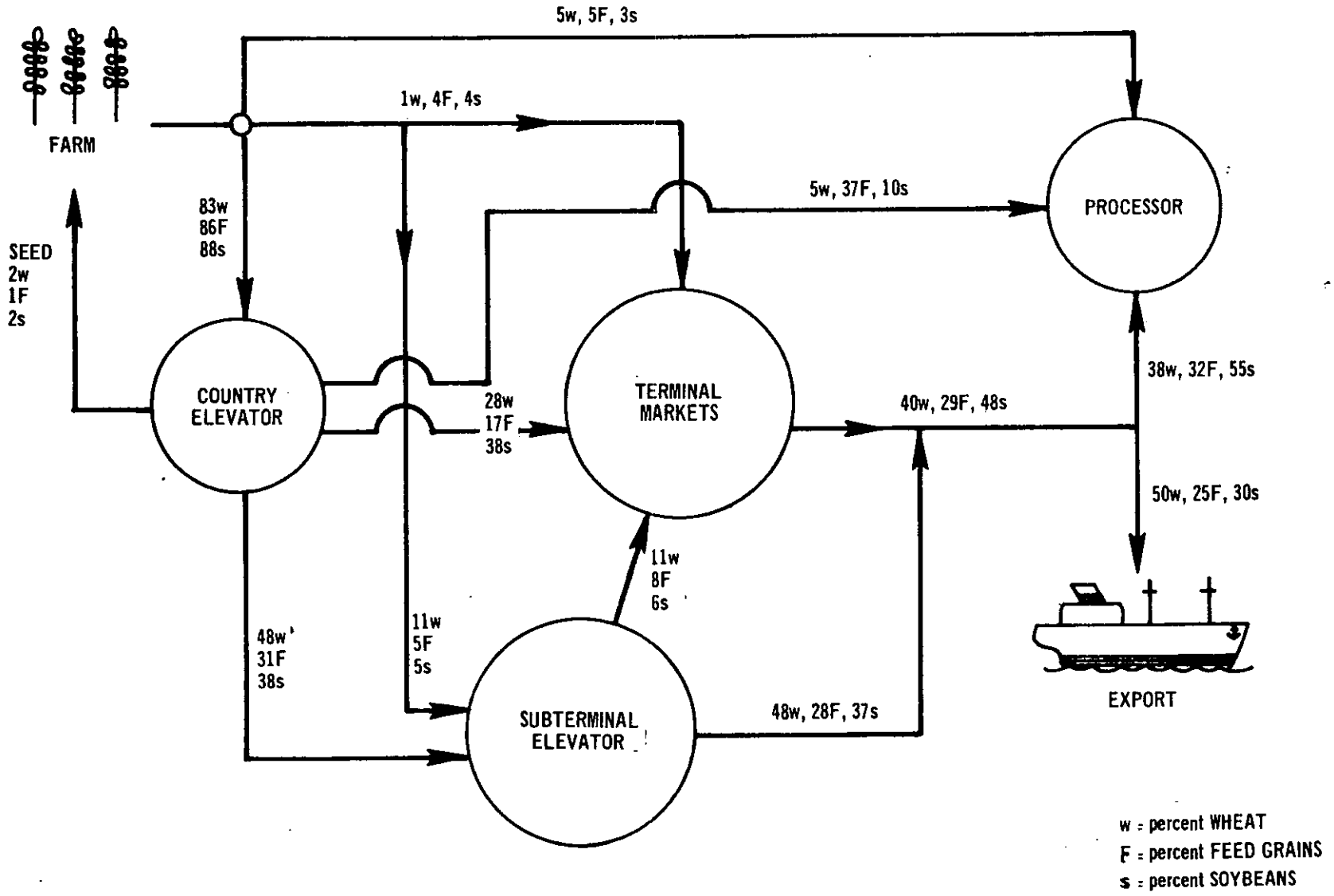

Figure 2-1. Flow of grain from farm to market.

based on 1963-64 data, it is representative of the current movement of grains. Based on these data, about 85 percent of the grain sold by farms is handled by country elevators before shipment to terminal elevators or grain processors. The other 15 percent bypasses country elevators. This is possible largely because improved roads, larger trucks, and more on-farm storage facilities make it economical to ship directly to more distant terminal elevators and processors. Country elevators ship 92 percent of their wheat and 87 percent of their soybeans, but only 56 per cent of the feed grains to terminal elevators. The balance of the feed grain is shipped directly to processors.

Table 2-2 contains data from the Agricultural Stabilization and Conservation Service (ASCS) of the USDA on the number and storage capacities of country and terminal elevators.[3] (ASCS publishes a monthly list of elevators approved for storage of grain under government loans.) These numbers represent most of the elevators and nearly all of the storage capacity in the nation. The data show that the number of both country and terminal elevators has decreased each year since 1969. Information from industry shows that of the 477 terminals registered in 1972, 413 were inland terminals and only 64 were port. In addition to the elevators shown in Table 2-2, about 600 grain processing plants have elevators

ASCS data show that the average storage capacity of a country elevator has grown from 363,000 bushels in 1969 to 441,000 bushels

TABLE 2-2

NUMBER AND CAPACITY OF WAREHOUSES OPERATING UNDER UNIFORM GRAIN STORAGE AGREEMENT[3]

	Country Elevators			Terminal Elevators			Total	
	Number	Total Capacity	Average Capacity	Number	Total Capacity	Average Capacity	Number	Capacity
		(1,000 bushels)			(1,000 bushels)			(1,000 bushels
September 30, 1969	7,879	2,859,716	363	508	1,854,635	3,651	8,387	4,714,351
September 30, 1970	7,607	2,922,575	384	506	1,880,081	3,716	8,113	4,802,656
September 30, 1971	7,380	2,940,125	398	489	1,835,224	3,753	7,869	4,775,349
September 30, 1972	7,147	3,017,523	422	477	1,814,803	3,805	7,624	4,832,326
September 30, 1973	6,962	3,044,448	437	467	1,810,190	3,880	7,429	4,854,638
March 31, 1974	6,847	3,020,963	441	465	1,803,117	3,890	7,312	4,824,080
Average yearly %change 1969-74	-2.76	+1.1	+3.8	-1.76	-0.56	+1.3	-2.7	+0.5

in 1974. Typical storage capacities of country elevators constructed in the last few years range from 200,000 to 750,000 bushels; however, many older country elevators have capacities of only a few thousand bushels. Terminal elevators have an average storage capacity of nearly 3,900,000 bushels although some have capacities in excess of twelve times that. The capacity of these larger terminals includes bins added on the original structures and storage in steel tanks or warehouse-type buildings ("flat storage"). The largest capacity under one roof is 18,000,000 bushels. The storage capacities of processing plants range between 500,000 and 3 million bushels.

The current trend of small elevators going out of business will probably continue. This is not unexpected. Several studies conducted since 1964 reveal an economy-of-scale for larger elevators. The cost of marketing grain decreases significantly if elevators are larger than 1,000,000 bushels storage capacity.[4] More recently, there has been a concurrent decrease in demand to store grain and a greater demand for handling increasingly large quantities of grain rapidly. These are partially the result of:

1) the recent upsurge in foreign demand for grain;
2) a steady increase in domestic demand;
3) a trend toward more on-farm storage;
4) the reduced amount of grain to be stored as a result of 1, 2, and 3;

5) attractive railroad tariffs for multi-car shipments; and

6) increasing use of large hopper cars with capacities up to 80% larger than conventional cars.

These forces have initiated the construction of elevators with low storage capacity and high handling capacity which permits multi-car trains to be quickly loaded. One report indicates over 100 such elevators may be built by 1980.[5] In addition, some existing elevators will also be modified to gain this ability.

True growth in the grain processing industries is expected to be slow since the per capita consumption of grain products is remaining constant or decreasing. Only soybean processors have significant incentive to invest in new storage capacity. Soybean production in the United States has increased over 20 fold, from 70 to 1,567 million bushels, in less than 35 years. Soybeans are an increasingly important source of protein for man and animals. Soybean oil is used in foods, cosmetics, paints, and plastics.

Country elevators receive almost 100 percent of their grain by truck. They ship primarily by truck and rail in near equal quantities. Inland terminals receive grain primarily by truck and rail, and ship primarily by rail and water. Port terminals receive grain by rail, truck, or barge, depending on their location and facilities. They ship almost exclusively by water. A strong trend

is the increasing use of water transportation by all three types of elevators. In 1971-72 country elevators shipped 13 percent of their product by barge, up nearly 100 percent from 1970-71. Receipts by water at port terminals increased from 25 percent in 1970-71 to 40 percent in 1971-72. The modes of transportation used by country, inland, and port terminal elevators are summarized in Table 2-3.[6]

The quantity of grain handled in relation to the storage capacity for the three types of elevators is shown below.

	Ratio of grain handled to storage capacity[6]	
	1970-71	1971-72
Country elevators	1.8	2.0
Inland terminals	1.2	1.4
Port terminals	7.7	7.6

The ratio for port terminals is significantly greater than for other elevators because the primary purpose is not to store grain but to receive it from inland storage facilities and ship it to overseas markets. Data on the actual quantities of grain handled by elevators are not directly available; however, these quantities can be estimated from a number of sources. One method is by extending USDA Economic Research Service (ERS) data which covers elevators approved for storage of grain under government loans, to cover all elevators. This method gives the following estimate:

TABLE 2-3

TRANSPORTATION MODES FOR RECEIPT AND SHIPMENT OF GRAIN[6]

	Percent Received by-			Percent Loadout by-		
	Truck	Rail	Water	Truck	Rail	Water
Country Elevators						
1970-71	99.8	0.2	-	49	45	7
1971-72	99.8	0.2	-	42	44	13
Inland Terminals						
1970-71	40	55	5	15	55	30
1971072				17	48	35
Port Terminals						
1970-71	15	60	25	6		94
1971-72	10	50	40	6		94

QUANTITY OF GRAIN HANDLED

(million bushels)

	1970-71	1971-72
Country elevator	5,318	5,912
Inland terminal	1,574	1,837
Port terminal	2,717	2,689

A second method, for country elevators only, is to use the volume of grain sold by farms[7] and the corresponding percentage which goes to country elevators (see Figure 2-1). By this method, 5,190 million bushels were handled in 1970-71 and 6,288 million in 1971-72. This method is not applicable to inland and port terminal elevators since available data on the distribution of grain, shown in Figure 2-1, are not defined in these terms.

Although elevators are located throughout the United States, the major concentration is in the grain producing states in the Mid-Plains, South Plains, and Great Lakes regions.[2/] Kansas has the largest grain storage capacity of any state with 13.2 percent of the elevators and 15.9 percent of the total domestic capacity. Texas has only 6.5 percent of the elevators, but 14.0 percent of the total

[2/] Mid-Plains: Nebraska, Kansas, Colorado, Wyoming, Iowa, and Missouri; South Plains: Oklahoma, New Mexico, and Texas plus Gulf port facilities; Great Lakes: Wisconsin, Illinois, Indiana, Ohio, Michigan, and Minnesota.

capacity. The five states of Kansas, Texas, Illinois, Nebraska, and Iowa together account for 51.9 percent of the elevators and 57.7 percent of the storage capacity. Country elevators are almost exclusively located in rural areas and small towns. Of 6,477 country elevators, 87 percent are located in areas with less than 100,000 inhabitants.

Terminal elevators are located in the principal grain-marketing centers, most of which are in metropolitan areas. However, there is a recent trend to build terminals in rural areas.

Grain processing facilities for wheat, corn, and rice mills, soybean processing plants, and wet corn mills are located in both rural and urban areas. Although most were originally constructed in rural areas, many have since been surrounded by metropolitan growth.

2.1.2 The Emission Problem

There are four primary functions that take place in an elevator as shown in Figure 2-2: receiving, handling, drying, and shipping. All of these are materials-handling processes rather than processes which affect a chemical change in the product. Particulate matter, which has been designated as a criteria pollutant under section 109 of the Clean Air Act, is the main pollutant, although very small amounts of combustion products can be emitted from grain dryers (these usually operate less than three months per year and burn natural or propane gas). The particulate matter may contain 60-90

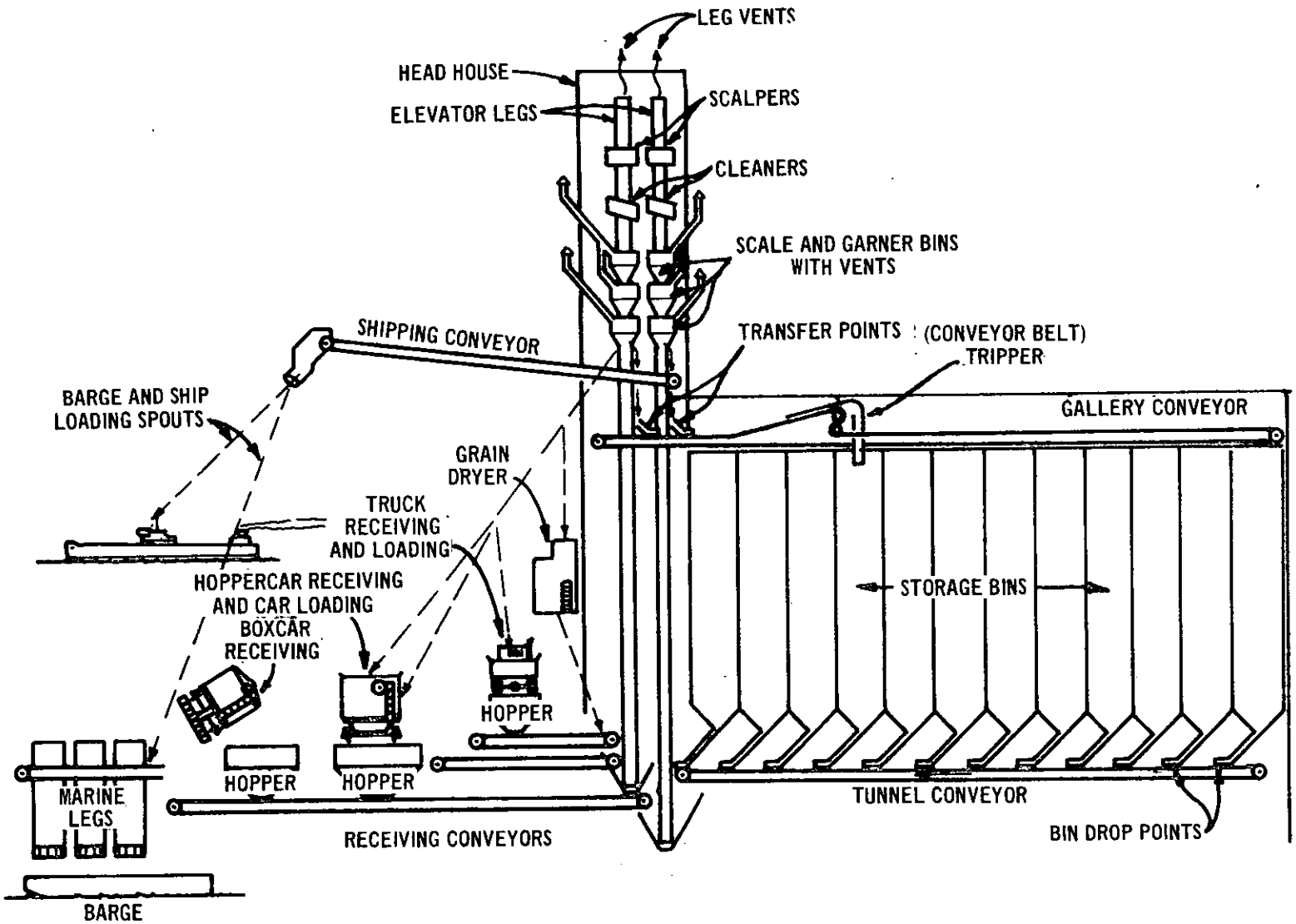

Figure 2-2. Terminal elevator.

percent organic material. Three to 20 percent of the inorganic portion may be free silicon (sand from entrained dirt).[8] Specific materials in the particulate matter include particles of grain kernels, spores of smuts and molds, insect debris, pollen, and dirt from the field.

The particulate matter can be emitted from almost any point in the elevator process. Many of the emissions are fugitive. They become airborne because of ineffectual of nonexistent hooding or pollutant capture systems.

Suspended particulate material has been monitored with a high volume sampler and found to be nearly 240 micrograms per cubic meter in the immediate vicinity of grain handling plants. A size distribution of these particulates revealed 99.5 percent were less than two microns and 50 percent were less than 0.03 micron in diameter. Such small particles will readily invade and affect the small air spaces in the lungs.[9] Ambient concentrations of particulate greater than 100 micrograms per cubic meter are known to have adverse health effects on humans.[10]

Insects, molds, and fungi associated with grain handling may also cause respiratory ailments. The effects of long-term (decade) exposure to low concentrations of particulate matter from grain are not known.

Highly mechanized modern grain elevators without adequate particulate matter control equipment can subject workers inside the elevator to 100 to 400 milligrams of airborne dust per cubic meter, well above the threshold that causes respiratory problems. The high incidence of respiratory disease among millers, bakers, and grain elevator and dock workers is well known.

2.2 PROCESSES AND EMISSIONS

2.2.1 General

The processes at an elevator include receiving (by truck, railcar and barge), handling and conveying, drying, and loading (into trucks, railcars, and aquatic vessels).

Several factors common to each of the processes that can affect emissions are discussed below. The first is the characteristics of the particulate matter which varies with the type of grain handled. A test conducted to determine the magnitude of emissions from several elevator processes also indicated that emissions from soybeans are higher than for corn, wheat, and milo.[11] Soybeans contain more dirt since they grow close to the ground and the harvester may scrape up earth as it cuts the plant off. Corn has "beeswings," large flaky particles that readily become airborne because of their large surface area and low density. They can be a significant nuisance to nearby residents during the harvest season. The moisture content of the grain is another factor. It can vary from 16 to over 20 percent at

harvest; however, not enough data on moisture content are available to quantify its effect on emissions. After the grain is dried, the moisture content will not vary significantly.

The percentage of "foreign material" or "dockage" in grain (the ratio of the weight of material other than whole grain kernels to the total weight) can also affect emissions. Most of the foreign material may be weed seeds, broken kernels, dirt, stones, and other heavy particles that do not cause an emission problem. However, since chaff, straw, and other light materials are also present with the heavy particles, a high percentage of foreign matter is a rough indication of high emissions potential. The percent foreign matter is often determined for each load of grain received or shipped.

Country elevators, operate primarily during the harvest season which begins in June for wheat and ends with corn and soybeans in November. Consequently, their emissions are also "seasonal." In contrast, terminal elevators may receive and ship grain year round.

In most states, elevators are subject to general process weight regulations for particulate emissions. Pennsylvania has regulations specific to elevators.[12] The application of these regulations is discussed in Chapter 4. In general, typical state regulations can usually be met with high efficiency cyclones.

Grain dryers are addressed specifically by the state of Maryland. Their regulations require control of grain dryer emissions with a

50-mesh screen or its equivalent. The Illinois EPA proposed regulations to the Illinois Pollution Control Board that would require 50-mesh vacuum-cleaned screens for exhaust gases from rack dryers and external sheeting with perforations not exceeding .094 inch in diameter for column dryers.

2.2.2 Truck Receiving

Grain is emptied from most trucks (see Figure 2-3) by lifting the front end with an overhead winch or hydraulic platform to allow grain to flow from the tailgate. The grain falls from the truck through a heavy grate and into the receiving hopper. Dust-laden air can be emitted as air in the hopper is displaced by grain. A conveyor beneath the hopper moves the grain to storage bins.

The size of the receiving hopper limits the speed at which the grain can be handled. Small hoppers used at country elevators and elevators at grain processors where grain is received at a relatively slow pace minimize air pollution. By rapidly filling with grain, they "automatically" decrease the free-fall distance from the truck bed. When this "choke feed" principle occurs, it may take five to ten minutes to empty a truck. At subterminal and terminal elevators where large receiving hoppers and hydraulic hoists are used, a larger 1000 bushel truck is often emptied in two minutes.

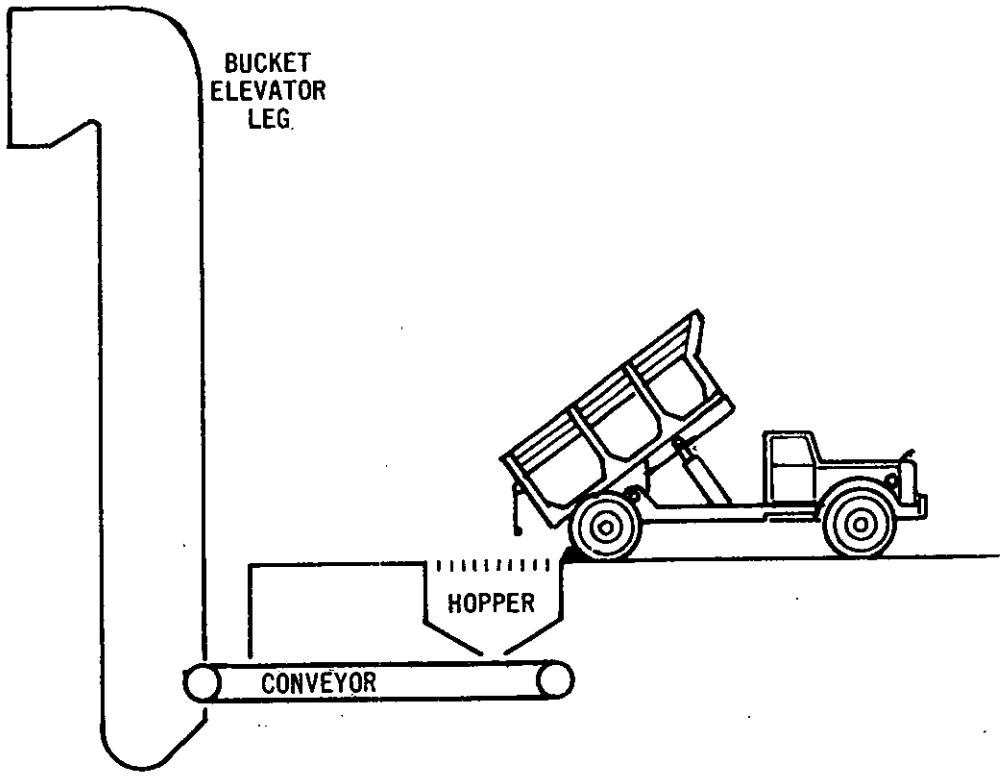

Figure 2-3. Truck receiving.

Some trucks have trailers with three or four "hoppers" from which grain is emptied through a small opening in the bottom of each hopper. Comparatively little particulate matter evolves when hopper trucks are unloaded since the grain flows slowly.

In climates where it is desirable to protect the receiving hopper, often a roof and two sides are built so that trucks can drive through rapidly.

Uncontrolled particulate emissions from truck dumping are estimated to average 0.6 pound per ton (lb/ton) of grain.[13] The amount of particulate matter generated is dependent upon:

1. the type of truck (i.e., hopper or dump);
2. the size of the receiving hopper (i.e., deep or shallow);
3. the speed at which grain is dumped;
4. the type of grain;
5. its moisture content; and
6. the amount of foreign material.

The last three factors were discussed on pages 15 and 16. The others are discussed above. Tests of truck receiving operations using cyclones resulted in measured particulate emissions of 0.05 gr/scf.[14]

2.2.3 Railcar Receiving

2.2.3.1 Hopper Cars - Hopper cars are typically divided into compartments or hoppers. Each has an opening about two feet square in the bottom through which the grain is discharged into a receiving hopper. The receiving hopper is often small so that only one compartment at a time can be emptied. This is common at country elevators and elevators at grain processors where grain is received at a relatively slow pace. As at truck stations, small receiving hoppers rapidly fill with grain thereby decreasing the free-fall distance from the hopper car and minimizing air emissions (see Figure 2-4). At larger facilities the receiving hopper may permit all three hoppers on the railcar to empty simultaneously. When it is desirable to protect the receiving hopper from the weather, it is often covered by a shed with large openings at both ends.

Uncontrolled particulate emissions from unloading railcars are estimated to average 1.3 pounds per ton of grain.[13] This estimate is based on both hopper cars and boxcars. Particulate emissions from hopper cars are below the average. Particulate emissions from railcars are a function of:

1. the size of the receiving hopper (i.e., deep or shallow);
2. the amount of protection from winds;

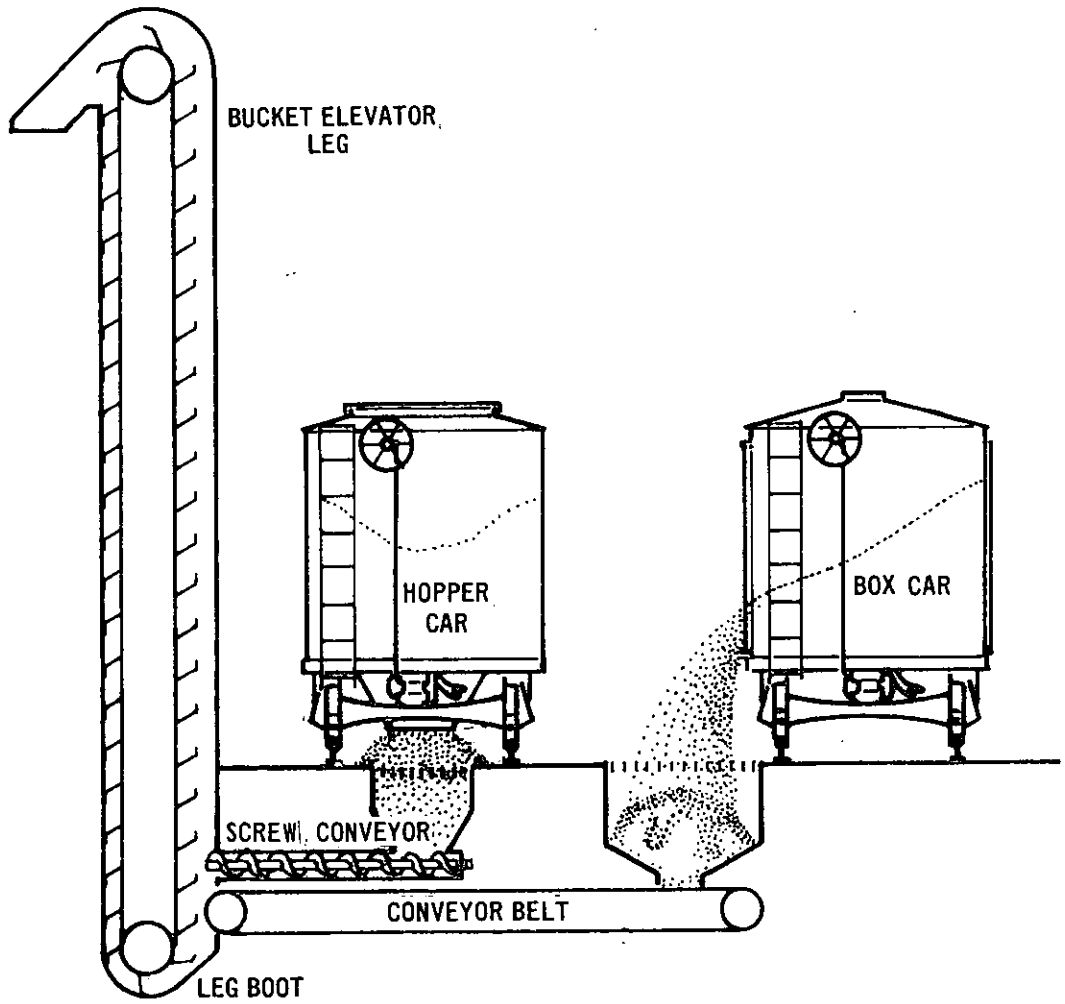

Figure 2-4. Rail car receiving

3. the type of grain;

4. its moisture content; and

5. the amount of entrained foreign material.

2.2.3.2 Boxcars - Conventional boxcars are often used to haul grain. Before it is loaded, a boxcar must be fitted with a "grain door" which is installed over the lower part of the sliding door openings in the side of the car. The grain door is made of wood or heavy cardboard and covers about three-fourths the height of the car door opening.

One method of unloading boxcars is to break the grain door. This results in a surge of particulate matter as the grain falls into the receiving hopper beside the tracks (see Figure 2-4). After this initial surge, the remaining grain is scooped out of the car using power shovels, a front end loader, or some similar means. A cloud of particulate matter may form as each scoop of grain strikes the receiving hopper. The other common unloading technique, used mainly by terminal elevators, is a mechanical car dump. The car is clamped to a movable section of track which rotates and tilts the car to dump the grain out of the door into the receiving hopper. This technique is rapid and results in violent agitation of the air around the flowing grain. These air currents can entrain particulate matter and sweep it from the receiving area. As described for hopper cars, a tunnel-like shed over the receiving hopper is sometimes used.

Uncontrolled particulate emissions from unloading railcars are estimated to average 1.3 pounds per ton (lb/T) of grain.[13] Particulate emissions from boxcars are above this average. The amount of particulate matter generated is dependent upon:

1. the method of unloading the car;
2. the amount of protection from wind;
3. the type of grain;
4. its moisture content; and
5. the amount of entrained foreign material.

2.2.4 Barge Receiving

Grain is received by barge at inland terminal and port terminal elevators. The unloading areas are generally open to the weather. In most cases grain is unloaded with a bucket elevator (leg) that is lowered into the barge. Their capacities range from 15,000 up to 75,000 bushels per hour; the average is about 30,000.

Particulate matter can be generated in the barge by the buckets of the leg and at the transfer point at the top of the leg where the grain is dumped into a receiving hopper. To completely clean the barge, it may be necessary to push or pull the grain to the leg with power shovels or front end loaders. This too can generate fugitive particulate emissions.

Uncontrolled particulate emissions from barge unloading are estimated to average 1.7 pounds per ton of grain.[15] The particulate emissions from a specific facility are dependent upon:

1. the type of grain;
2. its moisture content; and
3. the amount of entrained foreign material.

2.2.5 Grain Handling and Conveying Equipment

Handling and conveying equipment includes bucket elevators (legs) used to elevate the grain; conveyors (screw, drag, and belt type) which move it horizontally; scale and surge bins used to weigh it; scalpers and cleaners; distributors (turn heads and trippers) which direct it to one of several places in the elevator; and the headhouse and other such structures.

A screw conveyor is a large (about 8" diameter) screw contained within a trough. The grain which enters one end of the trough is pushed forward as the screw turns. A drag conveyor consists of a continuous chain with paddles inside a rectangular enclosure. The grain is pushed forward by the paddles. The grain kernels scrape against the sides of the enclosures of screw and drag conveyors causing particles to break off. These conveyors move the grain slower (about 50 feet per minute) than belt conveyors. A belt conveyor is a continuous belt (about 36" wide) that carries the grain forward at about 300 feet per minute. Friction between the grain and the belt usually occurs only when it drops onto the moving belt. Generally, few kernels are broken when using belt conveyors.

After the grain has been dumped into the receiving hopper, it is conveyed to a leg which lifts it to the top of the "headhouse" where it is discharged to a distribution system (see Figure 2-2). The grain is usually distributed directly from the headhouse into storage bins or silos. When the large silos are filled, particulate matter may be emitted from the silo vents, though these emissions are rarely visible. These silos are so large they act as their own settling chamber. Grain stored in one silo for an extended time may increase in temperature because it is either:

a. too moist and begins to spoil, or

b. diseased or infested and the disease is growing.

The grain must either be treated to eliminate the cause of the increasing temperature or it may be "turned" to allow it to cool by aeration. To "turn" the grain, it is dropped from the bottom of the silo, conveyed to a leg, lifted to the distributor and dropped to another empty bin.

To ship grain, it is dropped from the bottom of the silo, conveyed to a leg, and elevated to the distributor. From there it falls to grain cleaners or the load-out scales. Grain cleaners are used in many elevators but especially at terminals where the grain shipped must meet USDA standards. The portion of grain received, that is cleaned, by each type of elevator is shown below.

GRAIN CLEANED[16]

	PERCENT OF RECEIPTS	QUANTITY (million bushels/year)
Country	7.8	415
Inland Terminal	22.1	348
Port Terminal	14.6	397

Equipment used to clean grain varies from simply screening it to a simultaneous screening and winnowing operation. The simple screening devices remove large sticks, rocks, tools, and other trash. Particulate matter which becomes airborne as the grain rolls over the screens will generally settle inside the elevator and not escape to the atmosphere. However, a small amount of suction is often applied to reduce the particulate matter concentration inside the elevator. This suction system usually discharges through an air pollution control device to the atmosphere. The more complex ventilated cleaners pull or blow air through the screens to lift chaff and other light impurities from the grain (see Figure 2-5). The light material is collected in a cyclone or fabric filter.

Uncontrolled particulate emissions from screens are estimated to be 3.2 lbs per ton of grain. Uncontrolled particulate emissions from the combination cleaning systems are estimated to be 6.0 lbs per ton of grain.

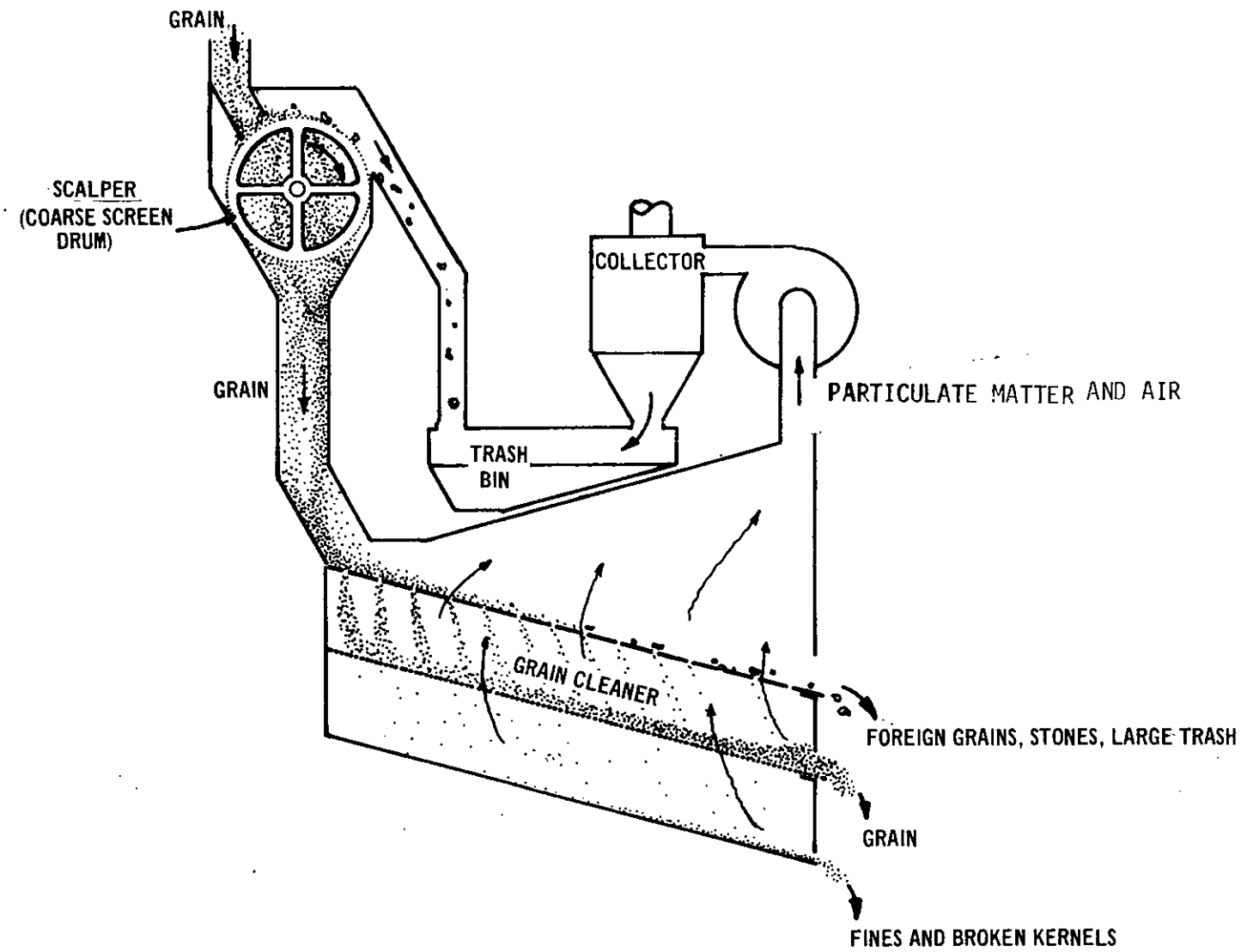

Figure 2-5. | Grain cleaning

Both country and terminal elevators have scales which are preceded and followed by surge bins. Conveyors discharge a continuous stream of grain into the upper surge bin while the scale weighs batch quantities and discharges them into the lower surge bin, which also empties continuously. Generally, the grain drops directly into the shipping vehicle; however, sometimes it may be necessary to convey the grain to the shipping station. The air displaced by the entering grain must be vented from the scale hopper and both surge bins. The surge bins and scale hopper can be vented to each other to prevent particulate emissions.

Particulate emissions can occur at transfer points as grain is fed onto or discharged from a conveyor. Examples of transfer points are the discharge from one conveyor onto another, the discharge from a leg onto a conveyor, or the discharge from a storage silo onto a tunnel belt conveyor. If these transfer points are not hooded, fugitive particulate matter may be emitted directly to the interior of the elevator or directly into the atmosphere.

Particulate emissions from handling equipment can be prevented in many areas through the use of totally enclosed equipment. Another method which minimizes particulate emissions is to handle grains at slower rates. This reduces agitation of the air around the flowing grain and less particulate matter becomes airborne.

Uncontrolled particulate emissions from handling operations are estimated to be 6.0 pounds per ton (lb/T) of grain. Again, the amount of particulate matter generated is dependent upon the same parameters which have been previously discussed. These are:

1. the type of equipment used;
2. the speed of operation;
3. the type of grain;
4. its moisture content;
5. the amount of entrained foreign material; and
6. the volume of ventilated air.

2.2.6 Grain Drying

Grain with more than 14 percent moisture must be dried to prevent its spoiling. Therefore, it must be dried within a few days after receipt. Corn, soybeans, and milo are the three major grains that require drying. A typical country elevator might be equipped with a 1000 bushel per hour (bu/hr) dryer while a typical terminal elevator may have one or several 2000 bu/hr dryers. There are two basic types of grain dryers, rack and column (see Figure 2-6). Grain enters the top of both types and flows downward in a continuous stream and out the bottom. Air blown through the grain streams evaporates the excess moisture. Grain with 16-22 percent moisture can be reduced to 13 or 14 percent in one or two passes through the dryers.

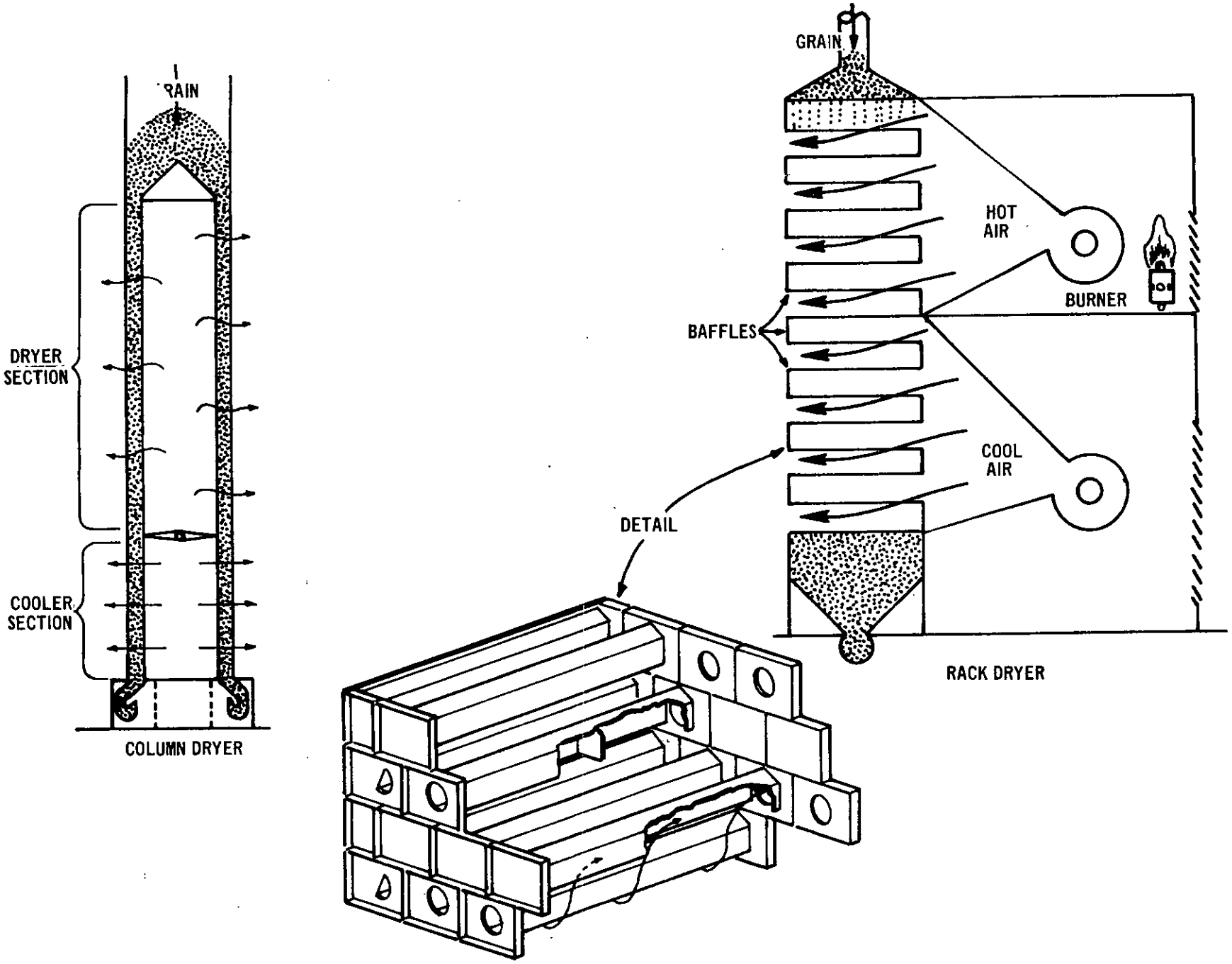

Figure 2-6. Grain dryers.

Particulate matter and chaff can become entrained in the air and carried from the dryer. The potential quantity of particulate emissions is largely dependent on the type and model of dryer. In a column dryer the grain flows in a continuous column between two perforated metal sheets to the bottom. Most of the particulate matter is trapped within the column of grain and never reaches the side of the dryer. A rack dryer contains baffles or racks around which the grain and hot air must flow. This creates a cascading motion of the grain and can cause increased particulate emissions. The dryer is also more open, since the air does not pass through metal sheets.

Uncontrolled particulate emissions are estimated to be as much as 0.5 pound per ton (lb/T) of grain from column dryers and 4.0 pounds per ton (lb/T) of grain from rack dryers.[17] The amount of particulate matter generated is dependent upon:

1. the type of dryer;
2. the model of dryer;
3. the type of grain dried; and
4. the amount of entrained foreign material.

2.2.7 Truck Loading

Grain is usually shipped by truck from country elevators. The grain to be loaded out is weighed in the scale hopper and then dropped into the lower surge bin. It flows directly from the surge bin down a chute into the truck (see Figure 2-7). Often the loading area is not enclosed and wind that blows across the end

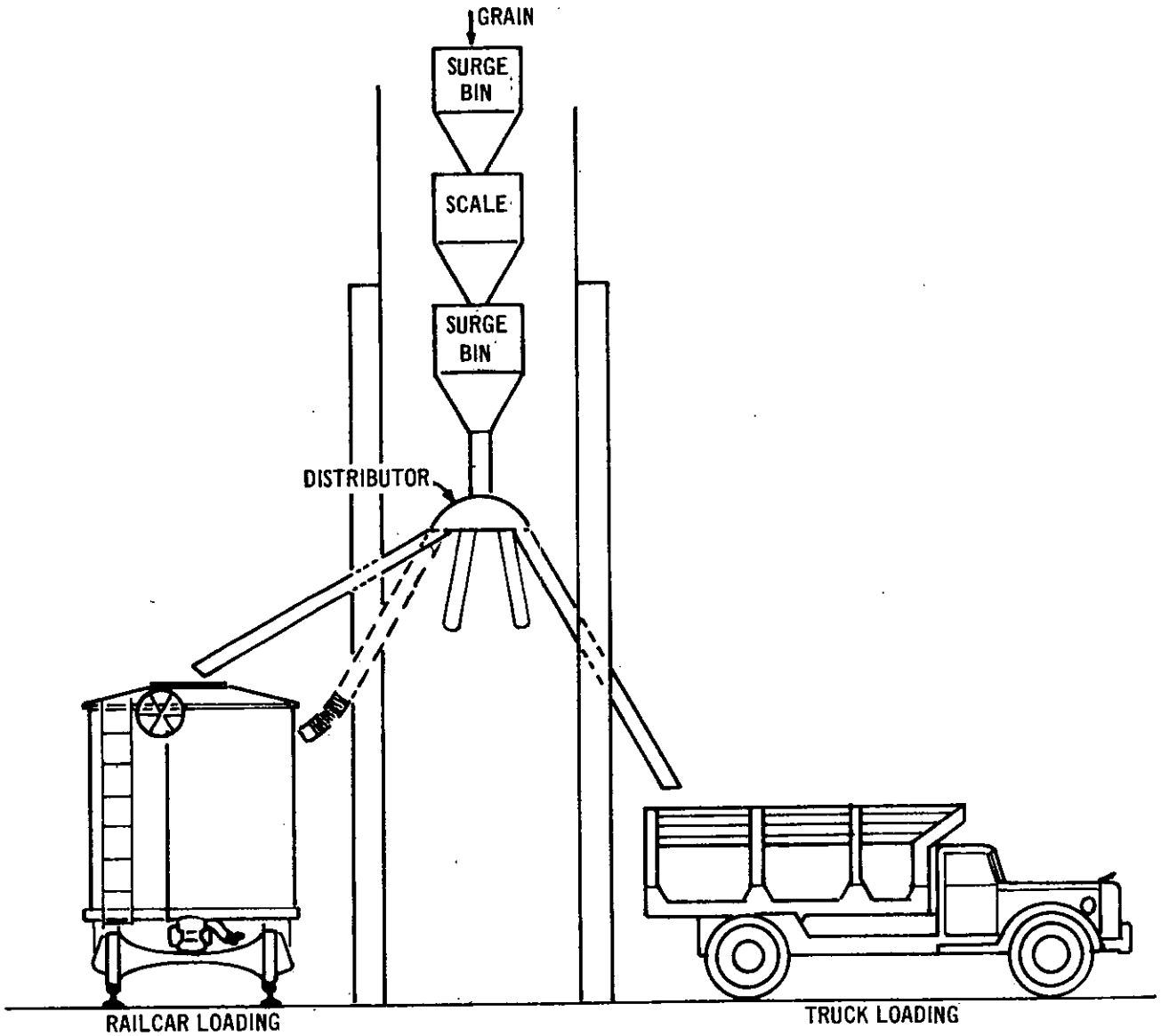

Figure 2-7. Truck and railcar loading.

of the loading spout entrains particulate matter from the grain stream. Some type of enclosure could greatly reduce the atmospheric particulate emissions. Particulate emissions can also be reduced by decreasing the free-fall distance between the end of the loading spout and the truck bed. This can be done with a canvas sock or a telescoping loading spout.

Uncontrolled particulate emissions from truck loading have not been estimated. The amount of particulate matter generated by truck loading is dependent upon:

1. the amount of protection from the wind;
2. the free-fall distance between the end of the spout and the truck bed;
3. the type of grain;
4. its moisture content; and
5. the amount of entrained foreign material.

2.2.8 Railcar Loading

2.2.8.1 Hopper Cars - Grain is shipped by hopper cars from country and inland terminal elevators. They are loaded through either a long rectangular hatch down the center of the car or two rows of round hatch openings. The grain to be loaded out is weighed in the scale hopper and then drops into the lower surge bin. It flows from the surge bin directly down a loading chute into the railcar (see Figure 2-7). Particulate matter can be entrained in the air displaced from the car.

Reducing the free-fall distance between the end of the spout and the top of the hopper car with canvas socks or telescoping loading

spouts lowers particulate emissions because it decreases the winnowing effect of wind blowing across the end of the loading spout. The amount of particulate matter escaping the car can be reduced by keeping hatch openings closed if possible. Some type of enclosure around the loading area could also diminish particulate emissions.

Uncontrolled particulate emissions from hopper car loading have been estimated at 0.27 pound per ton (lb/T) of grain.[13] The amount of particulate matter generated is dependent upon:

1. the amount of protection from the wind;
2. the free-fall distance between the end of the loading spout and the top of the hopper car;
3. the open area (hatches) through which air can be displaced from the car;
4. the type of grain;
5. its moisture content; and
6. the amount of entrained foreign material.

2.2.8.2 Boxcars - Before a boxcar can be filled with grain, grain doors must be installed over the doorway in the side of the car. The grain door, constructed of wood or heavy cardboard, covers about three-fourths of the height of the door opening. The grain is directed from the scales down a loading spout and through the opening above the grain door (see Figure 2-7). Particulate matter can be entrained in the air displaced from the car. Some type of enclosure around the loading area could also diminish particulate emissions.

Uncontrolled particulate emissions from boxcar loading have been estimated to be 0.27 pound per ton (lb/T) of grain.[13] The amount of particulate matter generated is dependent upon:

1. the amount of protection from the wind;
2. the type of grain;
3. its moisture content; and
4. the amount of entrained foreign material.

2.2.9 Barge Loading

There are two mechanisms which result in particulate emissions during the loading of barges. The first is when the grain drops from the loading spout into the barge (see Figure 2-8). Often, a free-fall distance of several feet between the end of the spout and the top of the barge allows wind to entrain particulate matter from the grain stream. This free-fall distance can be reduced and particulate emissions minimized by using canvas socks or telescoping loading spouts. The second is re-entrainment as the particulate matter boils up from the hold. Barges can carry approximately 50,000 bushels of grain. The hold, is often covered with four large steel hatches. To fill a hold the entire top must be uncovered by a crane. The newest designs, however, use a large fiberglass cover with several small hatches that one man can swing open. The smaller hatch openings minimize the surface area of the grain that is exposed to the wind. This is a very important improvement since there appear to be no barge loading areas that are enclosed and entrainment by the wind is the major mechanism by which particulate emissions occur.

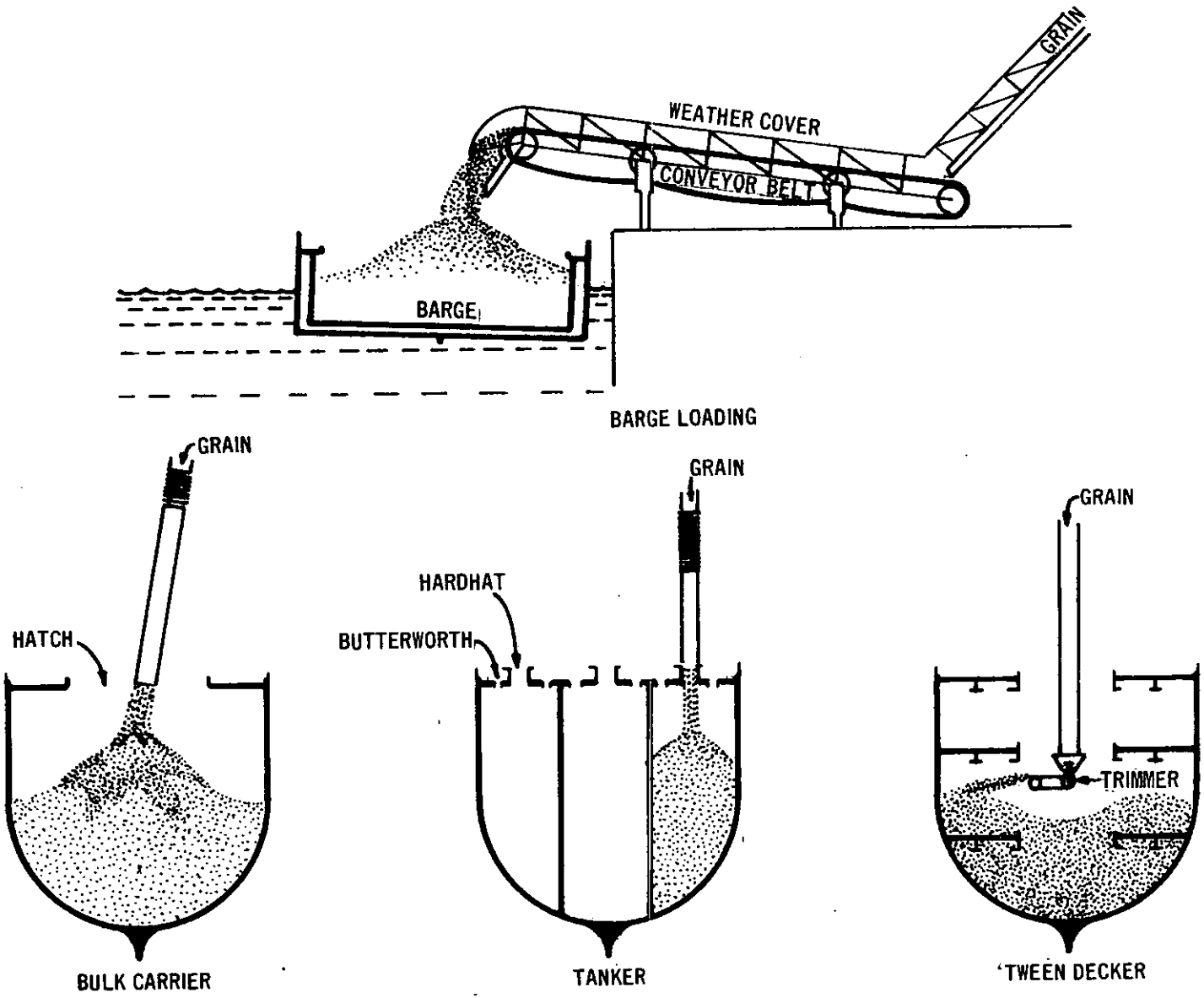

Figure 2-8. Barge and ship loading.

Uncontrolled particulate emissions from barge loading have been estimated to be 1.2 pounds per ton (lb/T) of grain.[18] The amount of particulate matter generated is dependent upon:

1. the open area of the top of the barge;
2. the free-fall distance between the end of the loading spout and the top of the barge;
3. the type of grain;
4. its moisture content; and
5. the amount of entrained foreign material.

2.2.10 Ship Loading

Grain loaded into ships is conveyed from the scales to the loading dock where it drops down long spouts into the ship's hold at rates of about 40,000 bushels per hour.

Fifty to 80-foot loading spouts are not unusual. Particulate emissions increase with the length of the spout because more particulate matter is created by abrasion of the kernels as they bounce down the long loading spout. The velocity of the falling grain also increases, which causes an increase in the amount of air entrained in the grain stream. Strong winds, typical of sea coast areas, also increase particulate emissions by entraining particulate matter from the free falling grain stream below the loading spout. Increased loading rates cause more rapid displacement of particulate-laden air from the hold and also increase particulate emissions.

Uncontrolled particulate emissions from ship loading have been estimated to average 1.2 pounds per ton (lb/T) of grain.[18] The amount of particulate matter generated is dependent upon:

1. the length of the loading spout;
2. the loading rate;
3. the type of ship;
4. the type of grain;
5. its moisture content; and
6. the amount of foreign material in the grain.

Three types of ships are used to haul grain. Each presents a different source of particulate emissions (see Figure 2-8).

2.2.10.1 Bulk Carrier - The bulk carrier's hold is compartmented by a series of vertical bulkheads. There are no internal structures to hamper the loading operation. Hatch openings are large and permit easy access to all parts of the hold. The loading operation for this ship can be separated into two stages: 1) general filling to within four feet of the top of the hold; and 2) "topping off" or filling the top four feet of the hold. Particulate emissions are greatest during "topping off" because the wind can readily carry the particulate matter away. The hold cannot be covered at this time because it is necessary to move the spout around rapidly to spread the grain. Therefore, it is necessary to minimize the distance between the spout and the grain surface in order to reduce particulate emissions.

2.2.10.2 'Tweendecker' - The hold of the 'tweendecker' is similar to a bulk carrier except that instead of an unencumbered open space, the 'tweendecker' has two horizontal intermediate decks (see Figure 2-8). The grain must be carefully stored under the intermediate decks to assure the hold is completely filled. Otherwise the grain could shift, which could cause the ship to list or capsize. To position the grain under the intermediate deck, a "trimmer" or high-speed conveyor belt is used to throw the grain from the loading spout. This trimmer generates a large amount of particulate matter so that loading a 'tweendecker' results in more particulate emissions than a bulk carrier.

2.2.10.3 Tanker - A tanker is designed for transporting liquid in bulk, but is often used for grain. Access to the holds is gained through two types of hatches. The primary hatch, the "hardhat," is three feet in diameter and is used for loading most of the grain. The "butter-worth" is one foot in diameter. It is used for filling the small spaces which remain after filling through the hardhats. Less particulate matter escapes during filling of tankers than other ships since they are more enclosed.

REFERENCES

1. "Agricultural Statistics, 1973, "U. S. Department of Agriculture, Washington, D.C., 1973, pp. 1, 16, 20, 28, 35, 41, and 50.

2. "Emissions Control in the Grain and Feed Industry, Volume I - Engineering and Cost Study," by Midwest Research Institute for the U. S. Environmental Protection Agency, EPA 450/3-73-003a, December 1973, pp. 9-11.

3. Ibid., p. 17, and supplemental data from the U. S. Department of Agriculture.

4. "Economic Impact of Anticipated Pollution Abatement Costs for Grain Storage: Grain Elevators and Storage Facilities of Soybean Processing, Wheat Milling, Wet Corn Milling, and Dry Corn Milling Plants," prepared by Arthur D. Little, Inc., for the U. S. Environmental Protection Agency, Contract No. 68-02-1349, Task No. 3, August 1974, p. 30.

5. Ibid., p. 130.

6. Reference 2, p. 20.

7. Reference 2, p. 6.

8. Reference 2, p. 525.

9. Reference 2, p. 526.

10. Reference 2, p. 523.

11. "Potential Dust Emissions from a Grain Elevator in Kansas City, Missouri," prepared by Midwest Research Institute for the U.S. Environmental Protection Agency, Contract No. 68-02-0228, Task No. 24, May 1974, p. xiv.

12. "Analysis of Final State Implementation Plans - Rules and Regulations," U.S. Environmental Protection Agency, APTD 1334, July 1972, p. 29-31.

13. Reference 11, p. xiii.

14. Reference 2, pp. 122, 123, 125, 127, and 128.

15. Pfaff, Roger O., "Emission Testing Report" for Plant E, EMB Test No. 74-GRN-7, January 1974.

16. Reference 2, p. 23.

17. "Emission Control in the Grain and Feed Industry, Volume II - Emission Inventory," by Midwest Research Institute for the U.S. Environmental Protection Agency, EPA 450/3-73-003b, September 1974, p. 17.

18. Reference 2, p. 118.

3. SUMMARY OF THE PROCEDURE FOR THE DEVELOPMENT OF THE PROPOSED STANDARDS

3.1 LITERATURE REVIEW AND INDUSTRIAL CONTACTS

The program for development of standards of performance for grain elevators relied largely on results of a previous investigation of air pollution emissions and control techniques in the grain and feed industry sponsored by EPA.[1] This earlier study contains the responses of 509 elevators throughout the country to a questionnaire on the air pollution aspects of their business. During the study, discussions were held with numerous individual grain marketing companies, manufacturers of process and control equipment, and a trade association (National Grain and Feed Association). State air pollution control agencies were contacted for their recommendations on the "best controlled" grain processes in their areas. Based upon the information from these sources, a number of elevators were selected for on-site visits. Later, certain of these were more closely evaluated by actually measuring the emissions from their control devices.

3.2 PLANT INSPECTIONS

EPA engineers selected and visited forty-five reportedly well-controlled elevators to evaluate the particulate control systems and obtain information on the major equipment or operational parameters that affect emissions. The major details noted during the inspections were:

1. design and effectiveness of hoods,
2. type and effectiveness of control devices,
3. visible emissions at the point of particulate matter generation and pickup,
4. visible emissions from the control device,
5. maintenance schedule for fabric filters,

6. adequate emission test locations,

7. process operation and cycle,

8. process variables that are regularly measured, and

9. types of grains handled and periods of operation.

From these visits, 20 plants were selected for actual measurement of particulate emissions.

3.3 SAMPLING AND ANALYTICAL TECHNIQUES

3.3.1 Elevators

EPA Reference Method 5 was used to gather the data used to support the proposed particulate standards for emissions from control devices at grain elevators. The provisions of this method were originally published in the Federal Register on December 23, 1971 (36 FR 24877). Minor revisions of the method have been published since then. The method provides detailed sampling methodology and equipment specifications. The method also provides specific procedures for the measurement of moisture content and volume of gas sampled, and permits continuous assurance of isokinetic sampling.

Method 5 was not used exactly as prescribed in the Federal Register. The electrical heating systems for the probe and filter holder were not used because the gas streams sampled were of low temperature and moisture content and grain dust (particulate matter) presents a possible explosion hazard. Under these stack conditions, the operation of Method 5 without probe or filter heaters does not affect the accuracy of the results. The effect of operating the sampling train

without heaters is that the in-stack and out-of-stack filtration methods can be considered equivalent.

Sampling and analytical techniques for particulate matter are discussed in more detail in Chapter 8, section 8.7.

3.3.2 Dryers

Grain dryers typically exhaust directly from the outlet of the control device to the atmosphere without the use of an exhaust stack. The cross sectional area of the outlets is generally quite large. The resulting low velocities and unconfined flow are not amenable to sampling with conventional techniques. Therefore, during the development of the standard of performance, attempts were made to develop methodology which would allow representative sampling. Since hooding could cause exhaust pressure buildup and upset the drying process the procedures which were employed focused upon techniques for measuring low velocities, and for obtaining representative samples unaffected by crosswinds. Both a hot wire anemometer, and special pitot tube technique were used in attempts to accurately measure velocity. A three-foot section of 12-inch diameter duct was placed perpendicular to the exhaust outlet to serve as a mini-stack. Sampling was conducted at the center of the duct section while the duct section was traversed across the control device outlet.

Based upon the experience gained during two tests employing these techniques, it was concluded that sampling results of acceptable accuracy could not be obtained. Both the problem of crosswinds, and the strong vertical component present in the exhaust gas flow which varies from source to source were identified as primary factors preventing obtainment of representative samples.

3.4 EMISSIONS MEASUREMENT PROGRAM

3.4.1 Elevators

EPA used Method 5 to perform particulate emission tests on 11 installations at grain elevators controlled by fabric filters. The systems chosen for tests controlled well-defined operations where the process weight could be determined. The systems collected particulate matter generated during truck unloading, boxcar unloading, barge unloading, conveying and transfer, grain cleaning, railcar loading, and ship loading.

Each test consisted of three, two-hour test runs, except as noted in Chapter 5 for facility I. Grain handling operations are intermittent, therefore, the sample train was stopped and restarted several times during each test to coincide with the process operation. Process parameters monitored during each test were:

1. the type of grain handling systems (deep or shallow hopper, telescoping spout, etc.),
2. the type of grain processed,
3. the weight or volume of grain processed,
4. the percent moisture in the grain,
5. the percent foreign material (chaff, other grains, broken kernels, stones, etc.) in the grain, and
6. the conveyor belt speed (where appropriate).

Particle size was measured at five of the facilities using a Brinks impactor. In all but one case, attempts to measure the particle size of uncontrolled particulate emissions entering the fabric filters (inlet tests) were unsuccessful. Large particles plugged the sample

nozzle preventing further sampling. In tests of outlet particulate emissions from the fabric filters, not enough particulate could be collected on the impaction plates to weigh accurately.

Visible emissions were observed for a minimum of 1 hour at nine elevators from both the fabric filters and sources of fugitive particulate emissions.

3.4.2 Dryers

EPA attempted to develop a standard test procedure for grain dryers and obtain representative particulate emission samples from two dryers. It was concluded that much more work would be required to develop a reliable test procedure.

Visible emissions were observed for at least one hour at four column dryers and for one-half hour at one column dryer. Two rack dryers were also observed for visible emissions.

REFERENCES

1. "Emission Control in the Grain and Feed Industry, Volume II - Emission Inventory," by Medwest Research Institute for the United States Environmental Protection Agency, EPA-450/3-73-003b, September 1974, p. 3.

4. EMISSION CONTROL TECHNOLOGY

A discussion of emission control technology in this industry must separately consider the equipment used to capture particulate emissions and that which actually removes pollutants from a gas stream. Grain elevators use a large variety of equipment to capture particulate emissions from the many processes; however, they all use similar equipment or control devices to remove the captured particulate from the effluent gas stream. Data from a questionnaire survey on the types of emission control devices currently in use at 324 country elevators, 196 inland terminal elevators, and 12 port terminal elevators are shown on Table 4-1.[1]

Almost every elevator that does control emissions uses either a cyclone or fabric filter. Cyclones are classified as either high-efficiency or low efficiency. High-efficiency cyclones are characterized by a narrow inlet opening, long body length relative to body diameter, and a small outlet diameter. The higher gas velocity in the cyclone results in a collection efficiency of about 85 to 95 percent. The pressure drop across a high efficiency cyclone may be 3 to 5 inches of water. This is the most common control device used at elevators. Low-efficiency cyclones have large inlet openings, large diameter bodies and large outlet diameters. The slower gas velocity results in collection efficiencies between 60 and 85 percent and pressure drops of only 0.5 to 2.0 inches of water.

Table 4-1 shows that fabric filters are not now used at country elevators, but are used at terminal elevators and processing plants. Their

TABLE 4-1

EMISSION CONTROL DEVICES AT EXISTING ELEVATORS

Facility and Process	Percent Controlled by			Percent with No Control
	Fabric Filter	Cyclone	Other Device	
Country				
Receiving	0	30	1	69
Shipping	0	21	1	78
Cleaning	0	60	13	27
Transfer	0	27	0	73
Legs	0	58	1	41
Scale and surge bins	0	26	1	73
Inland Terminal				
Receiving	19	40	0	41
Shipping	17	12	1	70
Cleaning	10	33	0	57
Transfer	27	64	-	9
Legs	24	53	-	23
Scales and surge bins	8	17	-	75
Tripper	8	14	-	78
Port Terminal				
Receiving	46	30	0	24
Shipping	0	26	0	74
Cleaning	15	22	0	63
Transfer	27	55	-	18
Legs	41	22	-	37
Scales and surge bins	41	22	-	37
Tripper	1	56	-	43
Process Storage				
Receiving	42	16	2	40
Cleaning[a]	44	55	1	--
Transfer	58	26	-	16
Legs	50	30	-	20
Scales and surge bins	45	23	-	32
Tripper	50	24	-	26

[a]Percent of controlled plants, only. Data were not sufficient to determine the percentage of plants without controls.

most common use is the control of particulate emissions from transfer operations. Fifty-eight percent of the terminal elevators use fabric filters. These are frequently located in metropolitan areas where control requirements are greater.

The typical modern fabric filter at an elevator handles 2000 to 30,000 cubic feet of air per minute. Most are package units that can be supplied by several manufacturers. The filters operate under negative pressure with the fan pulling air through the system. Felted, synthetic fabrics are the most common collection media. The air-to-cloth ratio is usually between 10:1 and 15:1. The filter bags are cleaned by reversing the air flow through them. Air flow reversal methods include forcing the dust cake off the fabric with back pressure; collapsing the cloth thereby cracking the dust cake; snapping the cake off with a pulse of compressed air; and blowing it off with a reverse jet which traverses the outside surface of the cloth.

The methods of capturing particulate emissions for each operation in the industry must be considered individually. Three possible alternative methods of control are considered for each affected facility. System 1 represents the control typically required by State regulations. The best possible system EPA could envision represents System 3 control. System 2 control represents either an intermediate method between System 1 and 3 control or is equivalent to method 3 control. These methods consider the total control of particulate matter for each facility, the capture system and the control device.

The most important characteristics of the three levels of control for each operation are discussed below.

4.1 RECEIVING (UNLOADING)

4.1.1 Trucks

In arid regions, truck receiving hoppers are often completely uncovered, but may be enclosed by a roof or tunnel in other areas of the nation. The typical capture system consists of a collection hood at the back of the receiving hopper. It may be mounted either above or below the grate. Location below the grate is preferable because the resulting downward draft helps prevent the escape of particulate matter generated in the hopper. Baffles installed under the grate can also help prevent the upward flow of particulate-laden air out of the hopper. Such systems are typically designed for a face velocity of 100 feet per minute through the grate.[2] To minimize the adverse effects of wind on collection efficiency, some type of enclosure around the receiving area is usually required.

After capture, the particulate matter is ventilated to a cyclone or fabric filter (Figure 4-1). Emission tests on existing facilities show average particulate emissions of 0.06 pound per ton (lb/T) of grain with cyclone control. Those with fabric filter control emit 0.005 lb/T of grain.[3,4]

Three levels of control were considered for truck unloading stations. System 1 (typical State regulations) requires the use of a receiving hopper, ventilated to a cyclone. Weather conditions may require the use of a shed or a roof enclosure. Method 3 (best technology) would

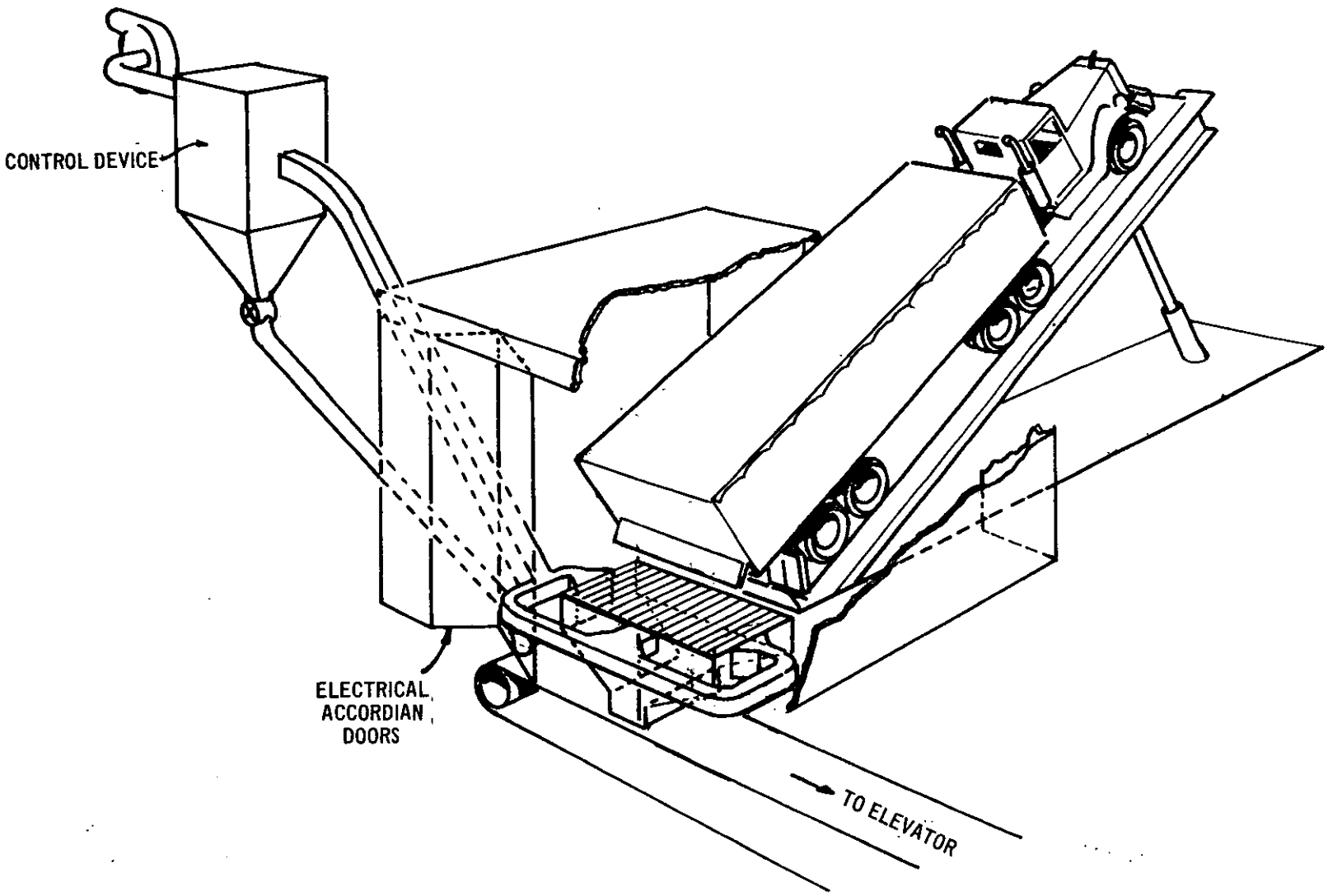

Figure 4-1. Truck unloading control system

require enclosure of the operation with a four-sided shed having two ends equipped with quick-closing doors. The receiving hopper would be ventilated to a fabric filter at a rate of approximately 12,000 cfm and would contain baffles. The receiving hopper for System 2 would be equipped identically as in System 3. However, for System 2, a three-sided shed is required with one end equipped with a quick-closing door.

Presently, no such operation as described in System 3 is in operation. The level of the proposed standard, a 0% opacity limit, has been demonstrated on presently operating System 2 facilities.

4.1.2 Railcars

4.1.2.1 Hopper Cars - Hopper cars are sometimes unloaded using the choke feed concept to reduce or eliminate particulate emissions. In this case the receiving hopper is shallow and the grain is allowed to form a cone between the opening at the bottom of the hopper and the receiving grate (see Figure 4-2). There is a momentary cloud of particulate matter as the receiving hopper fills, but very little during the remainder of the unloading operation as the grain steadily flows into the hopper.

Particulate emissions from a deep receiving hopper are contained by ventilating the particulate matter from below the grate to a cyclone or fabric filter. The efficiency of particulate pickup can be increased by installing baffles under the grate to help prevent the upward flow of particulate-laden air out of the hopper. Such systems are typically designed for a face velocity of 100 feet per minute through the grate.[2]

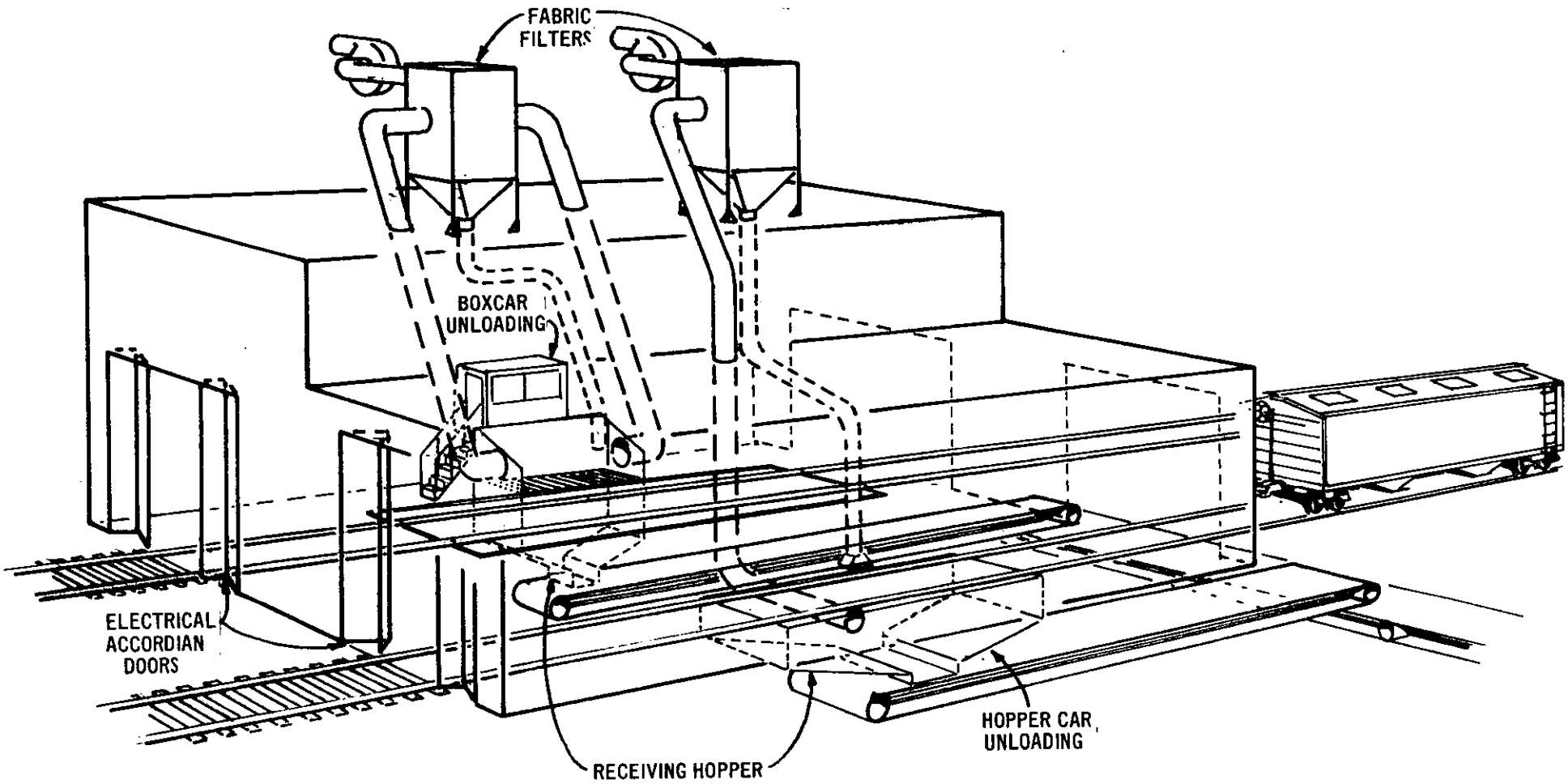

Figure 4-2. Railcar unloading control systems

Some type of enclosure around the unloading area can also prevent wind from decreasing the effectiveness of the particulate matter capture system. Fast action doors can minimize the resulting delays in unloading when enclosures are used.

Particulate emissions from cyclone-controlled hopper car unloading operations are estimated to be 0.1 lb/T of grain received. When fabric filters are used, particulate emissions are reduced to about 0.0002 lb/T of grain.[5]

Two levels of control were considered for railroad hopper car unloading stations. System 1 requires an operation equipped with a three-sided shed with one end being a quick-closing door. The receiving hopper is ventilated to a cyclone, except at port terminal elevators where fabric filters are used. System 3 and System 2 requirements are identical in this situation. A totally enclosed shed is required with quick-closing doors on two ends. The receiving hoppers are equipped with baffles and are ventilated at a rate of 15,000 to 25,000 cfm (depending on the size of the facility) to a fabric filter.

The proposed standard of no visible emissions is based on a transfer of technology from boxcar unloading facilities equipped with the control technology required by Systems 2 and 3.

4.1.2.2 Boxcars - The boxcar unloading area may be covered by a roof or have some type of shed enclosure. Since most of the particulate matter is generated in the receiving hopper, it is usually captured by a hood located below the grate and ventilated to a cyclone or fabric filter (see Figure 4-2). Baffles installed under the grate help prevent the upward flow of particulate-laden air out of the receiving hopper.

The efficiency of particulate matter pickup can be improved by stopping wind action with a flexible enclosure around the car door (Figure 4-3) or by enclosing the receiving area with some type of shed (Figure 4-2). Fast-action doors can minimize the resulting delays in unloading. Capture systems for these facilities are typically designed for a face velocity of 100 feet per minute through the grate.[2]

Particulate emissions from boxcar unloading operations with cyclone control are estimated to be 0.1 lb/T of grain received. When fabric filters are used, the particulate emissions are about 0.0002 lb/T of grain.[5]

The two levels of control investigated are identical to those systems described under hopper car unloading and the proposed standard of no visible emissions has been demonstrated at facilities equipped with the control technology required by Systems 2 and 3.

4.1.3 Barges

To minimize particulate emissions from unloading grain from barges, the bucket elevators (marine legs), receiving hoppers, and conveyor belts can be enclosed. Particulate matter is ventilated from the enclosures to a cyclone or fabric filter (Figure 4-4). Good maintenance of the enclosures is essential for good capture. Particulate emissions from barge receiving operations which use cyclones are estimated to be 0.2 lb/T of grain received. Fabric filters are able to control particulate emissions to about 0.0006 lb/T of grain.[6]

Two levels of control, the requirements of System 1 and Systems 2 and 3, were examined for barge unloading of grain. The requirements of Systems 2 and 3 are identical for the unloading of barges.

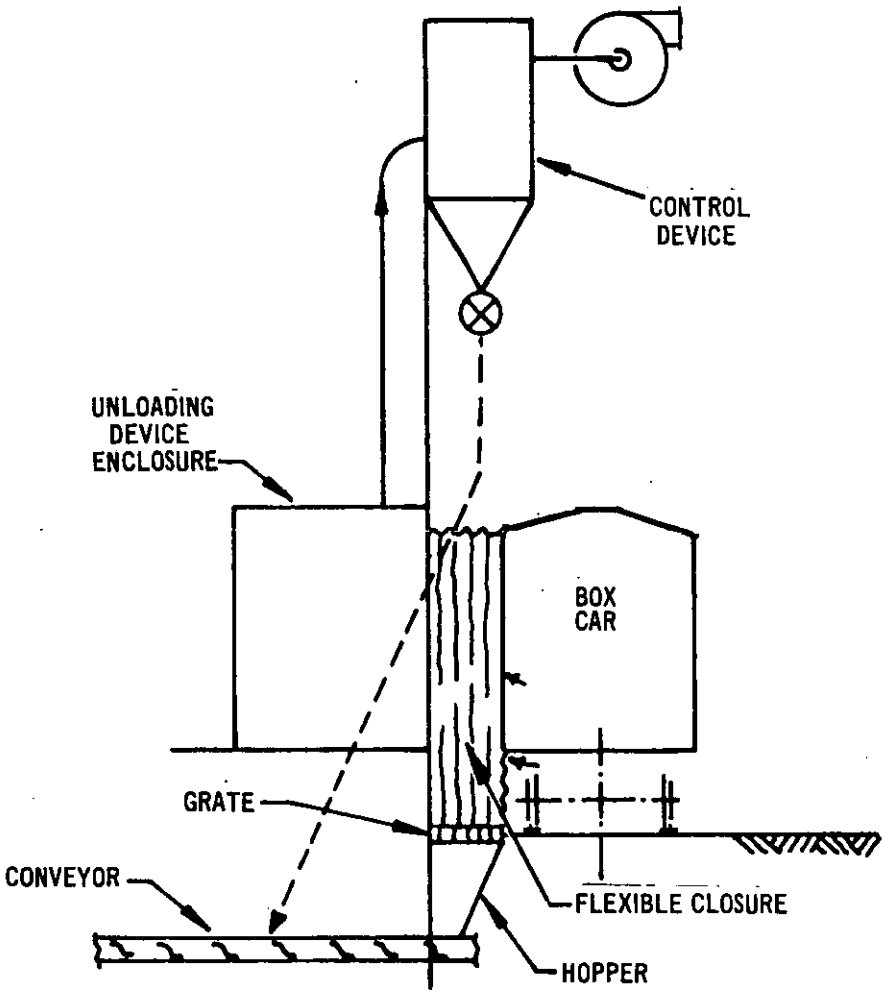

Figure 4-3. Boxcar unloading control system.

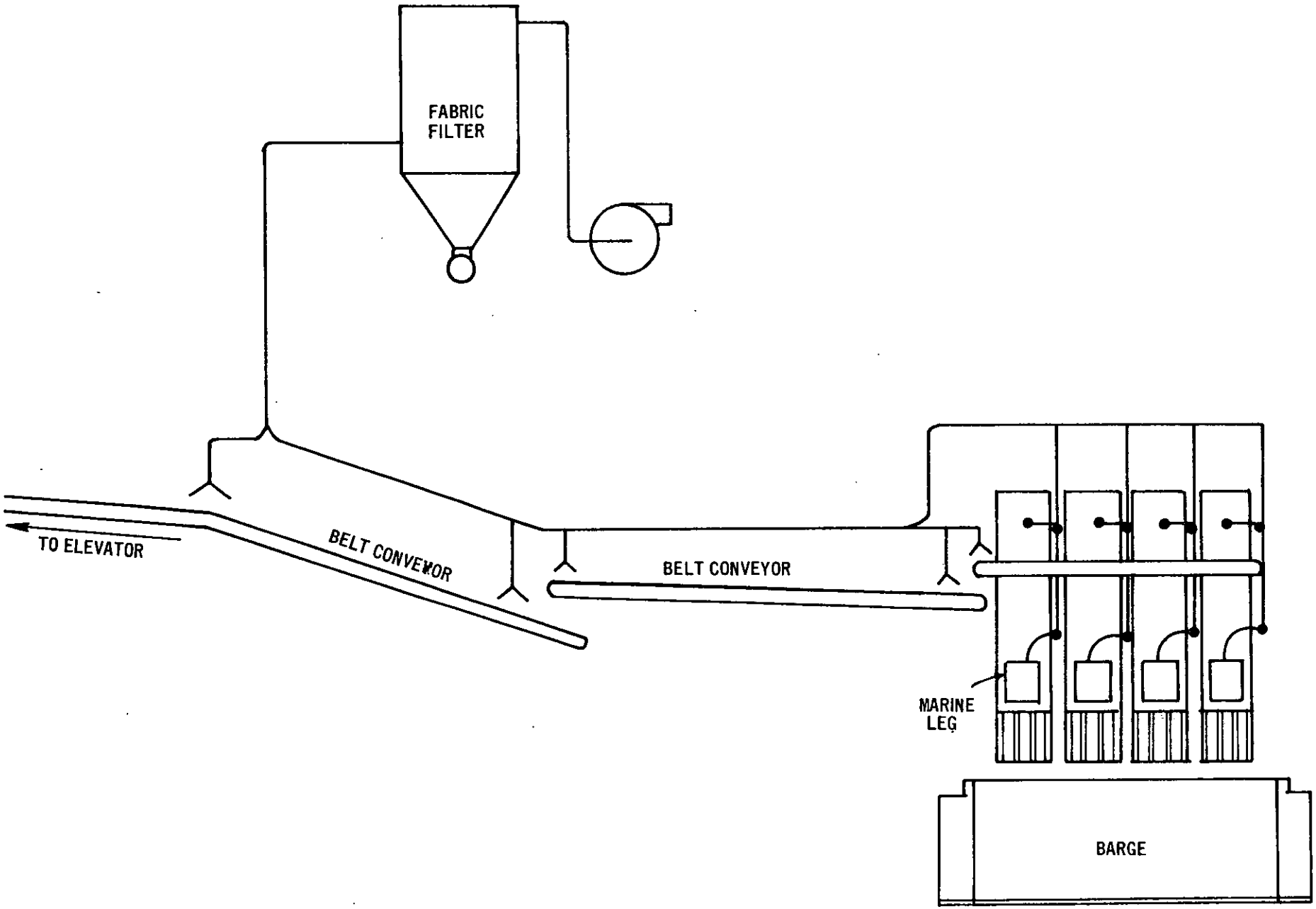

Figure 4-4. Barge receiving control system.

System 1 requires an enclosed bucket elevator (leg) with ventilation to a fabric filter. Systems 2 and 3 require an enclosed leg from the top (including the receiving hopper) to the center line of the bottom pulley. Ventilation to a fabric filter shall be maintained, on both sides of the leg and the grain receiving hopper, at a rate of at least 32.1 actual cubic meters per cubic meter of grain handling capacity (ca. 40 ft^3/bushel).

Due to the high level of visible emissions obtained, an equipment standard has been proposed. The specifications previously listed for Systems 2 and 3 have been demonstrated and EPA has based the proposed standard on these specifications.

4.2 HANDLING AND CONVEYING EQUIPMENT

4.2.1 Transfer Points

Screw conveyors are enclosed and are operated slowly (less than 100 feet per minute) so that minimal particulate matter is emitted. Drag conveyors are totally enclosed; however, air may be ventilated from the enclosure to a cyclone or fabric filter to maintain a slight negative pressure. Hoods are needed on belt conveyors only at points where the grain is disturbed (i.e., where it enters or leaves the belt). Otherwise, a column of air travels with the conveyor and does not disturb the particulate matter in the grain. Sometimes, if transfer points are close together, the belt is hooded along its entire length. The capture velocity of air into the hood should be 100 feet per minute faster than the speed of the conveyor belt (500-600 feet per minute) to overcome the laminar layer of air that accompanies the grain away from the hood.[2] Trippers and turn heads are additional transfer mechanisms. Trippers are usually hooded

and ventilated to a control device. Turn heads are usually totally enclosed or hooded.

Air and particulate matter are ventilated from the hoods to cyclones or fabric filters (see Figures 4-5 and 4-6). Particulate emissions from cyclones used to control conveyor belts are estimated to be about 0.1 lb/T of grain handled. Particulate emissions from fabric filters have been measured at about 0.0002 lb/T of grain handled.[3]

4.2.2 Legs

When grain enters the bottom of a "leg" or bucket elevator, a positive pressure is created at the top. It is necessary to relieve this pressure by venting the leg, connecting the top and bottom with a pipe or increasing the size of the housing on the downside of the leg. Particulate matter can build up in unvented legs creating explosive conditions; therefore, some insurance companies require that they be vented to minimize this possibility.

Particulate emissions from leg vents can be controlled by cyclones or fabric filters (see Figure 4-7). Cyclones are estimated to emit about 0.1 lb/T of grain handled. Fabric filters control to about 0.0002 lb/T of grain handled.

4.2.3 Scales and Garners

A scale hopper or bin and the associated surge bins (garners) may be vented to a common collector. Both cyclones and fabric filters are used. It is also possible to vent the bins to each other such that air is exhausted to a common control device.

4.2.4 Storage Silos

Normally, particulate emissions from silos are not visible and, therefore, they are not controlled. In some cases, storage silos have

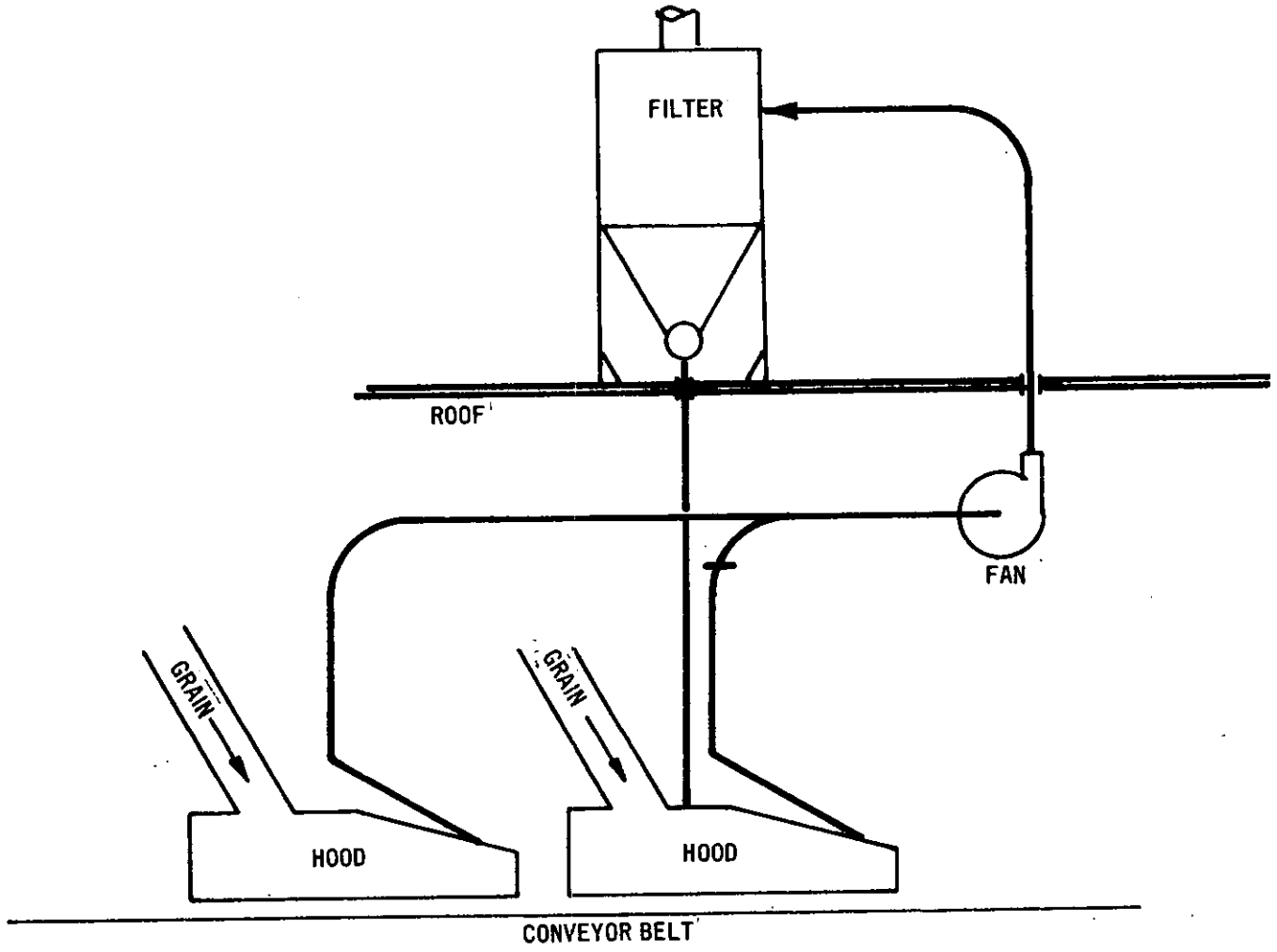

Figure 4-5. Transfer point control system.

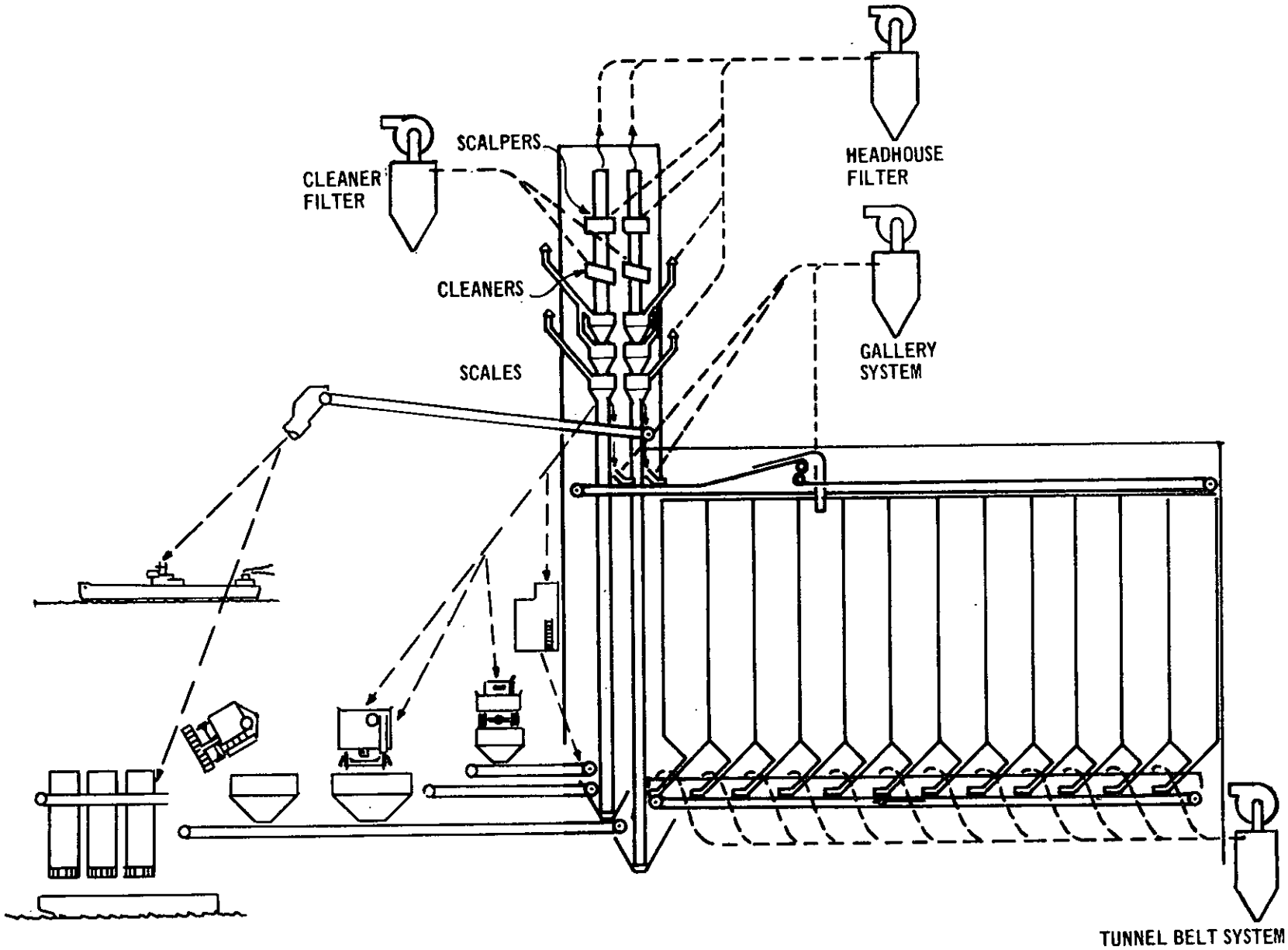

Figure 4-6. Grain handling and cleaning control system.

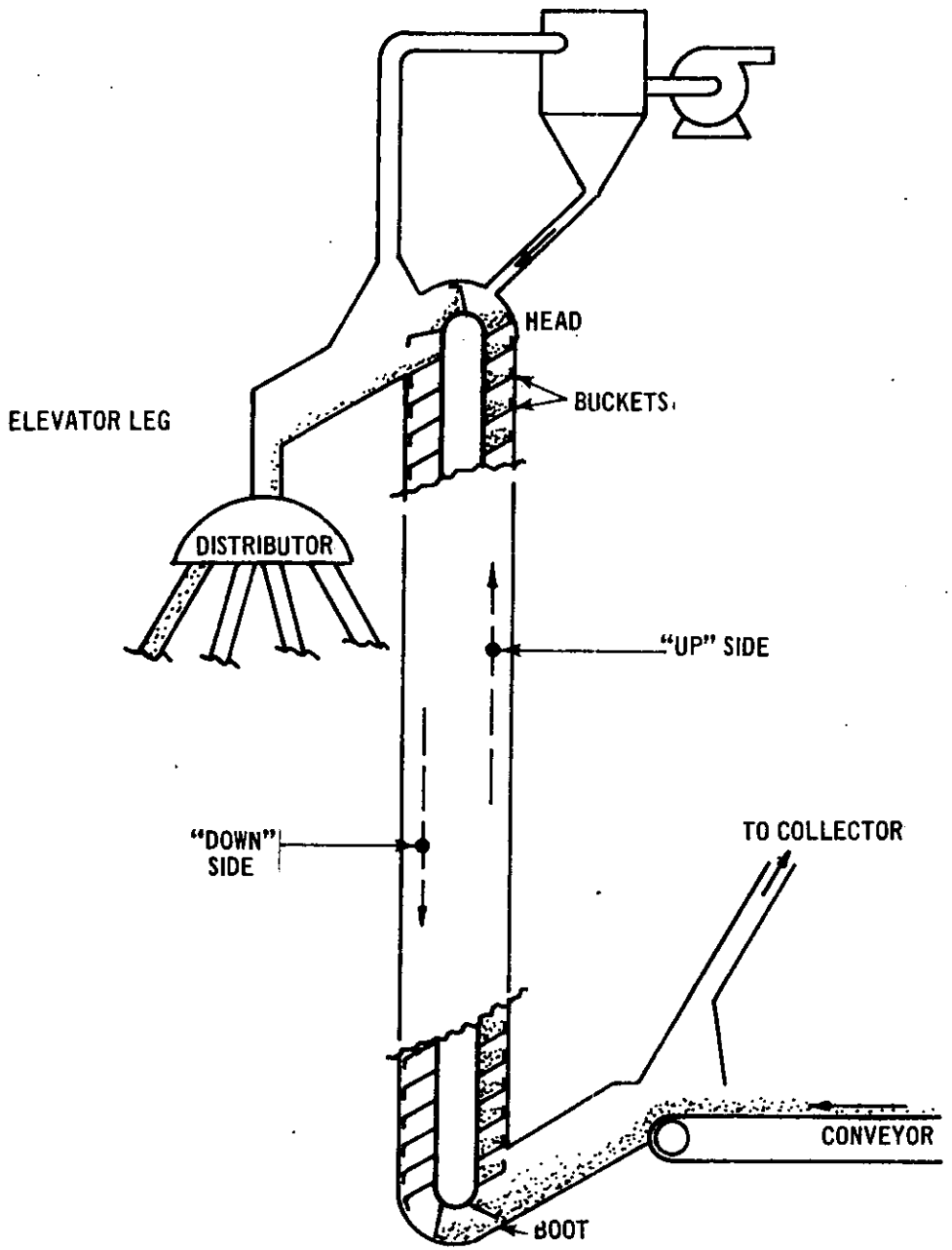

Figure 4-7. Elevator leg.

been ventilated to a fabric filter. The magnitude of particulate emissions from storage silo vents has not been estimated; however, EPA believes these emissions to be minimal and therefore does not cover silo vents under the proposed standards.

4.2.5 Scalpers and Cleaners

Particulate emissions from screen cleaners and scalpers are controlled by hooding or enclosing the equipment and ventilating the particulate matter to a cyclone or fabric filter (see Figure 4-6). The more efficient ventilated cleaners use tight enclosures around the screens and more suction to lift out light impurities. A recent development is screen cleaners which have air-tight enclosures and require no ventilation or particulate emissions control device. Scalpers are usually totally enclosed.

Particulate emissions from screen cleaners without ventilation which are controlled with cyclones are estimated to be 0.3 lb/T of grain handled and those with fabric filters can control particulate emissions to about 0.003 lb/T. Particulate emissions from cleaners with ventilation are estimated to be 0.6 lb/T with cyclone control and 0.014 lb/T with fabric filters.[7]

4.2.6 Headhouse and Other Such Structures

Fugitive particulate emissions from the headhouse and other structures which may house additional grain handling operations can be minimized by properly controlling the operations inside of these

structures. In addition, the headhouse itself can be ventilated to an air pollution control device. Particulate emissions from headhouses and similar structures have not been estimated.

4.2.7 Control Systems for Handling Operations

Two levels of control were considered in the standard setting process for grain handling operations. Typical State regulations, System 1, require grain handling operations to be ventilated to a cyclone, except at terminal elevators where ventilation to a fabric filter is required. System 3 (best technology) and System 2 requirements are identical for grain handling. All grain handling operations require ventilation to fabric filters or total enclosures.

The proposed standard of zero percent opacity has been demonstrated on System 2 and 3 grain handling operations.

4.3 DRYING

There are two types of dryers used in the industry, column and rack. Uncontrolled column dryers are cleaner than uncontrolled rack dryers by virtue of their design. Emission tests, which can only be used as a guide in developing the standards due to testing inaccuracies, performed on column dryers with no control showed particulate emissions of about 0.25 lb/T,[8] and particulate emissions of about 0.18 lb/T of grain dried from a column dryer equipped with a 58 mesh screen.[9] Particulate emissions from a column dryer with 0.05 inch diameter perforations in the column sheeting were measured at 0.05 lb/T of grain dried.[10]

The simplest control technique used on a rack type dryer is a screen house. A large enclosure is built around the dryer exhaust with 24 mesh screen to retain the beeswings. The beeswings settle to the ground and are periodically removed by hand. More sophisticated vacuum-cleaning control devices use metal or polyester screens, as shown

in Figure 4-8. Commonly used screen sizes vary from 35 to 100 mesh. Vacuum heads automatically sweep the screen to clean it of captured particles. Particulate emissions from rack dryers are estimated to be 1.5 lb/T of grain dried when a 24 mesh screen is used, about 0.3 lb/T when a 50 mesh screen is used, and were measured at 0.05 lb/T when a vacuum-cleaned 100 mesh screen was used.[11]

Figure 4-9 shows the results of emission tests performed on rack and column dryers. This graph shows that particulate emissions from a rack dryer equipped with a 50 mesh vacuum-cleaned screen are approximately equal to particulate emissions from a column dryer with no screens. It must be noted again that these data can only be used as a guide due to the testing inaccuracies encountered.

Three levels of control were discussed for column grain dryers and for rack grain dryers. EPA determined that typical State regulations, System 1, require no screens (filters) on column dryers and 24-30 mesh screens (filters) on rack dryers. System 3 control requires a 100 mesh vacuum-cleaned screen (filter) on both column and rack dryers. System 2 would require no screens (filters) on column dryers and 50 mesh vacuum-cleaned screens (filters) on rack dryers.

System 2 column dryers have demonstrated that the proposed standard of 0% opacity is achievable. Column dryers with column perforation plate hole diameters of 0.084 inch or less have also demonstrated compliance with the proposed 0% opacity standard. System 3 is economically prohibitive for column dryers as explained in Chapter 6. Using 100 mesh vacuum-cleaned screens (filters) instead of 50 mesh vacuum-cleaned screens (filters) on rack dryers results in increased operating costs and only minimal reduction in particulate emissions. Particulate emissions from column dryers with no screens (filters) are approximately equivalent

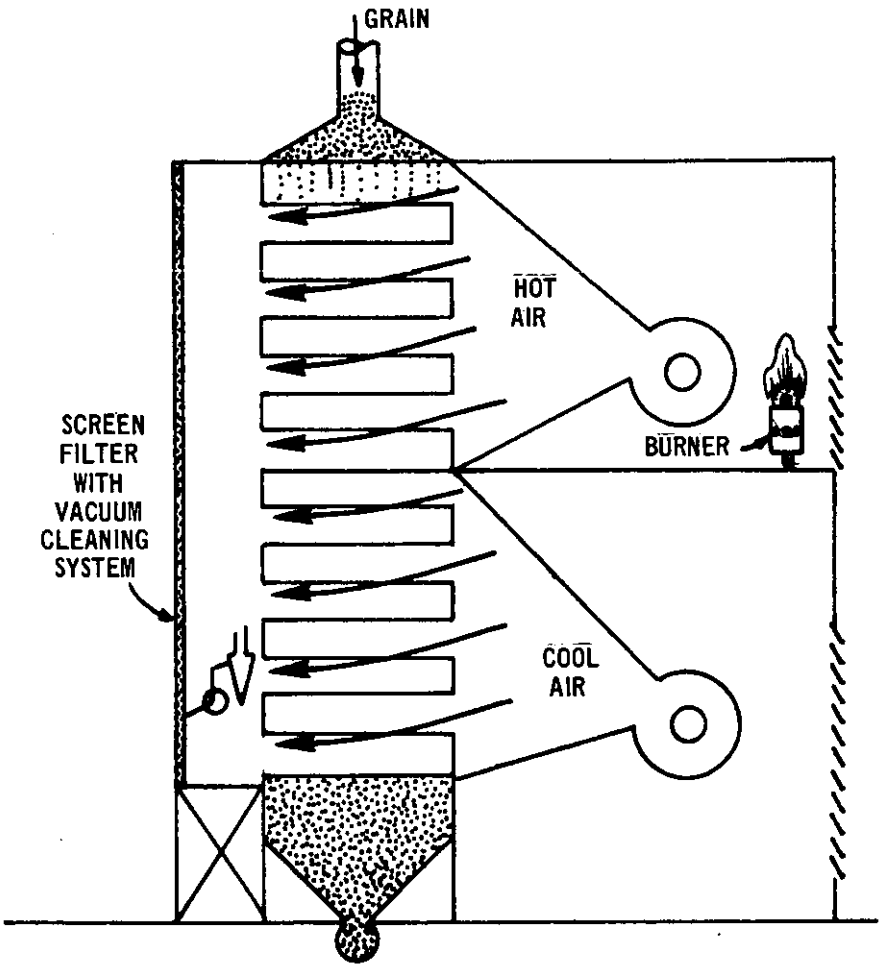

Figure 4-8. Rack dryer with screen filter.

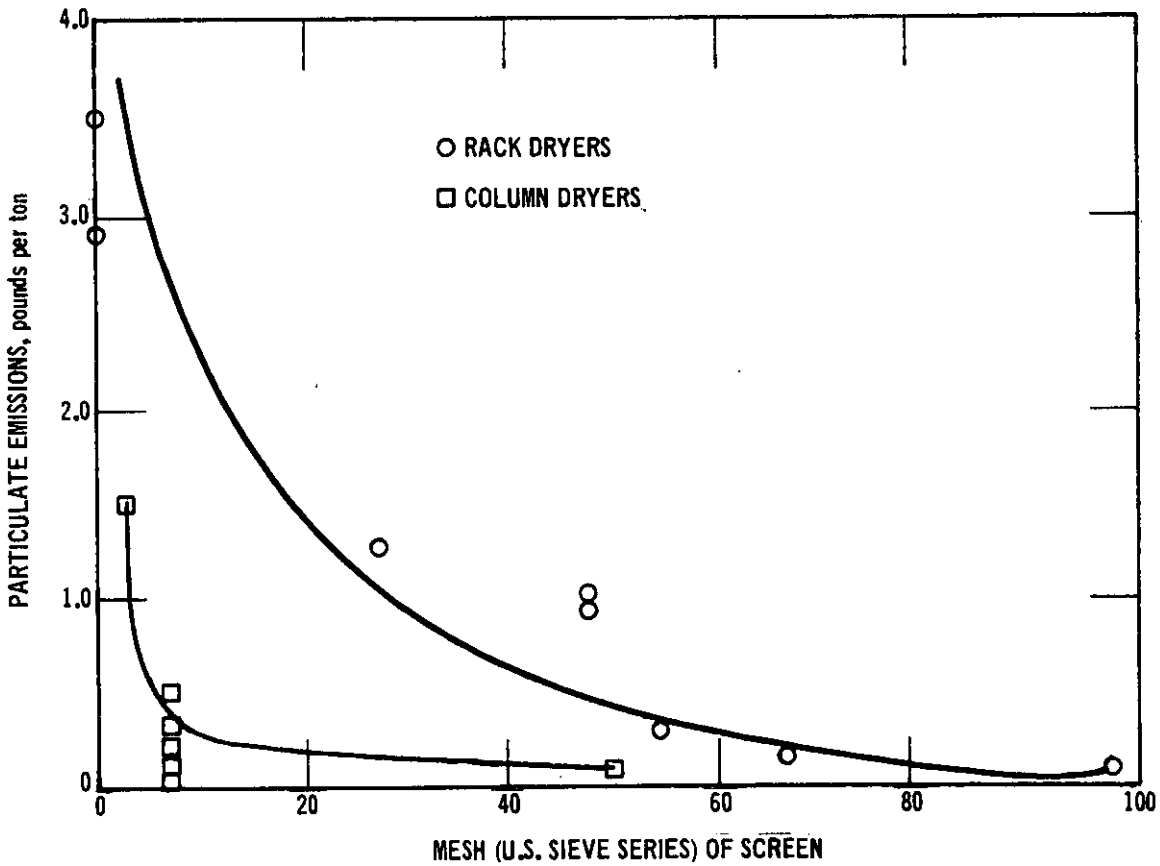

Figure 4-9. Dryer emissions versus screen size.

to particulate emissions from rack dryers with 50 mesh screens (filters). Chapter 8 explains this rationale in more detail.

4.4 LOADING

4.4.1 Trucks

Very few truck loading stations have ventilation type control systems. Particulate emissions from truck loading can be minimized by reducing the free-fall distance between the end of the loading spout and the truck bed. This can be accomplished with a telescoping spout as shown in Figure 4-10 or with a canvas sock extension. The height of a telescoping spout can be quickly adjusted to any level to maintain it at the surface of the grain. It can also be designed to move laterally to spread the grain. Very little maintenance would be required. A canvas sock can serve the same purpose; however, the height is not as easily varied and the flexible material does not work well in other than a vertical position. Canvas socks must be replaced frequently because some grains are very abrasive and quickly wear holes through the canvas. A permanent hooding device can also be installed but must take into account the variety in size and height of trucks. Capture can be improved if the loading area is enclosed by some type of shed. Particulate emissions from truck loading facilities controlled with cyclones are estimated to be 0.03 lb/T. Fabric filters can control particulate emissions to about 0.001 lb/T.

EPA considered three levels of control in developing the proposed standards for truck loading stations. The requirements of typical State standards is System 1. This requires ventilation to a cyclone. Weather conditions may require a shed or a roof to protect the loading operation. System 3, considered by EPA to be the best control technique, requires

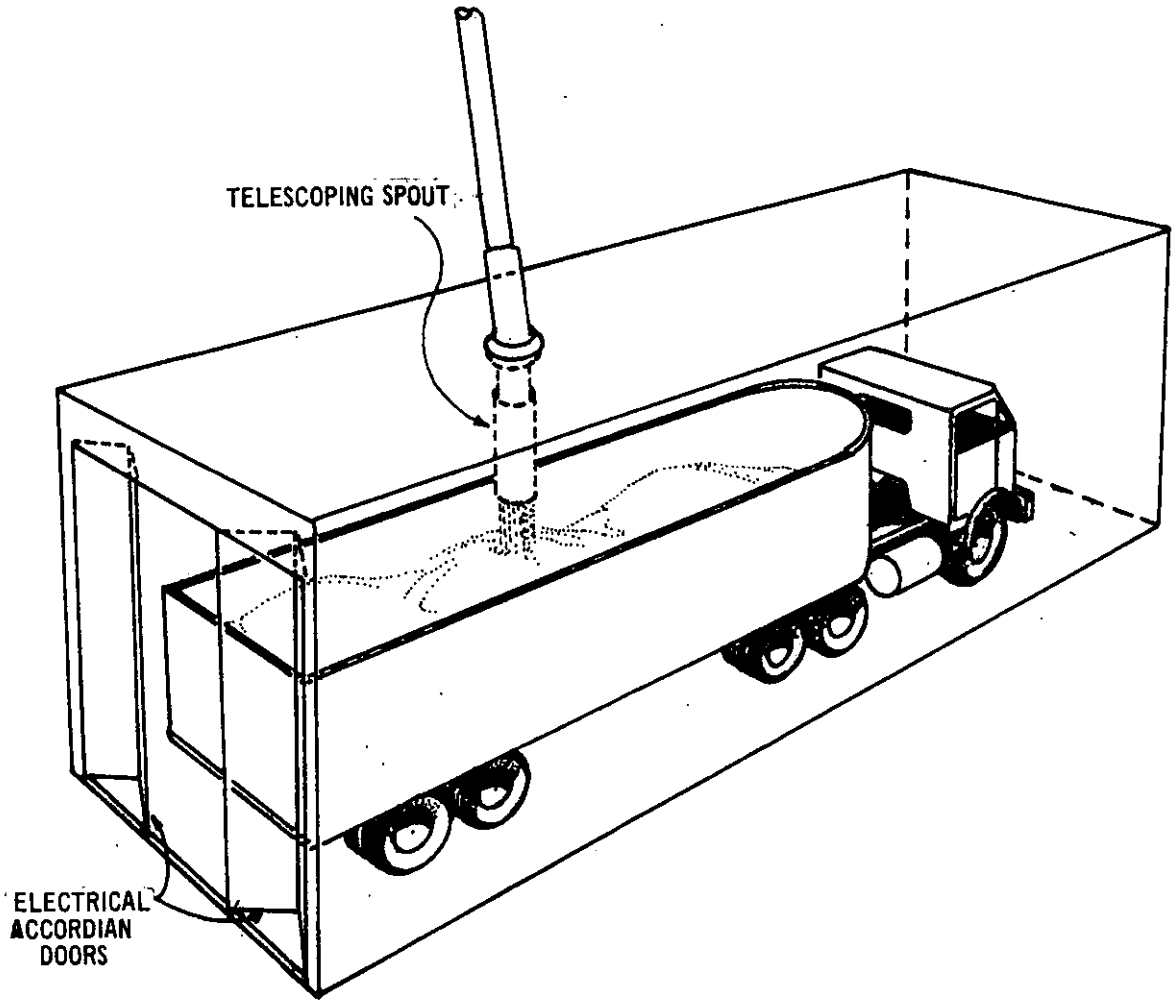

Figure 4-10. Truck loading control system.

ventilation to a fabric filter and a totally enclosed shed around the truck loading operation. Two ends can be equipped with quick-closing doors. System 2 requires ventilation to a fabric filter as in System 3; however, it requires a shed with only three sides. One end can be equipped with a quick-closing door.

The proposed standard of 10% opacity has been achieved by a System 2 truck loading operation. Presently no such operation as System 3 exists in the field.

4.4.2 Railcars

4.4.2.1 Hopper Cars - Particulate emissions from hopper car loading can be similarly minimized by use of a telescoping loading spout or a canvas sock extension. All hatch doors on the car must be kept closed except for the one grain is entering. This allows the car to act as its own settling chamber.

Another technique used is to install a hood at the discharge of the loading spout. The particulate matter is captured and ventilated to a control device as shown in Figure 4-11. In this case also, the hatch doors must be kept closed. Control can be further improved if the loading area is enclosed by some type of shed. Controlled particulate emissions from hopper car loading facilities which use cyclones are estimated to be 0.03 lb/T. Fabric filters can achieve about 0.001 lb/T.[12]

There are basically three control technology systems for railroad hopper car loading. System 1, which reflects typical State regulations, requires a hooding system ventilated to a cyclone. System 2 requires the same type of hooding system but with ventilation to a fabric filter. In addition, a special loading spout and a shed with two open ends around the operation are required. System 3, the best

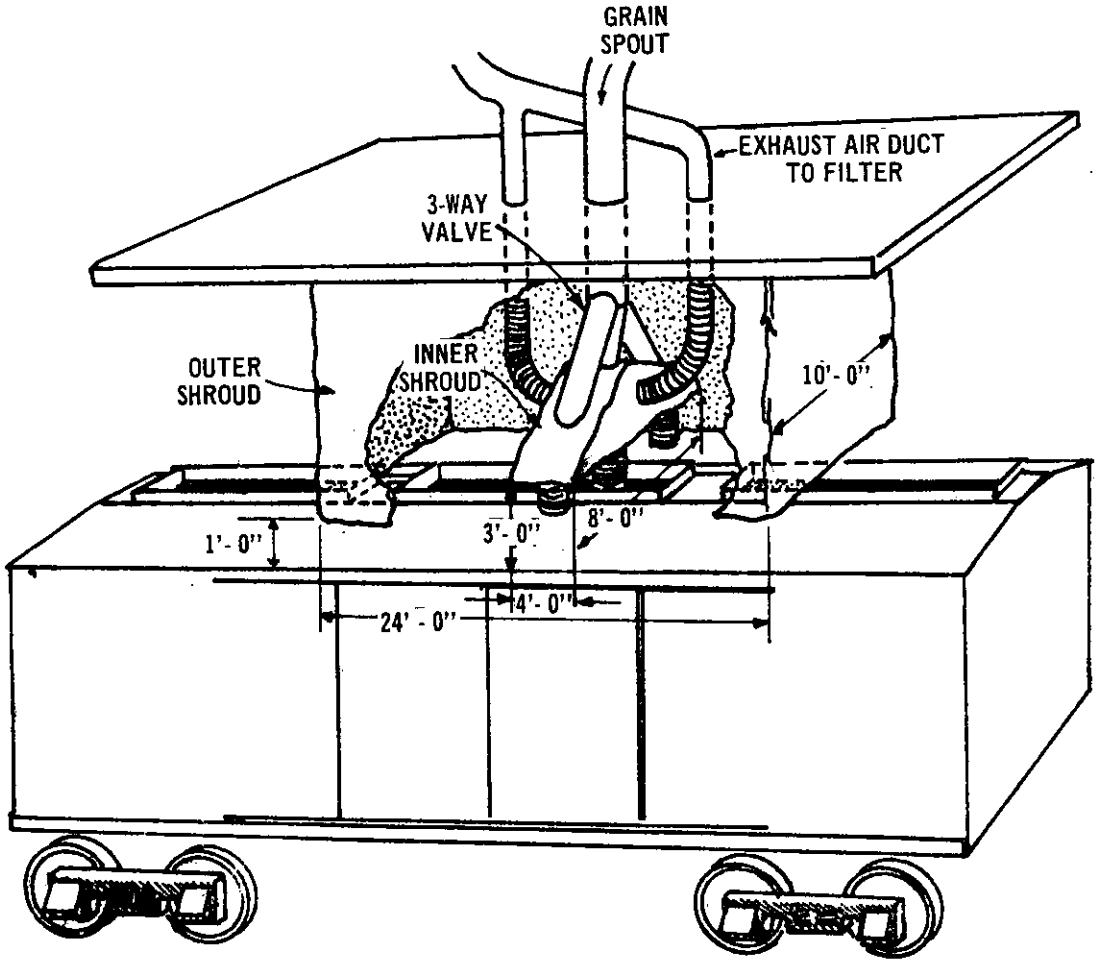

NOTE: 3-WAY VALVE LEADING TO FLEXIBLE LOADING SPOUTS PERMITS LOADING OF CENTER OR SIDE OPENINGS IN TOP OF HOPPER CARS.

Figure 4-11. Hopper car loading control system.

possible control technology, requires the same hooding, ventilation and loading spout as System 2. However, a totally enclosed shed with quick-closing doors on two ends is required.

No such operation as System 3 is presently in use. System 2 operations have demonstrated that the proposed opacity limit of 0% is achievable.

4.4.2.2 Boxcars - Presently, very few boxcar loading stations use any type of control device. The particulate emissions can be captured by a hood located beside the track as shown in Figure 4-12. An enclosure should be extendable from the hood to the door of the car. The particulate matter can then be ventilated to a cyclone or fabric filter. Control can be improved if the loading area is enclosed by some type of shed. Controlled particulate emissions from boxcar loading facilities equipped with cyclones are about 0.03 lb/T of grain loaded. A fabric filter would emit less than 0.001 lb/T.[12]

Railroad boxcar loading operations, as in railroad hopper car loading operations, have three levels of control which were considered by EPA. System 1 requires some form of hooding system ventilated to a cyclone. System 3 requires a totally enclosed shed with quick-closing doors on two ends and a tightly sealed (side-door) hooding system ventilated to a fabric filter. System 2 requirements are identical to System 3 requirements except that a shed with two open ends is required.

EPA is proposing a zero percent opacity standard for railroad boxcar loading stations based on a transfer of technology from railroad hopper car loading stations.

4.4.3 Ships and Barges

Particulate emissions from barge loading can be minimized by reducing the free-fall distance from the end of the spout to the grain surface

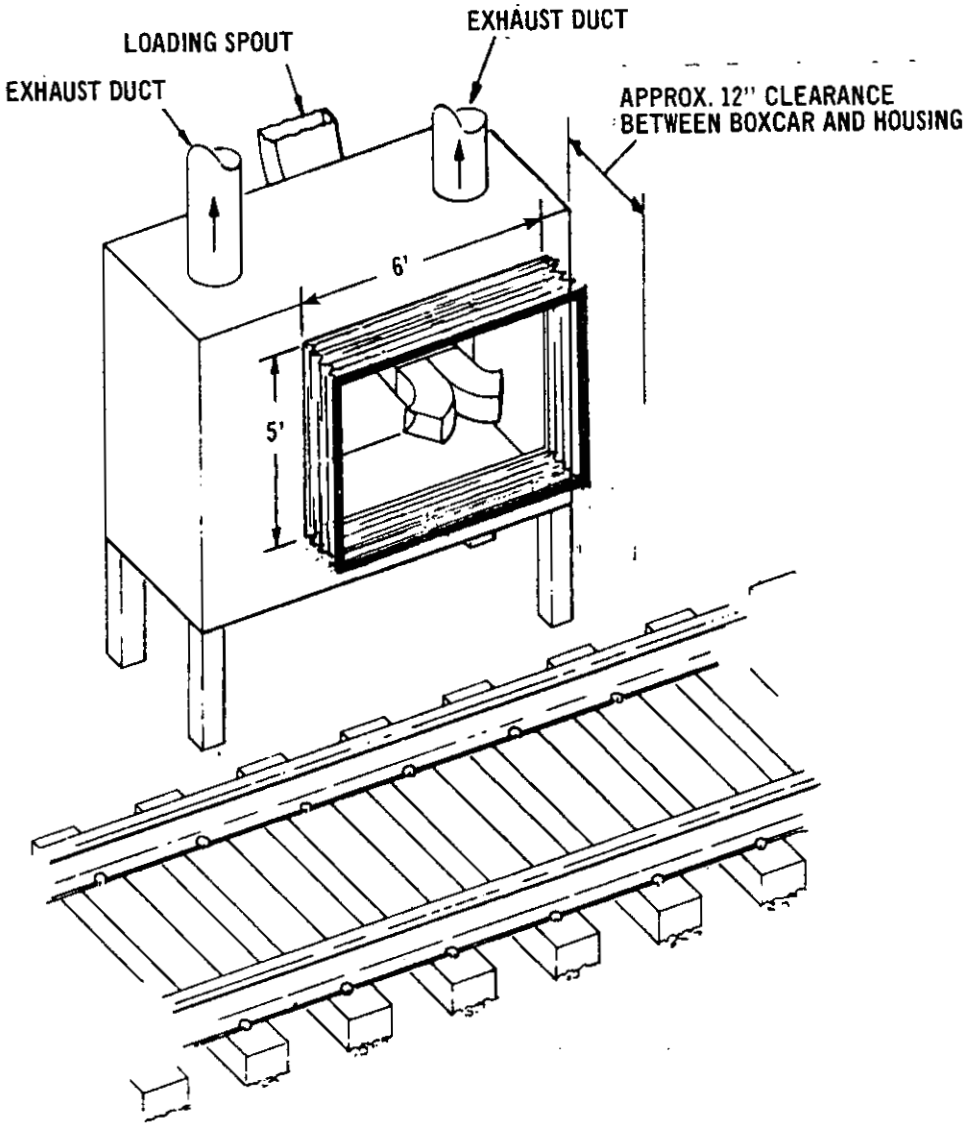

Figure 4-12. Control system for boxcar loading.

as discussed in the truck loading section. All hold hatches not being used should be closed. In addition, ventilation from the discharge end of the spout may be necessary (Figure 4-13). The particulate matter ventilated from the end of the spout can be collected in a cyclone or fabric filter. Particulate emissions from cyclones which control barge loading are estimated to be 0.06 lb/T. Fabric filters can achieve about 0.001 lb/T.

Two approaches are used to control particulate emissions from ship loading.

a. The entire hold is covered with canvas or plastic except where the loading spout enters. Particulate matter may be ventilated from beneath the cover to a cyclone or fabric filter.

b. A telescoping loading spout is kept extended to the grain surface. Ventilation is applied at the end of the spout and the particulate matter is collected in a cyclone or fabric filter as shown in Figure 4-13.

Two variations of this latter approach were observed by EPA. The end of the loading spout on one operation was extended into the grain surface to minimize the generation of particulate emissions. The other operation used a "dead box" system at the end of the loading spout to slow the flow of the grain as it entered the hold. The end of the spout was kept a slight distance (six inches to one foot) above the grain level in the hold.

Either approach can be ducted to a cyclone control device which will emit about 0.06 lb/T of grain loaded or a fabric filter which will emit about 0.001 lb/T.[5]

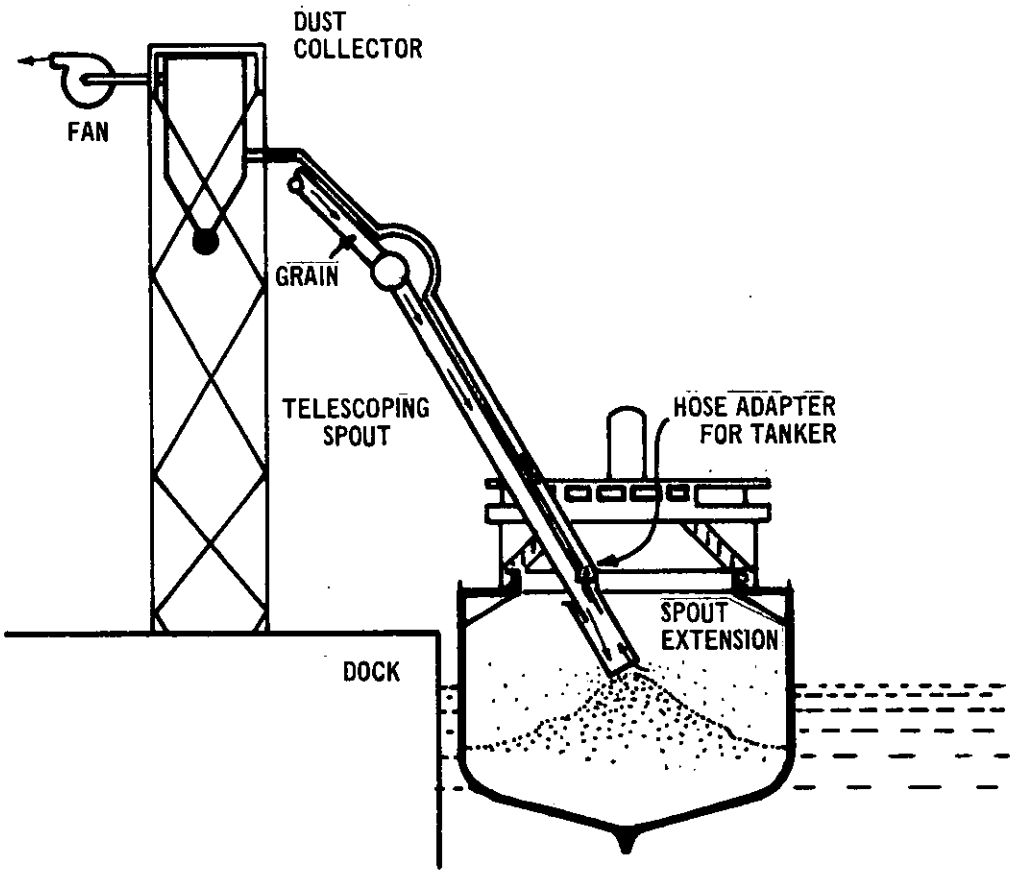

Figure 4-13. Barge or ship loading control system.

Two levels of control were investigated by EPA for barge and ship loading stations. System 1 requires a choke-feed loading spout with ventilation to a cyclone. Systems 2 and 3 require a similar choke-feed loading spout but with ventilation to a fabric filter.

The best control system has demonstrated that the proposed opacity limits of 10% for general loading and 15% for topping-off are achievable.

4.5 ALTERNATIVE CONTROL SYSTEMS

The individual control techniques for each affected facility previously described in this chapter were formulated into three alternative levels of control. Each of these alternative systems control all of the particulate emission sources from a complete grain elevator. For purposes of determining the economic and environmental impacts, EPA developed six model elevators and six model processor elevators. These model elevators are discussed in Chapter 6. The three alternative control systems are summarized in this section. To determine the true impact of a control system on air pollution, the reduction in air pollution beyond that which would otherwise be achieved by state or local regulations must be determined. In most states, grain elevators are subject to a general process weight regulation designed to minimize particulate emissions from any source. Examples of such regulations are illustrated in Figure 4-14. With these regulations the allowable particulate emissions are a function of the amount of material being handled. The stringency of such regulations is often totally dependent on interpretation by the enforcement agency.

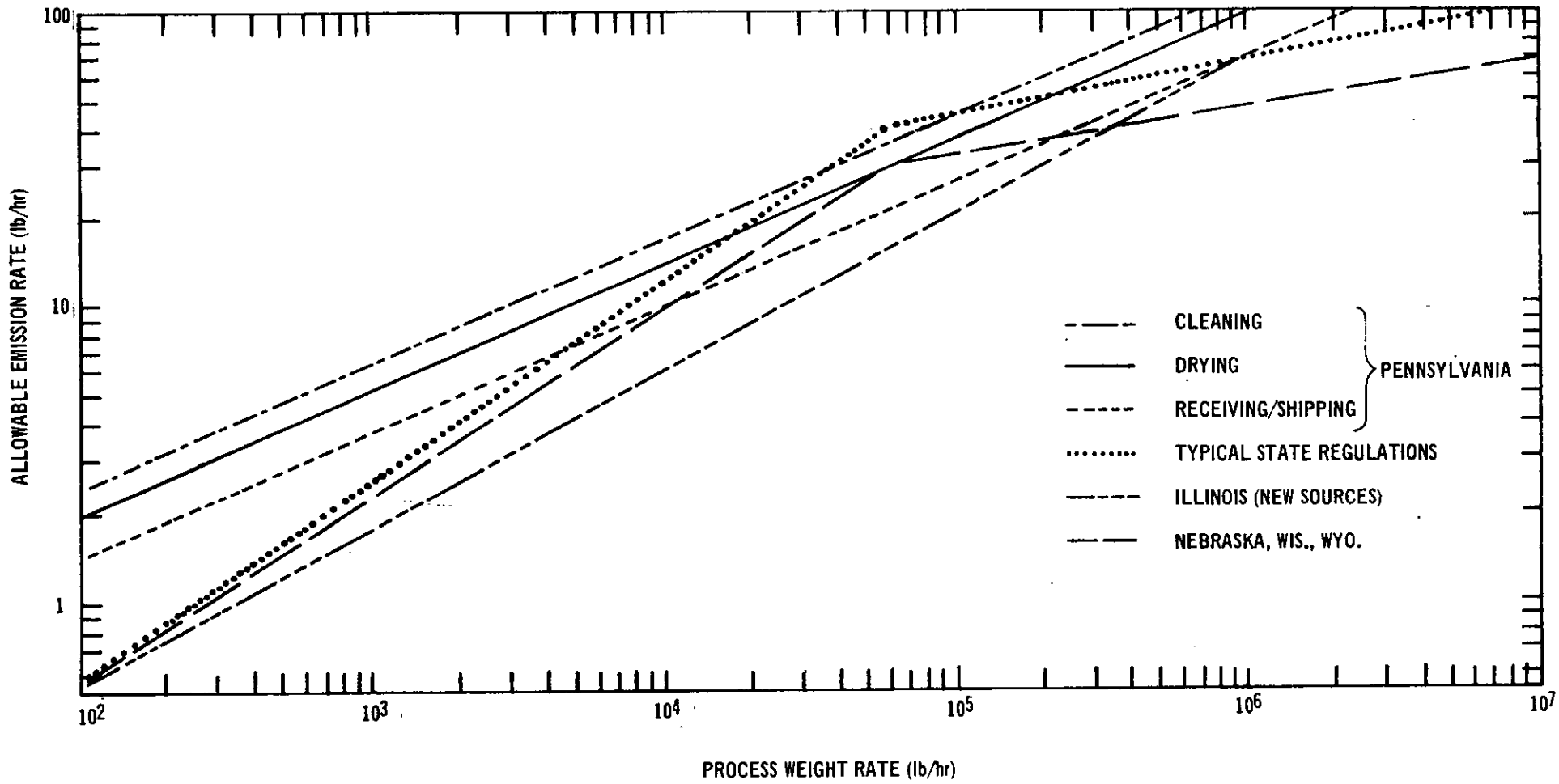

Figure 4-14. State regulations applicable to grain elevators.

Telephone conversations with members of several state agencies revealed that difficulty has been experienced in defining the source entities at a grain elevator to which the regulation is appropriate. Most states appear to interpret each process within an elevator as a separate emission source which can emit the maximum allowed by the process weight regulation. The possible extremes, of course, are to regulate: (a) the entire elevator as one source or (b) each vent or control system as a separate source. If the same process curve is used regardless of interpretation, it is obvious that allowable emissions increase with the number of emission points if each vent system is examined independently. Typical state visible emission regulations allow fugitive particulate emissions up to 20 percent opacity.

From this information, EPA has concluded that a typical State standard (designated as System 1) requires the following:

System 1

1. High-efficiency cyclones on all affected facilities (excluding dryers), except railcar unloading at port terminals, barge and ship loading at inland terminals, and barge and ship unloading where fabric filter controls are required.
2. No screens (filters) on column dryers and 20 to 30 mesh screens on rack dryers.

System 2 represents a more stringent level of control and is the control system on which EPA has based the proposed standards. System 2 consists of the following:

System 2

1. Fabric filter control on all affected facilities excluding dryers.
2. No screens (filters) on column dryers and 50 or finer mesh vacuum-cleaned screens on rack dryers.
3. Three-sided shed on truck unloading and truck loading.
4. Shed with two open ends for boxcar and hopper car loading.
5. Totally enclosed shed for railcar unloading.
6. Totally enclosed leg for barge and ship unloading.

System 3 represents the best control technology possible not considering costs. System 3 is identical to System 2 except for the following items:

System 3

1. 100 mesh vacuum-cleaned screens (filters) on column and rack dryers.
2. Totally enclosed sheds on truck unloading, truck loading, boxcar loading and hopper car loading operations.

REFERENCES

1. "Emissions Control in the Grain and Feed Industry, Volume I - Engineering and Cost Study," by Midwest Research Institute for the U. S. Environmental Protection Agency, EPA 450/3-73-003a, December 1973, pp. 365-367.

2. "Environmental Controls for Feed Manufacturing and Grain Handling," American Feed Manufacturers Association, Chicago, Illinois, 1971.

3. Logan, Thomas, "Emission Test Report" for Plants A and G, tests were conducted in March 1972.

4. Ward, Thomas, "Emission Test Report" for Plant B, EMB Test No. 72-CI-33(GRN), prepared for EPA by Environmental Engineering, Inc., August 1972.

5. Pfaff, Roger O., "Emission Test Report" for Plants C and J, EMB Test No. 74-GRN-8, January 1974.

6. Ward, Thomas, "Emission Test Report" for Plant D, EMB Test No. 73-GRN-2, prepared for EPA by York Research Corp., November 1972.

7. Ward, Thomas, "Emission Test Report" for Plant H, EMB Test No. 73-GRN-5, the tests were conducted in April 1973.

8. "Emission Control in the Grain and Feed Industry, Volume II - Emission Inventory," by Midwest Research Institute for the U.S. Environmental Protection Agency, EPA 450/3-73-003b, September 1974, p. 20.

9. Gerstle, Richard and DeWees, William, "Emission Test Report" EMB Test No. 74-GRN-9, prepared for EPA by PEDCo Environmental, the test was conducted November 1973.

10. "Particulate Emission Tests on Zimmerman Grain Dryer at Elliott, Illinois," prepared by Industrial Testing Laboratories, Inc., Report No. 27-11-158E, St. Louis, November 1972.

11. Ward, Thomas, "Emission Test Report," EMB Test No. 73-GRN-4, the test was conducted in April 1973.

12. Riley, C.E., "Emission Test Report" for Plants I and K, EMB Test No. 74-GRN-6, May 1974.

5. EMISSION DATA TO SUBSTANTIATE THE PROPOSED STANDARDS

Emission data presented in this section are divided into particulate emission data from fabric filters, particulate emission data from grain dryers, and visible emission/opacity data. EPA inspected 45 elevators in an attempt to find best demonstrated technology in the grain elevator industry. Particulate emissions were measured from 11 processes controlled with fabric filters at eight of these elevators. EPA attempted to measure particulate emissions from two grain drying operations. Visible emission/opacity observations were taken at eleven elevators from both the fabric filters and the sources of fugitive emissions. The results of these emission tests are used to substantiate the proposed standards. Appendix C describes the tested facilities and provides more detail on the results of the mass particulate measurements.

5.1 PARTICULATE EMISSION DATA - FABRIC FILTERS

EPA measured particulate emissions from 11 of the best controlled processes selected from those at the 45 elevators that were inspected. The results summarized in Figure 5-1 cover mass particulate matter emissions resulting from unloading, handling, cleaning, and loading operations equipped with fabric filter control. Facilities A and B are truck unloading stations with ventilation of the receiving hoppers and with three and two-sided enclosures, respectively. Facility C is a totally enclosed boxcar unloading station at a terminal elevator. Facilities D and E are barge unloading operations (marine legs) at port terminal elevators. Facility F is a completely hooded tunnel conveyor belt and leg boot system, and Facility G is a receiving conveyor belt and leg boot system.

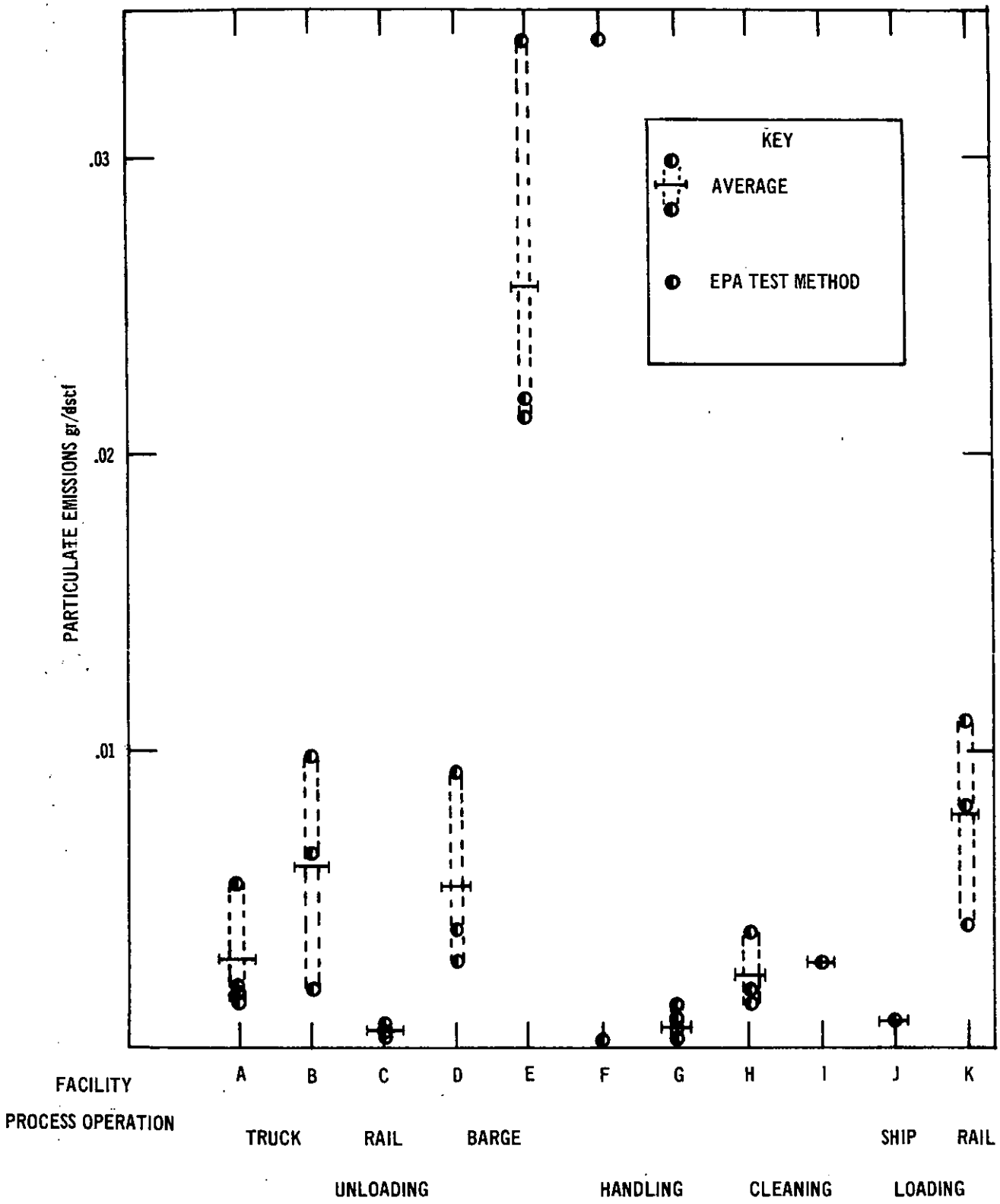

Figure 5-1. Particulate emissions from processes controlled by fabric filters.

The fabric filter at Facility H collects particulate matter and chaff ventilated from the whole wheat cleaning system of a flour mill. Uncontrolled particulate emissions from this cleaning process are greater than from cleaning processes at elevators; therefore, the controlled particulate emissions should be representative of or higher than what can be achieved at grain elevators. Facility I is a corn cleaner with some ventilation. Facility J is a ship loading station and Facility K is a railcar loading station with a shed with two open ends. In all cases, the processes are controlled by fabric filters using felted, synthetic fiber bags, reverse air cleaning and an air-to-cloth ratio of about 10:1.

Whenever possible, all test runs at each facility were conducted while only one of the four major grains (corn, wheat, soybeans, milo) was processed. However, at some facilities a mixture of these grains was handled through the test period. Facilities A, G, and I handled only corn; Facility B, only soybeans; and Facilities C, H, and J, only wheat. Facility F handled milo exclusively during the first four test runs and wheat during the fifth test. The remaining facilities (D, E, and K) handled mixtures of two or four grains. The data do not show any effect on the emissions from the type of grain processed.

At most of the facilities, three test runs (2 hours each) were conducted according to EPA's Method 5 except that no heaters were used on the sampling probe and filter holder. Only one run of 105 minutes was obtained at Facility I because an adequate supply of corn was not available to maintain longer operation of the corn

cleaner. Process operation was normal during all the tests except as reported below.

Very slight visible emissions were evident from the fabric filter exhaust at Facility E, and several large particles were caught in the test train. This indicated a leak in the fabric filter during the test; therefore, data from test E are not considered valid.

The fourth of five test runs at Facility F was conducted when the last portion of milo was being pulled from a storage bin and was being "turned" (moved to another bin). Particulate matter concentrations in the fabric filter inlet increased from 0.23 grains per dry standard cubic foot (gr/dscf) in previous test runs to 0.90 gr/dscf. The .034 gr/scf measured at the fabric filter exhaust during the fourth test run was over 100 times higher than the other runs. The material caught in the sample train, unlike particulate matter from grain that is normally encountered, contained a powdery material. Apparently, the milo was contaminated; therefore, the results of the fourth test run were not considered representative of normal process operation.

No chemical or physical change takes place in the grain or particulate matter as it proceeds through the elevator. Therefore, fabric filter particulate emissions from one process should not vary significantly from another. This assumption is verified by the test data. The average particulate emissions concentration from all facilities (excluding Facility E and run 4 at Facility F) is .003 gr/dscf.

5.2 PARTICULATE EMISSION DATA - DRYERS

EPA attempted to measure particulate emissions from two grain drvers. The data collected, however, can only be used as a guide in developing the standard due to the numerous difficulties encountered in the measurement technique. The Agency has concluded that methods for measuring particulate emissions from grain dryers are not available at this time.

Facility L, a rack dryer controlled with a screen filter with 150 micron openings (100 mesh), was tested by EPA. Corn was being dried and the process was operating normally. Particulate emissions of 0.05 lb/ton were measured from this facility.[1]

Facility M, a column dryer controlled by a screen filter with 300 micron openings (58 mesh), was also tested by EPA. Corn was being dried and the process was operating normally. Particulate emissions of 0.18 lb/ton of grain dried were measured from this facility.[2]

5.3 VISIBLE EMISSION/OPACITY DATA

Visible emission/opacity observations were taken at 11 elevators covering both fabric filters and sources of fugitive emissions. Appendix C describes the tested facilities in more detail. Figure 5-2 summarizes the visible emission/opacity data for all the fugitive particulate emission sources at grain elevators, except barge and ship unloading equipment. This chart gives the average, standard deviation, range, and positive 95 percent confidence level of the six-minute opacity averages for each of these affected facilities. The proposed opacity standards for these sources are based on the positive 95 percent confidence level.

Figure 5-2. VISIBLE EMISSION/OPACITY DATA SUMMARY FOR FUGITIVE PARTICULATE EMISSION SOURCES AT GRAIN ELEVATORS (EXCLUDING BARGE AND SHIP UNLOADING EQUIPMENT)

FACILITY	SIX MINUTE OPACITY AVERAGES					PROPOSED VISIBLE EMISSION/OPACITY STANDARDS
	N	$\bar{X}$(%)	S(%)	RANGE*(%)	+95% LEVEL*(%)	
1. Truck Unloading	138	.02	.09	NVE-1	0 (.2)	0% Opacity
2. Railcar Unloading	20	0	0	ALL NVE	0	No Visible Emissions
3. Grain Handling	36	0	0	ALL NVE	0	0% Opacity
4. Truck Loading	30	4.1	2.5	1-10	8(8.2)	10% Opacity
5. Railcar Loading						
a. Boxcar Loading	6	3.7	1.1	3-5	6(5.5)	0% Opacity
b. Hopper Car Loading	24	0	0	NVE-0	0	0% Opacity
7. Barge and Ship Loading						
a. Topping off	18	5.7	4.8	NVE-17	14(13.6)	15% Opacity
b. General	49	3.4	2.6	NVE-9	8(7.6)	10% Opacity
8. Drying: a. Column	126	.04	.15	NVE-1	0(.25)	0% Opacity
b. Rack	5	0	0	NVE-0	0	0% Opacity

KEY:
N= Number of 6 minute Averages
$\bar{X}$= Average
S= STD Deviation
NVE= No Visible Emissions
*Opacity values have been rounded off to the nearest whole number. The actual positive 95 percent confidence level is given in parentheses.

The visible emission/opacity data are also summarized for each affected facility in this section. Visible emission/opacity data were gathered using EPA Reference Method 9, originally promulgated in the FEDERAL REGISTER on December 23, 1971 (36 FR 24877) and revised on November 12, 1974 (39 FR 39872). In obtaining visible emission data for the fugitive sources of particulate matter at grain elevators, EPA made a distinction between zero percent opacity and no visible emissions. No visible emissions means an inspector viewing a source would see no visible emissions without the aid of instruments, while zero percent opacity indicates visible emissions which are not of a magnitude to record five percent opacity. Reference Method 9 specifies that 24 observations be taken at 15-second intervals and averaged over a six-minute period. The individual observations are recorded in 5 percent increments (0, 5, 10, etc.); however, averaging 24 observations may result in a six-minute average which is not a whole number. The six-minute average is to be rounded off to the nearest whole number following the standard rules of rounding (e.g. 0.49 would be rounded off to 0, 0.50 would be 1, 7.51 would be 8, etc.). This means that an affected facility subject to a zero percent opacity standard could have two of 24 observations at 5 percent opacity and the other 22 observations at 0 percent opacity and still be in compliance. The six-minute average in this case would be 0.42 percent and would be rounded off to 0 percent, the nearest whole number.

5.3.1 Truck Unloading Stations

Facility N

Facility N is a truck unloading station located at a port terminal elevator. The visible emission/opacity data from this facility are summarized in Table 5-1. A total of 54 six-minute opacity averages were taken which ranged from no visible emissions to 1 (0.83) percent opacity. The truck unloading operation was operating normally during the observation period. A total of 23 trucks of various designs and sizes unloaded wheat during this period.

Facility A

Facility A is a truck unloading station located at an inland terminal elevator. The visible emission/opacity data from this facility are summarized in Table 5-2. A total of 84 six-minute opacity averages were taken which ranged from no visible emissions to 0 (0.21) percent opacity. The truck unloading operation was operating normally during the observation period. A total of 51 trucks of various designs and sizes unloaded corn and soybeans during this period.

5.3.2 Railcar Unloading Stations

Facility C

Facility C is a railcar unloading station at a port terminal elevator. A total of 20 six-minute opacity averages were taken of boxcar unloading operations. All observations were no visible emissions. Table 5-3 summarizes the data obtained at this facility. A total of nine boxcars were observed during normal unloading operations. Wheat was being unloaded throughout the observation period.

Table 5-1

FACILITY N[3]

Summary of Visible Emission Data
for Truck Unloading

Date: September 25, 1975

Type of Facility: Truck Unloading

Type of Discharge: Fugitive

Distance from Observer to Discharge Point: 40 ft.

Location of Discharge: Shed Door 20' x 15'

Height of Observation Point: Ground Level

Height of Point of Discharge: 0' to 20'

Direction of Observer from Discharge Point: East

Description of Background: Sky and Trees

Description of Sky: Hazy to Blue

Wind Direction: North

Wind Velocity: 5-10 mi/hr

Color of Plume:

Detached Plume: None

Interference of Steam Plume: None

Duration of Observation: 9/25/75 - 210 minutes

Summary of Data:

Run	No. of 6-Minute Averages	No. of Averages at N-V-E	Range of Averages	Average Opacity (%)
1A	20	17	N-V-E to 1 (.83)	0 (0.07)
1B	15	13	N-V-E to 0 (.42)	0 (0.03)
1C	19	16	N-V-E to 0 (.21)	0 (0.01)

Table 5-2

FACILITY A^4

Summary of Visible Emission Data
for Truck Unloading

Date: September 29, 1975

Type of Facility: Truck Unloading

Type of Discharge: Fugitive

Distance from Observer to Discharge Point: 25 ft.

Location of Discharge: Shed Door 20' x 15'

Height of Observation Point: Ground Level

Height of Point of Discharge: 0' to 20'

Direction of Observer from Discharge Point: West

Description of Background: Grain Bin

Description of Sky: 25% - 75% cloudy

Wind Direction: Southeast

Wind Velocity: 0-10 mi/hr

Color of Plume:

Detached Plume: None

Interference of Steam Plume: None

Duration of Observation: 504 minutes

Summary of Data:

Run	No. of 6-Minute Averages	No. of Averages at N-V-E	Range of Averages	Average Opacity (%)
1A	27	24	N-V-E to 0 (.21)	0 (.008)
1B	24	22	N-V-E to 0 (.21)	0 (.009)
1C	33	28	N-V-E to 0 (.21)	0 (.006)

Table 5-3

FACILITY C[3]

Summary of Visible Emission Data
for Boxcar Unloading

Date: September 23, 1975

Type of Facility: Boxcar Unloading

Type of Discharge: Fugitive

Distance from Observer to Discharge Point: 20 ft.

Location of Discharge: Shed Door 20 ' x 15'

Height of Observation Point: Ground-Level

Height of Point of Discharge: 0' to 20'

Direction of Observer from Discharge Point: East and West

Description of Background: Building

Description of Sky: Overcast

Wind Direction: South-Southeast

Wind Velocity: 5-10 mi/hr

Color of Plume:

Detached Plume: None

Interference of Steam Plume: None

Duration of Observation: 120 minutes

Summary of Data:

Run	No. of 6-Minute Averages	Range of Averages
1A	10	All N-V-E
1B	10	All N-V-E

5.3.3 Barge and Ship Unloading Equipment

Facility D

Facility D is a barge unloading operation at a port terminal elevator. Table 5-4 summarizes the fugitive emission data collected at Facility D. Visible emissions ranged from 0 to 30 percent opacity. Wheat and corn were being unloaded and the unloading operations proceeded normally. These data were taken by an unqualified opacity reader.

Facility E

Facility E is a barge unloading operation at a port terminal elevator. Tables 5-5 and 5-6 summarize the fugitive emission data collected at Facility E. The six-minute opacity averages ranged from 5 (4.8) to 67 (66.9) percent. Individual opacity readings ranged from 0 to 100 percent. These data were taken by an unqualified opacity reader. Normal barge unloading operations were maintained while soybeans and corn were unloaded.

5.3.4 Grain Handling Operations

Facility O

Facility O is a headhouse and exterior conveyor system (grain handling operations) located at a port terminal elevator. Wheat was being unloaded, transferred, and cleaned within the headhouse during the 216 minutes of observations. A total of 36 six-minute opacity averages were taken; all were no visible emissions. Normal operation was maintained during the observation period. Table 5-7 summarizes the fugitive emission data collected at Facility O.

Table 5-4

FACILITY D[5]

Summary of Visible Emission Data
for Barge Unloading*

Date: October 17, 1972 and October 18, 1972

Type of Facility: Grain Elevator Barge Unloading

Type of Discharge: Fugitive

Distance from Observer to Discharge Point: 40'

Location of Discharge: Marine Leg & Barge

Height of Observation Point: 5'

Height of Point of Discharge: 15'

Direction of Observer from Discharge Point: N.A.

Description of Background: N.A.

Description of Sky: Clear

Wind Direction: N.A.

Wind Velocity: N.A.

Color of Plume: Brown

Detached Plume: No

Duration of Observation: At least four readings were made of fugitive emissions from the process every hour and visible emissions ranged from 0 to 30 percent opacity.

N. A. - Not Available

NOTE: DATA TAKEN BY UNQUALIFIED READER

*Taken during particulate emission tests of fabric filter.

Table 5-5

FACILITY E^6

Summary of Visible Emission Data for Barge Unloading*

Date: October 30, 1973

Type of Facility: Grain Elevator - Barge Unloading

Type of Discharge: Fugitive

Distance from Observer to Discharge Point: 300'

Location of Discharge: Marine Leg and Barge

Height of Observation Point: 10'

Height of Point of Discharge: 0

Direction of Observer from Discharge Point: North

Description of Background: Shipping Dock, Structural Concrete and Shadows

Description of Sky: Clear

Wind Direction: West

Wind Velocity: N.A.

Color of Plume: Brown

Detached Plume: No

Duration of Observation: Fourty-eight minutes.

SUMMARY OF SIX-MINUTE AVERAGE OPACITIES

	Time		Opacity	
Set Number	Start	End	Sum	Average
1	11:16	11:21	165	7 (6.9)
2	11:22	11:27	115	5 (4.8)
3	11:28	11:33	125	5 (5.2)
4	11:34	11:39	185	8 (7.7)
5	11:40	11:45	270	11 (11.2)
6	11:46	11:51	335	14.0
7	11:52	11:57	265	11.0
8	11:58	12:03	395	17 (16.5)

Filter became plugged and shut off at 12:03

Readings ranged from 0 to 20 percent opacity.

Sketch Showing How Opacity Varied With Time:

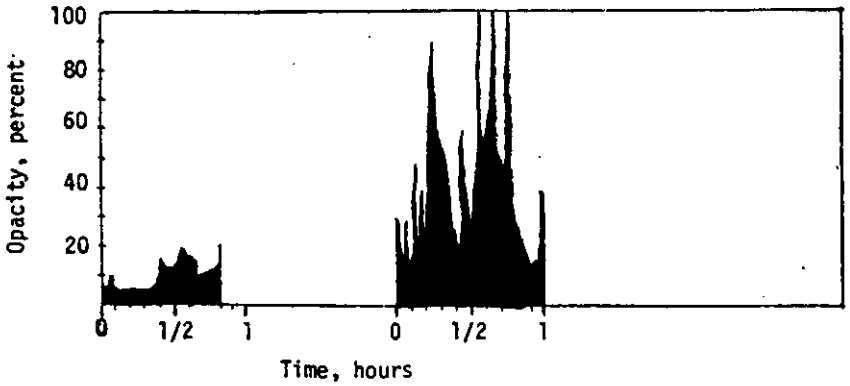

*Taken during particulate emission tests of fabric filter.

N.A. - Not Available

NOTE: DATA TAKEN BY UNQUALIFIED READER

Table 5-6

FACILITY E[6]

Summary of Visible Emission Data for Barge Unloading*

Date: October 31, 1973

Type of Facility: Grain Elevator - Barge Unloading

Type of Discharge: Fugitive

Distance from Observer to Discharge Point: 300'

Location of Discharge: Marine Leg and Barge

Height of Observation Point: 10'

Height of Point of Discharge: 0

Direction of Observer from Discharge Point: North

Description of Background: Shipping Dock, Structural Concrete and Shadows

Description of Sky: Partly Cloudy

Wind Direction: West

Wind Velocity: N.A.

Color of Plume: Brown

Detached Plume: No

Duration of Observation: Sixty minutes.

SUMMARY OF SIX-MINUTE AVERAGE OPACITIES

	Time		Opacity	
Set Number	Start	End	Sum	Average
1	10:29	10:34	545	23 (22.7)
2	10:35	10:40	725	30 (30.2)
3	10:41	10:46	1280	53 (53.3)
4	10:47	10:52	770	32 (32.1)
5	10:53	10:58	955	40 (39.8)
6	10:59	11:04	1605	67 (66.9)
7	11:05	11:10	1510	63 (62.9)
8	11:11	1:30	1580	66 (65.8)
9	1:31	1:36	405	17 (16.9)
10	1:37	1:42	500	21 (20.8)

Readings ranged from 10 to 100 percent opacity.

See Sketch Showing How Opacity Varied With Time in Table 5-5.

N.A. - Not Available

NOTE: DATA TAKEN BY UNQUALIFIED READER

*Taken during particulate emission tests of fabric filter.

Table 5-7

FACILITY O^3

Summary of Visible Emission Data
for Grain Handling

Date: September 23, 1975

Type of Facility: Grain Handling

Type of Discharge: Fugitive

Distance from Observer to Discharge Point: 300 ft.

Location of Discharge: Headhouse and Conveyor

Height of Observation Point: Ground Level

Height of Point of Discharge: 100'

Direction of Observer from Discharge Point: West

Description of Background: Blue Sky

Description of Sky: Clear

Wind Direction: South

Wind Velocity: 15-25 mi/hr

Color of Plume:

Detached Plume: None

Interference of Steam Plume: None

Duration of Observation: 216 minutes

Summary of Data:

Run	No. of 6-Minute Averages	Range of Averages
1A	18	All N-V-E
1B	18	All N-V-E

5.3.5 Truck Loading Stations

Facility P

Facility P is a soybean meal truck loading operation at a soybean processing plant. As explained in Chapter 4, there are no well controlled whole grain truck loading facilities presently in operation. EPA judged that soybean meal is as dusty as grain and is similar to grain; therefore, transfer of technology is possible in this situation. The data gathered at this facility were used to develop the proposed standard. A total of 30 six-minute opacity averages were taken during normal loading operations. Nine trucks were loaded with soybean meal during the observation period. The range of six-minute opacity averages was 1 (0.8) to 10 (10.4) percent. Table 5-8 summarizes the fugitive emission data obtained at this facility.

5.3.6 Railroad Boxcar Loading Stations

Facility Q

Facility Q is a railroad boxcar loading operation at an inland terminal elevator. This facility is the best controlled boxcar loading operation in the field. However, the facility could be better maintained and a higher ventilation rate could be used. Table 5-9 summarizes the data obtained at this facility. A total of 6 six-minute opacity averages were taken during normal loading operations. Four boxcars were loaded with barley during the observation period. The six-minute opacity averages ranged from 3 (2.5) to 5 (5.2) percent. The proposed standard is based on a transfer of technology from railroad hopper car loading as explained in Chapter 8.

Table 5-8

FACILITY P[7]

Summary of Visible Emission Data
for Truck Loading

Date: February 3, 1976

Type of Facility: Truck Loading

Type of Discharge: Fugitive

Distance from Observer to Discharge Point: 25 ft.

Location of Discharge: Shed Door 20' x 15'

Height of Observation Point: Ground Level

Height of Point of Discharge: 0' to 20'

Direction of Observer from Discharge Point: East and South

Description of Background: Grey Building

Description of Sky: Clear

Wind Direction: Across opening of shed

Wind Velocity: 5-10 mi/hr

Color of Plume:

Detached Plume: None

Interference of Steam Plume: None

Duration of Observation: 180 minutes

Summary of Data:

Run	No. of 6-Minute Averages	Range of Averages	Average Opacity (%)
1A	16	1 (0.8) to 7 (6.9)	3 (3.1)
1B	14	2 (1.9) to 10 (10.4)	5 (5.3)

Table 5-9

FACILITY Q7

Summary of Visible Emission Data
for Boxcar Loading

Date: February 4, 1976

Type of Facility: Boxcar Loading

Type of Discharge: Fugitive

Distance from Observer to Discharge Point: 25 ft.

Location of Discharge: Shed Door 20' x 15'

Height of Observation Point: Ground Level

Height of Point of Discharge: 0' to 20'

Direction of Observer from Discharge Point: West

Description of Background: Building

Description of Sky: Clear

Wind Direction: North

Wind Velocity: 0-5 mi/hr

Color of Plume: Tan

Detached Plume: None

Interference of Steam Plume: None

Duration of Observation: 36 minutes

Summary of Data:

Run	No. of 6-Minute Averages	Range of Averages	Average Opacity (%)
1A	3	3 (2.9) to 5 (5.2)	4 (3.8)
1B	3	3 (2.5) to 5 (4.8)	4 (3.6)

5.3.7 Railroad Hopper Car Loading Stations

Facility R

Facility R is a railroad hopper car loading station at an inland terminal elevator. A total of 24 six-minute opacity averages were taken during normal loading operations of corn into seven hopper cars. The range of six-minute averages was no visible emissions to zero percent opacity. Note: There was no wind throughout the observation period. This was considered abnormal and was taken into account in developing the proposed standard. Table 5-10 summarizes the fugitive visible emission data from Facility R.

5.3.8 Barge and Ship Loading Stations

Facility J

Facility J is a ship loading station at a port terminal elevator. A total of 67 six-minute opacity averages were taken during the loading of wheat into two ships. Of the 67 six-minute averages, 18 were during the "topping off" operation and 49 were during the general loading operation. Load-out proceeded normally for the duration of the observation period. Table 5-11 summarizes the fugitive visible emission data gathered at Facility J.

5.3.9 Grain Dryers

Facility S

Facility S is a 2500 bushel/hr cylindrically shaped column grain dryer located at a country elevator. The perforation plate diameters were a series of sizes from top to bottom; .078 inch, .0625 inch and .056 inch. A total of 18 six-minute opacity averages were taken at this facility. Four of the six-minute averages

Table 5-10

FACILITY R^8

Summary of Visible Emission Data
for Hopper Car Loading

Date: February 24, 1976

Type of Facility: Hopper Car Loading

Type of Discharge: Fugitive

Distance from Observer to Discharge Point: 25 ft.

Location of Discharge: Shed Door 20 ' x 15'

Height of Observation Point: Ground Level

Height of Point of Discharge: 0' to 20'

Direction of Observer from Discharge Point: East

Description of Background: Building

Description of Sky: Clear

Wind Direction: Calm

Wind Velocity: 0 mi/hr

Color of Plume:

Detached Plume: None

Interference of Steam Plume: None

Duration of Observation: 144 minutes

Summary of Data:

Run	No. of 6-Minute Averages	No. of Averages at N-V-E	Range of Averages
1A	12	10	N-V-E to 0
1B	12	11	N-V-E to 0

Table 5-11

FACILITY J[3]

Summary of Visible Emission Data
for Ship Loading

Date: September 23 and 24, 1975

Type of Facility: Ship Loading

Type of Discharge: Fugitive

Distance from Observer to Discharge Point: 15 ft.

Location of Discharge: Ship Hold

Height of Observation Point: Deck Level

Height of Point of Discharge:

Direction of Observer from Discharge Point: Southeast to West

Description of Background: Ship Hold

Description of Sky: Overcast

Wind Direction: South-Southeast

Wind Velocity: 10-25 mi/hr

Color of Plume:

Detached Plume: None

Interference of Steam Plume: None

Duration of Observation: 402 minutes

Summary of Data:

	Run	No. of 6-Minute Averages	No. of Averages at N-V-E	Range of Averages	Average Opacity (%)
Topping-Off	1A	9	0	1 (.59) to 13 (12.9)	5.0
	1B	9	1	N-V-E to 17 (17.3)	6 (6.4)
General	2A	24	8	N-V-E to 8 (7.5)	3 (3.3)
	2B	25	5	N-V-E to 9 (8.5)	4 (3.5)

are above the proposed standard; however, these averages were deemed invalid due to steam interference. Excluding these four averages, the range of the 14 six-minute opacity averages is zero to 0 (0.46) percent opacity. Table 5-12 summarizes the data obtained at this facility. Normal operation of the dryer was maintained during the observation period. Corn was being dried at the actual operating rate of 2200 bushel/hr.

Facility T

Facility T is a 3500 bushel/hr cylindrically shaped column grain dryer located at a country elevator. The perforation plate diameters were of two different sizes. The top half has diameters of .0625 inch and the lower half has diameters of .050 inch. A total of 40 six-minute opacity averages were taken at Facility T. The range of averages is no visible emissions to 1 (0.83) percent opacity. Corn was being dried and normal operation was maintained during the observation period. Table 5-13 summarizes the visible emission data collected at this facility.

Facility U

Facility U is a column grain dryer rated at 4000 bushels/hr. It is rectangular in shape and exhausts through one side of the structure. The perforation plate diameters are .084 inch and are uniform over the height of the column. A total of 39 six-minute opacity averages, all zero percent opacity, were taken at this facility. Normal operation was maintained while corn was being dried. Table 5-14 summarizes the visible emission data from this facility.

Table 5-12

FACILITY S^9

Summary of Visible Emission Data
for Column Dryer

Date: October 15, 1975

Type of Facility: Column Dryer

Type of Discharge: Fugitive

Distance from Observer to Discharge Point: 80 ft.

Location of Discharge: Dryer (Cylinder)

Height of Observation Point: 5'

Height of Point of Discharge: 5' to 40+

Direction of Observer from Discharge Point: East

Description of Background: Sky

Description of Sky: Overcast

Wind Direction: West

Wind Velocity: 5-10 mi/hr

Color of Plume: White

Detached Plume: 20'

Interference of Steam Plume: Yes

Duration of Observation: 108 minutes

Summary of Data:

Run	No. of 6-Minute Averages	Range of Averages	Average Opacity (%)
1A	6	0 to 0 (.42)	0 (0.18)
1B	8	0 to 0 (.46)	0 (0.17)

Table 5-13

FACILITY T[9]

Summary of Visible Emission Data
for Column Dryer

Date: October 15, 1975

Type of Facility: Column Dryer

Type of Discharge: Fugitive

Distance from Observer to Discharge Point: 100 ft.

Location of Discharge: Dryer (Cylinder)

Height of Observation Point: Ground Level

Height of Point of Discharge: 4' to 70'

Direction of Observer from Discharge Point: Southeast

Description of Background: Blue Sky

Description of Sky: Clear

Wind Direction: West

Wind Velocity: 10-15 mi/hr

Color of Plume:

Detached Plume: None

Interference of Steam Plume: None

Duration of Observation: 240 minutes

Summary of Data:

Run	No. of 6-Minute Averages	No. of Averages at N-V-E	Range of Averages	Average Opacity (%)
1A	20	5	N-V-E to 1 (.83)	0 (0.07)
1B	20	0	0 to 1.0	0 (0.07)

Table 5-14

FACILITY U[9]

Summary of Visible Emission Data
for Column Dryer

Date: October 16, 1975

Type of Facility: Column Dryer

Type of Discharge: Fugitive

Distance from Observer to Discharge Point: 60 ft.

Location of Discharge: Dryer (Side)

Height of Observation Point: Ground Level

Height of Point of Discharge: 20' to 60'

Direction of Observer from Discharge Point: East

Description of Background: Blue Sky

Description of Sky: Clear

Wind Direction: West

Wind Velocity: 0-5 mi/hr

Color of Plume:

Detached Plume:

Interference of Steam Plume:

Duration of Observation: 234 minutes

Summary of Data:

Run	No. of 6-Minute Averages	Range of Averages
1A	20	All 0
1B	19	All 0

Facility V

Facility V is a 1000 bushel/hr column grain dryer. It is similar in design to Facility U and has the same size perforation diameters. A total of 28 six-minute opacity averages were taken at this facility and all were zero percent opacity. Corn was being dried during the observation period and normal drying operation was maintained. Table 5-15 summarizes the visible emission data from this facility.

Facility W

Facility W is a rack grain dryer located at a country elevator. No air pollution control devices are used on this grain dryer. A total of 6 six-minute opacity averages were obtained. The range of opacity averages is 7 (7.1) to 13 (12.9) percent. Normal operation was maintained while corn was being dried. Table 5-16 summarizes the visible emission data collected at this facility.

Facility X

Facility X is a 2500 bushel/hr rack grain dryer located at a soybean processing plant. This dryer was equipped with a 50 mesh vacuum-cleaned screen filter through which all exhaust gases exited. A total of 5 six-minute opacity averages were obtained. All observations, a total of 120 taken at 15-second intervals, were no visible emissions except for one reading of 0% opacity. Normal drying operation was maintained while soybeans were being dried. Table 5-17 summarizes the visible emission data from this facility. The wind velocity and direction were not recorded because the observer was located between two tall structures. This would negate any effects from wind interference.

Table 5-15

FACILITY V^9

Summary of Visible Emission Data
for Column Dryer

Date: October 16, 1975

Type of Facility: Column Dryer

Type of Discharge: Fugitive

Distance from Observer to Discharge Point: 75 ft.

Location of Discharge: Dryer (Side)

Height of Observation Point: 5'

Height of Point of Discharge: 10' to 30'

Direction of Observer from Discharge Point: NE

Description of Background: Building

Description of Sky: Clear

Wind Direction: West

Wind Velocity: 0-5 mi/hr

Color of Plume:

Detached Plume:

Interference of Steam Plume: None

Duration of Observation: 168 minutes

Summary of Data:

Run	No. of 6-Minute Averages	Range of Averages
1A	14	All 0
1B	14	All 0

Table 5-16

FACILITY W9

Summary of Visible Emission Data
for Rack Dryer

Date: October 16, 1975

Type of Facility: Rack Dryer

Type of Discharge: Fugitive

Distance from Observer to Discharge Point: 20 ft.

Location of Discharge: Dryer (Side)

Height of Observation Point: Ground Level

Height of Point of Discharge: 10' to 50'

Direction of Observer from Discharge Point: North

Description of Background: Blue Sky

Description of Sky: Clear

Wind Direction: North

Wind Velocity: 5-12 mi/hr

Color of Plume:

Detached Plume:

Interference of Steam Plume:

Duration of Observation: 48 minutes

Summary of Data:

Run	No. of 6-Minute Averages	Range of Averages	Average Opacity (%)
1A	6	7 (7.1) to 13 (12.9)	10 (10.1)

Table 5-17

FACILITY X^{11}

Summary of Visible Emission Data
for Rack Dryer

Date: August 25, 1976

Type of Facility: Rack Dryer

Type of Discharge: Fugitive (50 mesh screen)

Distance from Observer to Discharge Point: 20 ft.

Location of Discharge: Dryer (Side)

Height of Observation Point: Ground-Level

Height of Point of Discharge: 0' to 10'

Direction of Observer from Discharge Point: North

Description of Background: Adjacent Building Wall

Description of Sky: Partly Cloudy

Wind Direction: Not Recorded

Wind Velocity: Not Recorded

Color of Plume: None

Detached Plume:

Interference of Steam Plume: No

Duration of Observation: 31 minutes

Summary of Data:

Run	No. of 6-Minute Averages	No. of Averages at N-V-E	Range of Averages
1A	5	4	N-V-E to 0

The data recorded in Table 5-18 were taken within 30 minutes of these data and there was no exterior wind at that time.

Facility Y

Facility Y is a 2500 bushel/hr column grain dryer located at a soybean processing plant. It is rectangular in design and has perforation plate hole diameters of .08 inch. Soybeans were being dried during the observation period and normal drying operation was maintained. A total of 5 six-minute opacity averages were taken at this facility and all readings were no visible emissions. Table 5-18 summarizes the visible emission data collected at this facility.

5.3.10 Air Pollution Control Devices

Facility A

Facility A is a truck unloading station, equipped with fabric filter control, at an inland terminal elevator. The exhaust from the fabric filter was observed during normal unloading operations. Corn and soybeans were being unloaded. A total of 56 six-minute opacity averages, all no visible emissions, were taken at this facility. A summary of the visible emission data from this facility is found in Table 5-19.

Facility B

Facility B is a truck unloading station, equipped with fabric filter control, at a soybean processing plant. Obviously, soybeans were being unloaded during the observation period of the fabric filter exhaust. A total of 21 trucks were unloaded during the observation period and normal operations were maintained. Forty six-minute opacity averages were taken and all were no visible emissions. Table 5-20 summarizes the visible emission data taken at this facility.

Table 5-18

FACILITY Y[11]

Summary of Visible Emission Data
for Column Dryer

Date: August 25, 1976

Type of Facility: Column Dryer

Type of Discharge: Fugitive

Discharge from Observer to Discharge Point: 50 ft.

Location of Discharge: Dryer (Side)

Height of Observation Point: Ground-Level

Height of Point of Discharge: 25' to 60'

Description of Background: Column Dryer Wall

Direction of Observer from Discharge Point: NE

Description of Sky: Partly Cloudy

Wind Direction: Calm

Wind Velocity: 0 mi/hr

Color of Plume: None

Detached Plume:

Interference of Plume: No

Duration of Observation: 31 minutes

Summary of Data:

Run	No. of 6-Minute Averages	Range of Averages
1A	5	All N-V-E

Table 5-19

FACILITY A[4]

Summary of Visible Emission Data
for Fabric Filter

Date: September 29, 1975

Type of Facility: Fabric Filter (Truck Unloading)

Type of Discharge: Stack

Distance from Observer to Discharge Point: 100 ft.

Location of Discharge: On Roof

Height of Observation Point: Ground Level

Height of Point of Discharge: 20'

Direction of Observer from Discharge Point: SE

Description of Background: Sky & Green Duct

Description of Sky: Partly Cloudy/Sunny

Wind Direction: South

Wind Velocity: 10-15 mi/hr

Color of Plume:

Detached Plume: None

Interference of Steam Plume: None

Duration of Observation: 336 minutes

Summary of Data:

Run	No. of 6-Minute Averages	Range of Averages
1A	28	All N-V-E
1B	28	All N-V-E

Table 5-20

FACILITY B[10]

Summary of Visible Emission Data
for Fabric Filter

Date: November 21, 1975

Type of Facility: Fabric Filter (Truck Unloading)

Type of Discharge: Stack

Distance from Observer to Discharge Point: 20 ft.

Location of Discharge: Side of Building

Height of Observation Point: Ground Level

Height of Point of Discharge:

Direction of Observer from Discharge Point: East

Description of Background: Dark Wall

Description of Sky: Overcast

Wind Direction: North

Wind Velocity: 15-35 mi/hr

Color of Plume:

Detached Plume: None

Interference of Steam Plume: None

Duration of Observation:

Summary of Data:

Run	No. of 6-Minute Averages	Range of Averages
1A	20	All N-V-E
1B	20	All N-V-E

REFERENCES

1. Ward, Thomas, "Emission Test Report," EMB Test No. 73-GRN-4, the test was conducted in April 1973.

2. Gerstle, Richard and DeWees, William, "Emission Test Report," EMB Test No. 74-GRN-9, prepared for EPA by PEDCo Environmental, Contract No. 68-02-0237, Task 29, the test was conducted November 1973.

3. Swanson, Neil R., "Trip Report - Cargill Incorporated; Continental Grain Company," observations conducted September 22-25, 1975.

4. Swanson, Neil R., "Trip Report - Cargill, Inc.; Pillsbury Co.," observations conducted September 29-30, 1975.

5. Ward, Thomas, "Emission Test Report" for Facility D, EPA Test No. 73-GRN-2, prepared for EPA by York Research Corporation, November 1972.

6. Pfaff, Roger O., "Emission Test Report" for Facility E, EPA Test No. 74-GRN-7, January 1974.

7. Roy, Sims L., Jr., "Report of Trip to Obtain Opacity Readings at Truck Loading Operation in Des Moines, Iowa, and Boxcar Loading Operation in Minneapolis, Minnesota, on February 2-4, 1976.

8. Swanson, Neil R., "Trip Report: Cargill, Inc., Denver - Railroad Hopper Car Loading Operation," observations conducted February 24, 1976.

9. Swanson, Neil R., "Trip Report - Grain Dryer Facilities in Illinois," observations conducted October 14-16, 1975.

10. Swanson, Neil R., "Trip Report - Cargill Inc., Fayetteville, N.C.," observations conducted November 21, 1975.

11. Swanson, Neil R., "Trip Report - Cargill Inc., Fayetteville, N.C.," grain dryer observations conducted August 25, 1976.

6. ECONOMIC IMPACT

6.1 CHARACTERIZATION OF THE INDUSTRY

6.1.1 Introduction

The primary functions of the grain elevator industry are to store, handle, and merchandise grain. In addition to transshipment, the handling function includes grading, cleaning, blending, and drying. Grain is harvested only during short periods within the year, but marketing and consumption is a continuous process. The implication of this is that some grain elevators engage primarily in grain movement from the farm to the market; other elevators engage primarily in storage. The emphasis of the development of the standards is on the handling and distribution of grain.

In this section, information is provided on the character of the firms engaged in the industry, the size and distribution of elevators, grain prices, the price mechanism, and trends. The industry analysis in this chapter is divided into two categories: (1) firms who handle and move grain as their primary business (grain elevators), and (2) grain processors with handling and storage facilities.

6.1.2 Grain Elevators

6.1.2.1 Firm Characteristics

In terms of ownership concentration, the grain elevator industry is characterized by many single plant firms. This is prevalent especially among country elevators (see Table 6-1). Some 64 percent of the elevators in existence during 1967 were owned by firms with a single, or perhaps two, elevators. These same elevators were responsible for handling about 71 percent of the grain in terms of sales value. These firms also

Table 6-1. CONCENTRATION OF OWNERSHIP OF COUNTRY ELEVATORS
Single and Multi-Unit Firms - 1967

Firms with	# of firms	# of elevators	% of total elevators	Sales value ($1,000)	% of sales value
1-2 Elevators	4,033	4,160	64.2	$3,985,180	71.3
3-5 Elevators	234	597	9.2	485,002	8.7
6-25 Elevators	118	751	11.6	525,840	9.4
26 Elevators or more	24	969	15.0	594,686	10.6
Total	4,409	6,477	100.0	$5,590,708	100.0

Source: U. S. Department of Commerce, U. S. Census of Business, 1967.

traditionally hire relatively few people. Of the grain elevator businesses included in SIC5053, 35-38 percent had 1-3 employees; 33-34 percent had 4-7 employees; 22-24 percent had 8-19 employees; and 5-6 percent had 20-49 employees.[1] These employment statistics and the low concentration in ownership are indicative of small businesses.

The low concentration of ownership engenders strong competition in the industry. Most farmers in the primary grain production areas traditionally have been within a short distance from several elevators owned by different firms. Many elevators were constructed during a time when farmers used obsolete forms of transportation, which dictated that these elevators be built at a short distance from the farm. Now, farmers have larger and more efficient conveyances to move grain to the elevators with the consequence that competition is stronger among elevators.

Elevator operators are sensitive to cost increases that amount to only a fraction of a cent per bushel handled. This observation is an important consideration in the impact analysis of air pollution controls in Section 6.3.

The four basic types of grain elevator operators are: (1) grain exporters, (2) food processors and feed manufacturers, (3) farm cooperatives, and (4) independents. Grain exporters who are merchandisers of grain for retailing in world markets are generally associated with ownership of inland and port terminals. Their motivation in this regard has been control of grain procurement and quality. Food processors, unlike exporters, are not merchandizers. Rather, they require elevators for the purpose of control of inventory and quality needs for processing. Both exporters

and food processors have ample capital availability, good management, and generally little difficulty in passing forward increased costs.

Farmer cooperatives are important in grain marketing in those areas remote from the consumer markets or port terminals. These cooperatives, owned by farmer members/shareholders, provide storing, handling, and merchandising services for the farmers. Cooperatives, not only individually are becoming larger organizations, but also are increasing their ownership of country and terminals elevators. In 1963, cooperatives owned 38 percent of the country elevators and 20 percent of terminals. By 1980, they are expected to own 60 percent of the country elevators and 25 percent of the terminals. This growth pattern is occurring at the expense of the independents, who are very small businesses. The latter generally find difficulty in acquiring capital and frequently are reluctant or unable to modernize their facilities.

The significance of the growing importance of farm cooperatives is the one factor responsible for the anticipated trends in elevator construction. These organizations will be making important decisions in modernizing elevators to take advantage of changes in transportation modes and costs, namely multiple-car train discounts. The cooperatives will be upgrading elevators where unit-train service can be provided, shutting down elevators where rail service will be discontinued, and trucking grain to modernized plants.

The impact of this trend will be attrition of small or uneconomical country elevators clustered in areas where short distances separate them.

Increased costs, as a result of pollution control on necessary modernizations, may force the closure or preclude operation of such elevators.

6.1.2.2 Plant Size and Distribution

The Department of Agriculture lists the number and size of grain warehouses, which have signed contracts under the Uniform Grain Storage Agreement for permission to store government-owned grain.[2] These data indicate that some 6700 country warehouses (country elevators) with an average storage capacity of 447,000 bushels were operative in 1974; and some 450 terminals, had an average storage capacity of 3,800,000 bushels.

A size distribution of elevators for 12 North Central States[3] shows that 42 percent of country elevators had less than 100,000 bushel storage capacity; 64 percent less than 200,000 bushel storage; and 84 percent less than 400,000 bushel storage capacity. Furthermore, 16 percent of the elevators with greater than 400,000 bushel storage capacity accounted for 54 percent of aggregated storage capacity.

6.1.2.3 Demand for U. S. Grain

The 1950's and the early 1960's were characterized by surplus production of grain with large stockpiling of surplus grain stocks. As shown in Table 6-2, a long-term trend toward balance between supply and demand has occurred since 1961. This is reflected in the gradual decline of carry-in stocks. A surge in foreign demand during the 1970's has been an important factor in this trend.

A gradual increase in foreign and domestic consumption is expected through 1981. These data indicate that there will be very little demand for new storage capacity. This is shown by the projected 2,312 million

Table 6-2. DOMESTIC CONSUMPTION, EXPORTS, PRODUCTION, AND CARRY-IN STOCKS OF MAJOR U.S. GRAINS[a]

Crop Year	Domestic Consumption	Exports	Production	Carry-In Stocks
		- million bushels -		
1960-61	6,392	1,357	8,173	4,222
1961-62	6,526	1,593	7,538	4,691
1962-63	6,407	1,550	7,505	4,144
1963-64	6,277	1,837	7,994	3,723
1964-65	6,256	1,825	7,392	3,636
1965-66	6,902	2,293	8,440	2,975
1966-67	6,873	1,935	8,484	2,268
1967-68	6,919	2,008	9,398	2,021
1968-69	7,301	1,632	9,432	2,609
1969-70	7,745	1,936	9,639	3,194
1970-71	7,692	2,047	8,891	3,166
1971-72	8,094	2,183	10,895	2,341
1972-73	8,296	3,354	10,531	3,003
1973-74	8,243	3,452	11,190	1,916
1974-75	8,658[b]	3,005[b]	9,521	1,363
1980-81	9,555[c]	3,200[c]	12,755[c]	2,312[c]

[a] Wheat, corn, soybeans, grain sorghum, oats, barley, rye, rice.

[b] USDA Estimates.

[c] Arthur D. Little, Inc. Estimates.

Source: U. S. Department of Agriculture and Arthur D. Little, Inc. Estimates

bushel estimate for carry-in stocks.[4] Production increase from 9,521 million bushels in 1974-75 to some 12,753 million bushels in 1981 indicates that the grain handling industry will need to continue handling large quantities of grain.

The level of on-farm storage capacity directly affects the demand for commercial elevator storage. On-farm storage capacity is unknown; however, the Department of Agricultural Statistical Reporting Service indicates a growing trend of on-farm storage of grain.[5]

6.1.2.4 Prices and Price Setting

Grain prices which are the basis for setting cash and future contracts are posted daily for the major commodity markets (Chicago, Minneapolis, and Kansas City), where the greatest bulk of grain traffic converges at large terminal facilities. These prices are what exporters and processors pay to grain merchants in these terminal market cities. To these prices are added such costs as ocean freight, insurance, additional storage fees, and handling costs that are incidental to the exporters and processors.

The cash (market) price, exclusive of incidental charges, paid by an exporter or processor at the terminal is then shared with the farmer, country elevator and terminal operators, and shippers (railroads or other transportation companies). Each elevator operator subtracts from the price paid by a terminal or port, his shipping costs of forward delivery to the terminal or port, his own costs of storing and handling, and his operating margin before he presents a negotiable price to the farmer or merchandiser closer to the production area. The farmer either

accepts this price on any given day or waits a few days or weeks for a better price. In any event, the farmer competing with many grain producers of a perishable commodity must be a price taker.

Although grain prices fluctuate continuously, grain elevators protect their cost structure and profit margin by offsetting any cash purchase with a forward sale in the future markets. Cash and future prices move together in tandem, which enable elevator operators to handle the risk of fluctuating market prices.

Any elevator operator, of course, is affected by competing elevator operators, with regard to his own and his competitors costs, and transportation differences. All elevator operators compete in acceptance of the terminal market price established in the major commodity centers. Any cost increases incidental to an individual elevator are included in his cost structure and are reflected in a lower negotiation price to the farmer.

The farmer has the choice of accepting, waiting out for a higher market price, or selling to a competitive elevator. The outcome for this elevator operator depends on the presence of proximate elevators. If the farmer does not absorb these cost increases which are reflected in a lower price for his product, the elevator operator has to absorb these costs from his profit margin. In summary, this is the price determination mechanism used in analyzing the impact of incremental control costs incurred with the establishing of new source performance standards.

In the economic analysis of elevators, grain prices are assumed to have no influence on establishing profit margins and handling increased control costs. As mentioned earlier with regard to hedging via futures,

the market prices of grain are not important in determining revenues to the operation. The elevator operator negotiates a price on a cents-per-bushel basis, which takes into account a margin for his expenses and some profits. Although this supposition gives the impression of a constant operating margin on a cents-per-bushel basis, the elevator operator still is subject to volume changes in his total operation because of fixed costs for depreciation, interests, taxes, and so forth.

Another area where grain prices would be important is in the inventory valuation on balance sheets. Again consistent with the discussion above, total fixed assets in the discussion on capital availability for pollution controls excludes the value of grain inventories.

6.1.2.5 Determinants of New Construction

The most important factors of change occurring within the grain handling industry have come from the transportation industry. Lower railroad rates for multi-car units and abandonment of railroad branch lines are forcing the grain handling industry to shut down inefficient elevators and modernize existing elevators on viable rail lines.

In order to increase their competitiveness, railroads began to offer discount rates in 1970 for shipping in units of up to 100 cars. These unit-trains, so the railroad industry thought, were to capture the efficiencies of faster turnaround times and to reduce delays in loading, switching, and unloading cars. Furthermore, the railroad industry encouraged the use of jumbo hopper cars rather than the boxcars for the transport of grain. A jumbo hopper car can haul 3500 bushels of grain as opposed to 2000 bushels for the typical 40-foot box car.

The savings in multi-car train rates over single car rates varies according to the distance between gathering and final unloading points, the size of train, and usage requirements set forth by the particular railroad company. On the latter score, some grain shippers would have to guarantee the use of the train for 5 or more consecutive trips; on the other hand, a shipper may request a multi-car train on an occasional basis.

To this point in time, the availability of multi-car rates has been mostly in areas serving corn and soybean production. However, some of the major grain exporters believe that similar rates will eventually be offered by the railroad companies in the wheat production areas.[6]

The impact of the changes in the transportation system upon the grain elevator industry plus the increased demand for grain will produce some significant changes for the grain elevator industry. New distribution systems will be created. These will include the construction of small grain gathering inland terminals in the production areas shipping to new port terminals. These small inland terminals will either be brand new types of terminals which specialize in high volume grain handling with minimum storage or modernized country elevators rebuilt with greater leg capacity and some increased storage.

In addition, distribution systems presently serving existing port terminals are expected to be overhauled to accommodate transportation savings and handle greater output. In many remote areas, grain elevators may be abandoned because of the loss of railroad branch lines. In these areas, grain will have to be hauled to terminals by large trucks (diesel tractor-

trailer). As far as new country elevators, few are expected to be built. However, in some cases some new elevators may have to be built to replace facilities destroyed by fire, explosion, or some similar catastrophe.

Estimates of new and reconstructed elevators have been made which reflect these trends as just discussed. Table 6-3 shows the estimated number of elevators in 1974 and in 1980.[7] The trends in the table show emphasis on the construction of high throughput elevators, those having fast loading capability to accommodate multi-car trains. The critical assumptions underlying these estimates are as follows:

(1) the level of U. S. grain exports will fluctuate moderately around 3.2 billion bushels per year.

(2) multi-car railroad rate discounts will be offered for all major grain producing areas in the United States.

(3) some 70 percent of the grain shipped for export will be handled by high throughput terminals because the greatest transportation savings appears to be in the long-haul, 100 car unit-trains.

(4) only about 20 percent of the grain shipped for domestic consumption will be handled by high throughput elevators.

(5) by 1980, a significant number of branch rail lines will be abandoned, thereby interrupting rail service for many country elevators and resulting in some shut-downs (an attrition rate of about 3.5 percent for traditional country elevators and 2.5 percent for traditional inland terminals).

Table 6-3. ESTIMATED CHANGE IN THE U.S. GRAIN ELEVATOR INDUSTRY STRUCTURE, 1975-1981 WITHOUT NEW SOURCE PERFORMANCE STANDARDS

Type elevator	Estimated number of elevators		
	1974	1980	Change
Traditional country	6480	4635	-1845
Upgraded country (25 car)	90	305	+215
Upgraded country (50 - 100 car)	60	200	+140
High throughput terminals	45	150	+105
Traditional inland terminals	390	335	-26
Traditional port terminals	65	70	+5
Totals	7130	5695	-1406

A significant portion of the grain, particularly corn, handled by elevators is dried artificially. Most artificial drying of corn takes place at the farm or at the first recipient elevator. However, occasionally some "wet" grain is shipped to terminals where it is dried, particularly during peak harvest when country elevators may be operating at their dryer capacity.

The estimates for new dryers are based on the following assumptions:

(1) most of the growth in dryer capacity has already occurred up to this point in time.

(2) no new breakthrough in grain drying technology will occur through 1980.

(3) a replacement rate of about 5 percent annually of the current dryer capacity will be used (based on average life of 20 years).

The estimates of new elevator and dryer construction are shown in Table 6-11, Section 6.3.2.

6.1.3 Grain Processors

6.1.3.1 Introduction

In the previous section, the linkage of food processors to ownership of elevators was briefly touched upon. These processors have grain handling facilities primarily for receiving and storage of grain intended for their own mill needs. There are basically five types of food processors of interest here:

(1) wheat mills who produce wheat flour

(2) dry corn mills who produce corn flour

(3) rice mills who clean and dehull rice and produce whole grain rice

(4) wet corn mills who produce primarily corn starch

(5) soybean processors who produce soybean meal as a major ingredient for animal feed and soybean oil.

The discussion on grain prices and pricing in Section 6.1.2 would have some application here. Grain processors generally buy grain on the basis of world market prices in the same manner as exporters. In terms of managing increased costs for pollution control, these firms would be expected to attempt to pass forward some or all of these cost increases to consumers of the products--to the extent allowed by competing processors.

Grain prices assumed for the various model plants in calculating sales revenues and impact of controls are as stated in Table 6-4.[8] These grain prices are assumed to be the average prices for the 1975-1980 period.

Table 6-4. GRAIN PRICES USED IN MODEL PLANT ANALYSIS

Grain	Price, $ per bushel
Soybeans	5.40
Wheat	3.45
Corn	2.40
Rice	4.73

This section explores the industry characteristics, plant size, consumer demand for products, and growth potential for each grain processor type.

6.1.3.2 Soybean Processors

The soybean processing industry is characterized as having a trend toward fewer plants, yet larger output and employment as a whole. From 1963 to 1972, the number of plants has declined from 102 to 94, employment has increased from 6500 to 9000 employees (salaried and waged), and value added (which does not reflect grain price) has increased from $152 million to $346 million.[9]

With regard to size profile, most of the production appears to be concentrated in plants generating about $30 million in sales revenues. Table 6-5 shows the size profile of plants in terms of employees and value of shipments for 1967.

Table 6-5 . SIZE PROFILE OF SOYBEAN MILLING PLANTS

Establishment size, 1967 employees	Number of establishments	Approximate number of employees, by sector	Value of shipments, million dollars
1 - 4	13	< 50	3.0
5 - 9	5	< 50	3.2
10 - 19	6	100	27.7
20 - 49	24	900	346.5
50 - 99	31	2200	753.1
100 - 249	16	2200	611.5
250 - 499	6	2700	403.4
> 500	1	N.A.	N.A.
TOTAL	102	8000	2148.3

Source: Census of Manufactures, 1967

Of all the grains discussed in this section, soybeans appears to be the most likely grain to have well-defined growth. Increasing world demand for protein sources will require use of soybeans both for production of animal foods and meat substitutes in food products for human consumption. Its increasing importance as a food source will displace some of the markets for flour (wheat and corn) products.

Strong incentives exist for the soybean industry to invest in new storage and handling capacity. In recent years, soybeans have cost at harvest time about one-third of their peak off-season price. Despite the opportunities available in the futures markets, there appears ample

opportunity for materials cost saving by buying and storing large stocks at harvest time. Industry experts feel that over the next five years, two additional large soybean plants will be built annually, with ten additions per year to existing plants.

6.1.3.3 Flour Mills

Wheat and dry corn mills are lumped together, in this section, because in many instances the same plants process both grains. The end product is basically the same, flour.

The flour milling industry is characterized as having little growth, consolidation of production into fewer plants, and attrition of the smaller plants. Total number of plants have declined from 618 in 1963 to 450 in 1972. Value added has increased from $373 million in 1963 to $509 million in 1972 with a virtual standstill from 1967 to 1972.[10]

Table 6-6 shows the size profile of plants by value of shipments and employees. Demand for flour products is expected to remain unchanged over the next few years. There appears to be ample capacity in milling which will preclude any new construction. Furthermore, little incentive exists to add storage capacity for the purpose of holding grains for speculative purposes. As a result, no capacity additions are expected through 1981.

Table 6-6. SIZE PROFILE OF DRY CORN AND WHEAT MILLING PLANTS[a]

Establishment size, 1967 employees	Number of establishments	Approximate number of employees, by sector	Value of shipments, million dollars
1 - 4	210	300	18
5 - 9	62	400	24.5
10 - 19	56	800	48.6
20 - 49	84	2700	313.2
50 - 99	74	5300	720.8
100 - 249	44	6700	849.5
250 - 499	9	4300	479.9
> 500	2	N.A.	N.A.
TOTAL	541	20,500	2454.6

[a]includes all flour milling except rice.

Source: Census of Manufactures, 1967

6.1.3.4 Wet Corn Milling

The wet corn milling industry is composed of seventeen very large plants. These plants are characterized as having large fixed assets, from $15 million to $115 million. Over the past ten years, four new plants have come on-stream (two small plants have closed).

Wet corn mills produce corn starch, sugar, corn oil, gluten, animal feed, and related products. Starch is also made from potatoes and wheat, as well as corn. However, corn starch is felt to be the major component of starch production.

Very little growth is expected for the industry over the next few years. Ample processing capacity exists for the short-term (up to five years). Demand for products is expected to increase slowly and steadily. Furthermore, wet corn millers don't appear to have any problems in acquiring raw corn. Their production needs only constitute about 10 percent of all American corn production. This would seem to preclude any need for additional storage at existing plants.

6.1.3.5 Rice Mills and Commercial Rice Dryers

At least 90 percent of the U.S. rice crop is milled in comparision to less than 10 percent of the domestic corn crop and approximately 30 percent of the U.S. wheat crop. The product of rice mills is whole grain rice.

Rice is harvested "green" or rough and must be dried within forty-eight hours after harvest. After drying, rice can be stored indefinitely, awaiting milling. A good portion of the drying at this junction is conducted by on-farm dryers and commercial rice dryers.

Rice is grown in three principal regions in the U.S.: (1) California, (2) Gulf Coast along Texas and West Louisiana, and (3) Mississippi River valley along Arkansas, Mississippi, and Northeastern Louisiana. Mill size, configuration, and ownership patterns vary from region to region. In Louisiana are found the smallest plants, which are family owned. Texas and California have the largest mills. Co-ops own the plants in California (about 80 percent) and Arkansas (about 60 percent). Elsewhere, private individuals and corporations own the rice mills.

The number of rice mills has decreased from 74 in 1963 to 56 in 1972.[11] The plant closings have been primarily due to acquisitions and consolidations in Texas and California. Table 6-7 shows the profile of plants by employee size and value of shipments. The typical rice mill is assumed to process 2.88 million bushels of rice per year.

Table 6-7. SIZE PROFILE OF RICE MILLING INDUSTRY - 1967

Number of employees in establishment	Number of establishments in sector	Approximate number of employees by sector	Value of shipments, $ million	Value added per employee, $ thousand
1 - 4	10	25	0.8	8.0
5 - 9	6	42	21.0	9.5
10 - 19	6	95	10.4	36.8
20 - 49	18	630	65.7	13.6
50 - 99	17	1240	191.3	23.5
100 - 249	7	1000	121.8	24.9
250 - 499	4	1300	156.4	28.5
TOTAL	68	4200	548.4	24.7

Source: Census of Manufactures, 1967

On the other hand, ownership of commercial rice dryers is spread among many small firms. There were some 219 commercial rice dryers in 1973.[12] The plant size of these dryers varies from 100,000 bushel capacity to 7 million bushel capacity. Most plants are less then 500,000 bushel capacity. (The terms capacity and annual throughput are used interchangeably in this analysis for dryer facilities because they are assumed to have an annual throughput to capacity ratio of 1.0.)

In terms of ownership, some 160 of the dryers are owned by independents, or 73 percent of the total; yet, the independents only own 59 percent of the storage capacity. Farm cooperatives who own this remaining portion of the dryers, are most important in Arkansas. These dryers are the largest in the industry and the co-operatives control some two-thirds of the marketing. California is also important in terms of co-operative participation in drying. In recent years new investment in drying and storage capacity in California has only been initiated by cooperatives or large independent rice mills. Elsewhere, in particular in Louisiana and Mississippi, the major trend has been toward on-farm drying and storage.

Integration of drying and storage with milling has been growing in California. Low returns on drying and storage as a result of low fees set by the California Public Utilities Commission has discouraged commercial rice dryers. As a result, the mills have invested in drying and storage to assure access to grain supplies. In the Mississippi River Delta Region, backward integration from rice mills to rice dryers has not occurred.

The growth in demand for rice will most probably come from the international sector, particularly Asian countries where rice is a dietary staple. Domestic demand remains relatively unchanged. Recent history has witnessed shortages of rice and upsurge in prices, prompted by increased demand in the foriegn sector concurrent with crop failures in the rest of the world. The outlook for prices is uncertain, but the world demand will be growing.

One of the few areas in the world that can expand production rapidly is the U.S. However, this is constrained to the Mississippi River Delta Region where both water and land are available to support increased production. Increased production will require additional drying and storage facilities.

It is difficult to predict who will build new drying and storage facilities. As pointed out earlier, these functions can be done on-farm, commercially, or by the rice mills themselves. The economic analysis is structured on the basis that either commercial rice dryers or mills will be prospective new sources.

From the standpoint of the pricing mechanics, any incremental costs incurred by the mills are assumed to be passed backward to the commercial rice dryers or farmers. This argument is similar to the one used in the marketing of the other grains.

As far as expansion projections, Arthur D. Little estimated that 10 new rice mills would be built over the next five years ending in 1981. These mills are assumed to require storage facilities. Added drying capacity to handle the incremental production for these mills is assumed to be shared with these mills and new commercial rice dryers.

6.2 CONTROL COSTS AND COST EFFECTIVENESS FOR NEW/RECONSTRUCTED SOURCES

6.2.1 Introduction

The purpose of this section is to present estimates of capital and annualized costs for control technology alternatives which may be used in developing the rationale for recommending new source performance standards. This section will combine new and reconstructed facilities for the reason that most of the anticipated growth will be in the area of expanding and upgrading existing grain elevator facilities. The grain handling industry in this section will be divided between the distribution system (grain elevators) and grain processors. In addition, grain dryers, which are a support function in the grain distribution system, will be highlighted and discussed as a separate topic on cost effectiveness.

Most of the discussion on control alternatives and costs will be emphasized in the grain elevator segment. Following the discussion of control technology alternatives for the individual affected facilities will be a presentation of control costs for three levels of control system alternatives on a model plant basis. (The model plant comprises several unit affected facilities.) In the presentation of the model plant control systems, costs will be presented for each affected facility.

The incremental costs of the alternative levels of control above costs for State requirements will be identified. The incremental costs are important in determining the economic impact of proposed performance standards.

Throughout the section, the terms capital and annualized cost are used; therefore, a brief definition is in order. The capital

cost includes all the cost items necessary to design, purchase, and install the particular control system. The capital cost includes the purchased cost of the major control device (fabric filter or high efficiency cyclone) and auxiliaries such as hoods, fans, and any instrumentation; the equipment installation cost including foundations, piping, electrical, wiring, retrofitting (reconstructed sources), and erection; and the cost of engineering, construction overhead, and contingencies. All costs are updated to reflect January 1976 dollars.

The major source of control costs for this study was the Midwest Research Institute report (MRI).[13] Other sources of cost data were the Arthur D. Little study (ADL),[14] vendors[15,16,17] (in particular, for grain dryers), and grain handling operators.[18,19]

The following assumptions were used to determine annualized costs. Annual capital charges were calculated on the basis of 100 per cent institutional lending with uniform type payments (capital recovery factor). Life of equipment was assumed to be 15 years; rate of interest, 10 per cent. Property taxes and insurance and administrative costs were calculated on the basis of 4 per cent of total capital investment. The electrical expenses were determined from the electrical requirements presented in Chapter 7 for grain handling. The cost of electricity was assumed as 3 cents per kilowatt-hour. Maintenance costs for fabric filters were estimated as $0.13 per cfm; high efficiency cyclones, $0.065 per cfm. Fuel for grain dryers was assumed to be $2.00 per million BTU. Operating and maintenance requirements for grain dryer controls were obtained from the various vendors.

No credits for product recovery, reduced fire insurance premiums, reduced absenteeism of workers, or reduced plant maintenance have been incorporated in the pollution control costs. Even where the by-products may have significant market values, the assessment of these credits is difficult. Therefore, for simplification purposes, accounting for credits has been omitted in this analysis.

6.2.2 Grain Elevators

The scope of the grain handling industry under investigation extends from the small country elevator (on the order of 250,000 bushel storage) to the port terminal (storage capacity of 5 million bushels).

Most of the anticipated expansion in the industry will be in response to cost savings techniques within the grain distribution system. To a lesser degree, some local expansion may occur with a surge in regional grain production or consolidation of distribution facilities. The type of expansions that are likely to be considered as reconstructed sources are those that will upgrade country elevators to accept unit-trains of 25, 50, 75, or 100 cars with emphasis on fast loading in a 24 hour period. This will create a need on the part of the existing elevator to expand storage and increase leg capacity. On the other hand, the high throughput terminal, characterized by minimizing storage and specializing in one grain to serve the export markets, will be the likely candidate for the new grass roots facilities.

The affected facilities are: truck loading/unloading, railcar loading/unloading, barge/ship loading, barge/ship unloading, handling (including conveyors, scales, surge bins, grain cleaning, etc.), and grain dryers. The control technology for each affected facility consists of various degrees of particulate capture (enclosures, hooding) and removal (fabric filteration vs cyclones). Grain dryers are somewhat different in that screen mesh and column perforation diameters are the critical factors in their design and performance. A summary of available control technologies for each affected facility is presented in Table 6-8 for

three "levels" delineated as: a) best control technology, b) recommended control technology, and c) control technology for state requirements.

The categorization of controls in this manner allows for easy association by the reader with the alternative control levels used later in this analysis on a model plant basis. As shown in the table, the major difference between A and B is the shed requirements for railroad car loading and the vacuum-cleaned screen requirement on column dryers. There are technical reasons why the totally enclosed sheds might not be reasonable in addition to significant cost differences. The selection of best control technology on the grain dryers is a separate issue from the grain loading, unloading, and handling facilities in B. It will be discussed further in the chapter.

The next step is to characterize the model plants and assimilate these affected facilities into their configurations. Six model plants that represent the types of new and reconstructed sources as discussed previously are presented in Table 6-9 with the important engineering parameters that are used in determining costs. The parameters for storage capacity, throughput capacity (leg capacity), annual throughput, and dryer capacity are given. Ventilation rates (acfm) are presented for control systems to handle the particulate emissions for the various affected facilities.

The model plant sizes used in this analysis are sometimes different from sizes of similar plants in the MRI study. Capital costs were adjusted by a scale factor of 0.7 (i.e., cost of Control System A = Cost of Control System B x (Ventilation Rate of A ÷ Ventilation Rate of B)$^{0.7}$). Ventilation

TABLE 6-8. SUMMARY OF CONTROL TECHNOLOGIES ON AFFECTED FACILITIES

Affected Facility	A. Best Control Technology	B. Recommended Control Technology	C. Control Technology for State Requirements
Truck Loading/Unloading	Totally enclosed shed with quick closing doors (2), ventilated hopper, FF.	Shed with 1 quick closing docr (other: opened) ventilated hopper, FF	Ventilated hopper CY (weather conditions may require shed or roof cover)
Box Car Loading	Totally enclosed shed with quick closing doors (2), tightly sealed (side-door) hooding system, FF	Shed with open ends Same hooding, FF as (A)	Some form of hooding system, CY
Hopper Car Loading	Totally enclosed shed with quick closing door(2), hood, special loading spout, FF	Shed with open ends Same hooding, FF as (A) Special loading spout	Same hooding as (A), CY
Railcar Unloading	Totally enclosed shed with quick closing doors (2), ventilated hoppers, FF	Same as (A)	Shed with one end closed CY (except for FF on Port Terminal)
Grain Handling	Ventilation, FF	Same as (A)	Ventilation, CY (FF on Terminals)
Barge/Ship Loading	A choke-feed spout ventilation, FF	Same as (A)	Choke-feed spout, ventilation, CY (except for FF on inland terminal)
Barge/Ship Unloading	Totally enclosed leg, ventilation, FF (subject to equipment specifications on enclosure aspiration)	Same as (A)	Enclosed leg, ventilation, FF
Grain Dryers	Vacuum-cleaned screen/any type	Vacuum-cleaned screen/rack No screen/column	Screen/Rack No screen/column

Reference to Abbreviations: FF - fabric filter
CY - high-efficiency cyclone (efficiency = 90%)

TABLE 6-9. MODEL PLANT CHARACTERISTICS FOR THE GRAIN ELEVATOR INDUSTRY

Description	MODEL PLANT 1 Traditional Country Elevator	MODEL PLANT 2 Upgraded Country Elevator (25 cars)	MODEL PLANT 3 Upgraded Country Elevator (50 to 100 cars)	MODEL PLANT 4 New High Throughput Terminal	MODEL PLANT 5 Traditional Inland Terminal	MODEL PLANT 6 Port Terminal
Capacity						
1. Storage - bu.	500,000	500,000	500,000	350,000	5,000,000	5,000,000
2. Thruput - bu. per yr	1,000,000	1,000,000	3,500,000	3,500,000	15,000,000	40,000,000
3. Leg - bu. per hr.	1 x 5000	1 x 10,000	2 x 15,000	2 x 15,000	4 x 15,000	4 x 35,000
4. Dryer - bu. per hr.	1,000	1,000	2,000	2,000	2,000	2,000
Control System Ventilation Rates, ACFM						
1. Combined Receiving/ Loading	10,000	16,400	--	--	--	--
2. Truck Receiving	--	--	12,250	12,250	12,250	12,250
3. Railroad Car Receiving	--	--	--	--	15,000	25,000
4. Barge Receiving	--	--	--	--	--	15,000
5. Handling, Weighing	3,000	4,000	2 x 6,000	2 x 6,000	--	--
6. Handling, Turning, Barge Loading (Inland Terminal)	--	--	--	--	45,000	45,000
7. Scale and Garner	--	--	--	--	2 x 6,000	2 x 10,000
8. Railroad Car Loading	--	--	10,000	10,000	2 x 10,000	--
9. Drying	30,000	30,000	60,000	60,000	60,000	60,000
10. Cleaning	--	--	5,000	5,000	10,000	20,000
11. Ship Loading	--	--	--	--	--	20,000

rates were assumed to be directly proportional to material throughputs, subject to physical constraints such as spatial requirements for grain unloading or loading (boxcar, hopper car, barge, ship, etc.). Operating costs were adjusted in direct proportion to changes in material throughput or hours of operation.

A tabulation of the capital and annualized costs for the individual affected facilities for each model plant for three levels of control is presented in Table 6-10. It is important to point out here that new sources affected by new source performance standards will have to compete with new sources, and existing sources retrofitted prior to 1975, constructed in compliance with State regulations. Hence, level C serves as the baseline for comparison of the costs of various control system alternatives.

To show the impact of the pertinent standards upon the grain industry requires segregating certain service-associated costs. Hence, drying, cleaning, and handling (unloading, turning, weighing, loading) are separate functions in so far as the mechanism of sharing the transaction costs for each function. For example, farmers producing those grains requiring cleaning and drying will have to pay for the costs of these services. As an aid to understanding of the segregation of control costs, a format for the annualized costs (aggregate and unit costs) has been prepared and is presented in Table 6-11.

For comparison with State regulatory requirements on new and reconstructed sources, Table 6-12 has been prepared to show those incremental costs over the State requirements for the levels of best control technology and recommended control technology. For the level of best control technology, unit costs

TABLE 6-10. TABULATION OF CAPITAL AND ANNUALIZED COSTS FOR ALTERNATIVE CONTROLS FOR NEW GRAIN ELEVATOR SOURCES

Model Plant	1 Traditional Country Elevator		2 Upgraded Country Elevator (25 cars)		3 Upgraded Country Elevator (50 to 100 cars)		4 New High Through Put Terminal		5 Traditional Inland Terminal		6 Port Terminal	
Annual Through Put, Bushels	1,000,000		1,000,000		3,500,000		3,500,000		15,000,000		40,000,000	
Retrofit Penalty	0%		20%		10%		0%		0%		0%	
	Inv.($)	Ann.($)	Inv.($)	Ann.($)	Inv.($)	Ann.($)	Inv.($)	Ann.($)	Inv.($)	Ann.($)	Inv.($)	Ann.($)
A. Best Control Technology												
Combined Unloading/Loading	103,400	19,700	146,000	27,600	--	--	--	--	--	--	--	--
Truck Unloading	--	--	--	--	53,000	11,400	52,300	10,600	48,200	10,200	48,200	10,200
Railroad Car Unloading	--	--	--	--	--	--	--	--	60,500	13,000	95,300	21,000
Handling, Weighing	17,000	3,600	25,000	5,200	60,800	13,400	55,300	12,500	--	--	--	--
Handling, Turning, Barge Unloading	--	--	--	--	--	--	--	--	145,300	41,800	145,300	41,800
Scale and Surge Bins	--	--	--	--	--	--	--	--	55,300	11,500	59,000	14,800
Railroad Car Loading	--	--	--	--	119,400	21,800	108,500	20,000	145,000	28,000	--	--
Cleaning	--	--	--	--	18,400	4,630	16,700	4,350	33,400	7,400	66,800	15,800
Ship Loading	--	--	--	--	--	--	--	--	--	--	66,300	15,100
Barge Unloading	--	--	--	--	--	--	--	--	--	--	42,300	9,500
Drying	27,600	5,600	27,600	7,000	39,900	8,700	39,900	8,700	39,900	8,700	39,900	8,700
Totals	148,000	28,900	198,600	39,800	291,500	59,900	272,700	56,200	527,600	120,600	563,100	136,900
B. Recommend Control Technology												
Combined Unloading/Loading	55,600	11,500	88,400	17,800	--	--	--	--	--	--	--	--
Truck Unloading	--	--	--	--	45,300	10,100	41,200	9,400	41,200	9,000	41,200	9,000
Railroad Car Unloading	--	--	--	--	--	--	--	--	60,500	13,000	95,300	21,000
Handling, Weighing	17,000	3,600	25,000	5,200	60,800	13,400	55,300	12,500	--	--	--	--
Handling, Turning, Barge Loading	--	--	--	--	--	--	--	--	145,300	41,800	145,300	41,800
Scale and Surge Bins	--	--	--	--	--	--	--	--	55,300	11,500	59,000	14,800
Railroad Car Loading	--	--	--	--	43,300	9,640	43,900	8,900	80,000	17,000	--	--
Cleaning	--	--	--	--	18,400	4,630	16,700	4,350	33,400	7,400	66,800	15,800
Ship Loading	--	--	--	--	--	--	--	--	--	--	66,300	15,100
Barge Unloading	--	--	--	--	--	--	--	--	--	--	99,700	9,500
Totals	72,600	15,100	113,400	23,000	172,800	37,770	157,100	35,150	415,700	99,700	516,200	127,000
C. Control Tech. For State Requirements												
Combined Unloading/Loading	32,850	6,700	55,800	11,300	--	--	--	--	--	--	--	--
Truck Unloading	--	--	--	--	24,000	5,400	21,800	5,000	21,700	4,700	21,700	4,700
Railroad Car Unloading	--	--	--	--	--	--	--	--	26,300	4,800	55,300	26,000
Handling, Weighing	10,850	2,300	16,000	3,400	60,800	13,500	55,300	12,500	--	--	--	--
Handling, turning, Barge Loading	--	--	--	--	--	--	--	--	145,300	41,800	145,300	41,800
Scale and Surge Bins	--	--	--	--	--	--	--	--	55,300	11,500	59,000	14,800
Railroad Car Loading	--	--	--	--	20,800	4,400	18,900	4,100	47,900	10,000	--	--
Cleaning	--	--	--	--	12,400	2,600	11,300	2,400	22,600	4,800	51,100	10,200
Ship Loading	--	--	--	--	--	--	--	--	--	--	50,600	10,500
Barge Unloading	--	--	--	--	--	--	--	--	--	--	42,300	9,500
Totals	43,700	9,000	71,800	14,700	118,000	25,900	107,300	24,000	319,100	77,700	425,300	117,500

TABLE 6-11. SUMMARY OF GRAIN ELEVATOR ANNAULIZED COSTS FOR ALTERNATIVES LEVELS OF CONTROL TECHNOLOGY/GRAIN ELEVATORS

A. Best Control Technology

Model	Receiving, Handling, etc.			Drying			Cleaning		
	Total	Volume	¢/BU	Total	Volume	¢/BU	Total	Volume	¢/BU
1. Traditional Country	$ 23,300	1MM	2.33	$5,600	500M	1.12	--	--	--
2. Upgraded - 25 car	32,800	1MM	3.28	7,000	500M	1.40	--	--	--
3. Upgraded - 50/100 car	46,600	3.5MM	1.33	8,700	1MM	0.87	$ 4,600	700M	0.66
4. High Throughput	43,100	3.5MM	1.23	8,700	1MM	0.87	4,350	700M	0.62
5. Traditional Inland	104,500	15MM	0.70	8,700	4MM	0.22	7,400	3MM	0.25
6. Port Terminal	112,400	40MM	0.28	8,700	1MM	0.87	15,800	6MM	0.26

B. Recommended Control Technology

Model	Receiving, Handling, etc.			Drying			Cleaning		
	Total	Volume	¢/BU	Total	Volume	¢/BU	Total	Volume	¢/BU
1. Traditional Country	$ 15,100	1MM	1.51	--	500M	--	--	--	--
2. Upgraded - 25 car	23,000	1MM	2.30	--	500M	--	--	--	--
3. Upgraded - 50/100 car	33,170	3.5MM	0.95	--	1MM	--	$ 4,600	700M	0.66
4. High Throughput	30,750	3.5MM	0.88	--	1MM	--	4,350	700M	0.62
5. Traditional Inland	92,300	15MM	0.62	--	4MM	--	7,400	3MM	0.25
6. Port Terminal	111,200	40MM	0.28	--	1MM	--	15,800	6MM	0.26

C. Control Technology for State Requirements

Model	Receiving, Handling, etc.			Drying			Cleaning		
	Total	Volume	¢/BU	Total	Volume	¢/BU	Total	Volume	¢/BU
1. Traditional Country	$ 9,000	1MM	0.90	--	500M	--	--	--	--
2. Upgraded - 25 car	14,700	1MM	1.47	--	500M	--	--	--	--
3. Upgraded - 50/100 car	23,300	3.5MM	0.66	--	1MM	--	$ 2,600	700M	0.37
4. High Throughput	21,600	3.5MM	0.62	--	1MM	--	2,400	700M	0.34
5. Traditional Inland	72,900	15MM	0.49	--	4MM	--	4,800	3MM	0.16
6. Port Terminal	107,300	40MM	0.27	--	1MM	--	10,200	6MM	0.17

NOTE: 1) Volume refers to annual throughput handled, dried, or cleaned in bushels per year.
2) All costs in January 1976 dollars.

TABLE 6-12. SUMMARY OF INCREMENTAL COSTS FOR ALTERNATIVE LEVELS OF CONTROL TECHNOLOGY ABOVE STATE REQUIREMENTS/GRAIN ELEVATORS

A. Best Control Technology

Model	Incremental Capital ($)	Incremental Annualized Costs ($/yr)	Handling and Drying Unit Costs (¢/bu)		Cleaning Unit Costs (¢/bu)
			With Drying	W/O Drying	
1. Traditional Country	104,300	19,900	2.55	1.43	0
2. Upgraded-25 car	126,800	25,100	3.21	1.81	0
3. Upgraded-50/100 car	173,500	34,000	1.54	0.67	0.29
4. High Throughput	165,400	32,200	1.48	0.61	0.28
5. Traditional Inland	208,500	42,900	0.43	0.21	0.09
6. Port Terminal	137,800	19,400	0.88	0.01	0.09

B. Recommended Control Technology

Model	Incremental Capital ($)	Incremental Annualized Costs ($/yr)	Handling Unit Costs (¢/bu) W/O Drying	Cleaning Unit Costs (¢/bu)
1. Traditional Country	28,900	6,100	0.61	0
2. Upgraded-25 car	41,600	8,300	0.83	0
3. Upgraded-50/100 car	54,800	11,900	0.29	0.29
4. High Throughput	49,800	11,200	0.26	0.28
5. Traditional Inland	96,600	22,000	0.13	0.09
6. Port Terminal	90,900	9,500	0.01	0.09

have been calculated for grain handled without drying and for that portion of grain handled and dried.

6.2.3 Grain Processors

The purpose of this section is to present control costs which will serve as inputs for the economic analysis of the impact of control alternatives upon the grain processing industry. The basic procedure is to present capital and annualized costs for air pollution control systems for the model plant configurations, in much the same fashion as in the previous section for grain elevators. Thus, control costs will be presented for best controls, recommended controls, and controls for meeting State regulations. The incremental costs for best and recommended controls above State requirements will be noted.

The affected facilities include truck and railroad car unloading, handling (transfer, scales, etc.) and dryers. The scope of the grain processing industry under investigation includes wheat flour mills, dry corn mills, rice mills, wet corn mills, soybean processors, and commercial rice dryers. The engineering parameters for estimating the control costs are presented in Table 6-13. The control technology for the alternative control levels is much the same as that applied for the grain elevators. The capital and annualized control costs for each of the affected facilities is presented in Table 6-14. The one major difference in costs between grain processors and elevators appears in the truck unloading facility/best technology category. Costs are presented for an expanded truck shed to accomodate unloading tractor trailer trucks where 2 quick-closing doors would be considered as best technology.

TABLE 6-13. MODEL PLANT CHARACTERISTICS FOR GRAIN PROCESSORS/CONTROL REQUIREMENTS FOR GRAIN HANDLING FACILITIES

Description	Wheat Mill	Dry Corn Mill	Rice Mill	Rice Dryer	Soybean Processor	Wet Corn Milling
Grain Handled, bu. per year	2,778,000	3,348,000	2,880,000	767,000	11,100,000	10,000,000
Elevator Leg Capacity, Bu. Per Hour	5,000	6,000	5,000	7,000	20,000	20,000
Operating Hours (Receiving)	2,500	2,500	2,500	500	2,500	2,500
Mill Capacity	5,000 CWT/24 hr.	5,000 CWT/24 hr.	200 bbl per hr.	2,000 Bu/hr.	1,000 Ton/24 hr.	30,000 Bu/24 hr.
Annual Output	1,250,000 (CWT)	1,250,000 (CWT)	800,000 (162 lb per bbl)	345,000 CWT Processed	330,000 Ton Processed	10,000,000 Bu. Processed
Grain Weight Density lb. per Bu.	60	56	45	45	60	56
Control System Ventilation Rates, ACFM						
a) Truck Unloading	12,250	12,250	same as Dry Corn Mill	-	same as Dry Corn Mill	same as Wheat Mill
b) Car Unloading	25,000	25,000		-		-
c) Handling and Transfer	25,000	25,000		-		-
d) Scale and Surge Bins	10,000	10,000		3,000		-
e) Dryer	-	30,000		60,000		-
f) Unloading/Loading	-	-	-	12,250	-	

TABLE 6-14. TABULATION OF CAPITAL AND ANNUALIZED COSTS FOR NEW SOURCES/GRAIN PROCESSORS, COMMERCIAL RICE DRYERS

All Grain Processors	A. Best Control Technology		B. Recommended Control Technology		C. Control Technology for State Requirements	
	Inv. ($)	Ann. ($)	Inv. ($)	Ann. ($)	Inv. ($)	Ann. ($)
Truck Unloading	62,200[1]	13,900	41,200	10,300	21,800	5,800
Car Unloading	75,300	20,700	75,300	20,700	36,700	10,400
Handling, Transfer	80,200	28,900	80,200	28,900	61,600	18,300
Scale and Surge Bins	31,100	8,100	31,100	8,100	20,300	5,000
Dryers	-- [2]	-- [2]	--	--	--	--
TOTALS	248,800	71,600	227,800	68,000	140,400	39,500
Commercial Rice Dryers	**Inv. ($)**	**Ann ($)**	**Inv. ($)**	**Ann. ($)**	**Inv. ($)**	**Ann. ($)**
Unloading/Loading	69,300	14,200	62,300	13,000	37,800	7,800
Handling, Scale	17,000	3,700	17,000	3,700	10,600	1,000
Dryers	39,900	8.700	--	--	--	--
TOTALS	126,200	26,600	79,300	16,700	48,400	8,800

(1) Costs include expansion of truck shed to accommodate two quick-closing doors.

(2) For dry corn millers and soybean processors, control capital for dryers is $27,600. Annualized costs are $5,600 per year. In addition, some rice mills may dry rice.

Summaries of capital and annualized costs for alternate controls are presented in Table 6-15 for the grain processors and the commercial rice dryers. Summaries of incremental costs above State standards are presented in Table 6-16. Grain processors affected by drying operations have been separated out to highlight the impact of dryer costs for the best control technology level.

Table 6-15. Summary of Grain Processors' and Commercial Rice Dryers' Costs for Alternative Control Levels

Grain Processor		A. Best Control Technology (Including Dryers)	B. Best Control Technology (w/o Dryers)	C. Recommended Control Technology	D. Control Technology for State Requirements
Capital Costs ($)		276,400	248,800	227,800	140,400
Annualized Costs ($/Yr)		77,200	71,600	68,000	39,500
Type Grain	Annual Throughput, Bu.	Unit Costs (¢/Bu)	Unit Costs (¢/Bu)	Unit Costs (¢/Bu)	Unit Costs (¢/Bu)
Wheat	2.78 MM	NA	2.58	2.45	1.42
Wet Corn	10.00 MM	NA	0.72	0.68	0.40
Rice	2.88 MM	2.68	2.49	2.36	1.37
Dry Corn	3.35 MM	2.30	2.14	2.03	1.18
Soybean	11.10 MM	0.70	0.65	0.61	0.36

Commercial Rice Dryer	A. Best Control Technology (Including Dryers)	B. Best Control Technology (w/o Dryers)	C. Recommended Control Technology	D. Control Technology for State Regulation
Capital Costs ($)	126,200	86,300	79,300	48,400
Annualized Costs ($/Yr)	26,600	17,900	16,700	8,800
Unit Costs (¢/Bu) (Annual Throughput, 0.77 MM Bu/Yr)	3.45	2.32	2.17	1.14

Table 6-16. Summary of Grain Processors' and Commercial Rice Dryers' Incremental Costs for Alternative Control Levels Above State Requirements

Grain Processor		A. Best Control Technology (including Dryers)	B. Best Control Technology (w/o Dryers)	C. Recommended Control Technology
Incremental Capital Costs ($)		136,000	108,400	87,400
Incremental Annualized Costs ($/yr)		37,700	32,180	28,500
Type Grain	Annual Throughput, Bu	Unit Costs (¢/Bu)	Unit Costs (¢/Bu)	Unit Costs (¢/Bu)
Wheat	2.78 MM	NA	1.16	1.03
Wet Corn	10.00 MM	NA	0.32	0.28
Rice	2.88 MM	1.31	1.12	0.99
Dry Corn	3.35 MM	1.13	0.96	0.85
Soybean	11.10 MM	0.34	0.29	0.25

Commercial Rice Dryer	A. Best Control Technology (including Dryers)	B. Best Control Technology (w/o Dryers)	C. Recommended Control Technology
Incremental Capital Costs ($)	77,800	37,900	30,900
Incremental Annualized Costs ($/yr)	17,800	9,100	7,900
Incremental Unit Costs, (¢/bu) (Annual Throughput, 0.77 MM Bu/yr)	2.31	1.19	1.03

6.2.4 Cost Effectiveness for Grain Dryers

The purpose of this section is to present the costs of various controls on grain dryers against their performance in reducing emissions. In this section, the capital and annualized costs for a 2000 bushel/hour dryer system, including controls, will be presented. Both rack and column dryers will be reviewed.

The 2000 bu/hr. dryer is assumed to remove 5 percentage points of moisture and to operate 500 hours annually. This size and operation represents the typical operation at a country elevator that specializes in handling corn and soybean grains. It also represents the typical commercial rice dryer.

The cost data for the dryers and controls are based on vendors quotations and the Arthur D. Little study, as discussed in Section 6.2.1.1. The assumptions used in calculating annualized costs were presented in Section 6.2.1.1.

The only two levels of control analyzed were screens and vacuum-cleaned screens. Attempts in establishing a cost-effectiveness relationship versus screen mesh were unsuccessful. Contact with various vendors brought a mixed response as far as cost differences in mesh size. The most important factor of cost was found to be the vacuum-cleaning mechanism for removal of collected particulate matter from the screen enclosure.

A summary of the capital, annualized costs, incremental annualized costs, and cost-effectiveness are presented in Table 6-17. The data in the table suggest that the column dryer without a screen is just as effective as a rack dryer with the vacuum-cleaned screen, as far as

Table 6-17. Summary of Cost-Effectiveness for Grain Dryers

Dryer Description	Investment ($)	Annualized Costs ($/yr)	Unit Costs ($/BU)	Incremental Unit Costs ($/BU)	Mass Emissions (lb/Ton)[1]	Incremental Cost per lb Pollutant Removed ($/lb)
Rack/Screen	114,300	39,430	0.0394	0	1.10	0
Rack/Vacuum Clean Screen	152,000	47,700	0.0477	0.0083	0.275	0.34
Column/no Screen	105,000	39,300	0.0393	0	0.25	0
Column/ Vacuum Clean Screen	158,400	51,430	0.051	0.0117	0.05	1.95

[1] Assume 60 lbs. of grain per bushel.

mass emissions are concerned. The rack dryer with the non-vacuum-cleaned screen may be just as expensive as the column dryer with no screen, both costing about 3.93 cents per bushel; but the rack dryer produces a significantly greater amount of emissions.

In terms of cost-effectiveness, the requirement of a vacuum-cleaned screen on the column dryer will cost $1.95 per incremental pound of pollutant removed. For the rack dryer, the requirement of a vacuum-cleaned screen would cost about $0.34 for each incremental pound of pollutant removed.

6.3 ECONOMIC IMPACT ANALYSIS FOR NEW AND RECONSTRUCTED SOURCES

6.3.1 Introduction

In this section, the economic impact of incremental control costs is assessed for new and reconstructed sources in the grain distribution system (grain elevators), grain processors (unloading facilities and grain handling), and grain drying operations. The incremental control costs developed for the alternative controls in Section 6.2 will serve as the input for the analysis in this section. The economic impact will be addressed in terms of new sources to be built for each alternative control level. The conclusion regarding the impacts at various levels will then be incorporated as a decision tool in recommending standards in the rationale chapter.

6.3.2 Grain Storage Elevator and Dryers

One important trend in the grain industry is an increased demand for high throughput elevators. The recent upsurge in foreign demand for U.S. grain, the slow but steadily increasing domestic demand for grain, the lower level of grain stocks, the trend toward more on-farm storage, and the attractive railroad tariff offered by some railroads for multi-car shipments have combined to produce two major effects: (1) a decrease in the demand for grain elevators to store grain, and (2) an increase in the demand to handle and move larger quantities of grain. The above forces have stimulated the construction of elevators which are located in the country and have moderate to low storage capacity and the ability to handle grain quickly. Likewise, these forces have stimulated some elevator operators to modernize their existing country elevators to load 25, 50, or 100 jumbo hopper cars quickly.[20]

As a result of this trend most new elevators are being designed with similar storage capacity but relatively high throughput compared with existing country elevators. Whereas a conventional country elevator might have a throughput of 1,000,000 bushels per year with storage capacity of 500,000 bushels, the new high throughput terminal elevator would have the same storage capacity and 3,500,000 bushels per year throughput. Some 105 low storage-high throughput inland terminal elevators would be constructed in the absence of standards of performance over a 5 year period terminating in 1981.[21] Also an estimated twelve inland (traditional) terminals and five port terminals would be constructed in the absence of standards over the same time period.[22]

According to ADL, the typical country elevator with a storage capacity of 200,000 to 500,000 bushels and an annual throughput ratio of 2-3 is generally not being constructed at this time. Except for replacement of a country elevator destroyed by fire or explosion, or for filling an unusual local need, little economic incentive exists for construction of new country elevators through 1981. Nevertheless, a projected number of some 40 low storage, low throughput country elevators may be built, primarily to replace destroyed facilities, through 1981.[23]

EPA contact with builders of grain elevators in the midwest found that some small country elevators may be built.[24,25] One builder indicated that possibly in certain localities without adequate rail facilities, there might be a need for a new country elevator. In such areas, the trend is toward construction of more storage, rather than new elevator construction, and conveyance of grain by tractor-trailer truck haulage to a terminal elevator.

A second important trend is modernization of existing country elevators to load a large number of railroad cars in a relatively short time. Not all existing country elevators can upgrade their facilities to load multi-car trains; but, those that do have the opportunity would realize a substantial savings in freight costs. It is important to emphasize that unless the freight savings are available, there would be no economic incentive to upgrade the handling capacity at a country elevator. Expansion in grain production could be accommodated by addition of storage capacity alone. Nevertheless, an estimate of 140 modernizations (i.e. upgrading throughput capacity) will occur by 1981 to utilize 50-100 car trains and some 215 modernizations to utilize 25-car (or fewer in number) trains.[26] These estimates are for facilities constructed in the absence of new source performance standards.

Another issue, aside from growth in grain elevators, is the construction of new grain dryers by grain elevators along the grain distribution system. These dryers are particularly important to those country elevators and inland terminals that handle and store corn and soybean grains and to those port terminals that load grain for export markets. Some 1382 grain drvers are expected to be built in the absence of new source performance standards through 1981.

A summary of the number of new and reconstructed grain storage elevators and dryers to be built in the absence of new source performance standards over the 1976-1981 time period is presented in Table 6-18.

The following assumptions are used in analyzing the economic impact of incremental control costs associated with control levels which are more stringent than current State regulations. Any new elevator must compete

TABLE 6-18. GRAIN STORAGE ELEVATORS--ANTICIPATED NUMBER OF NEW AND RECONSTRUCTED SOURCES IN ABSENCE OF NSPS (January 1, 1976 to December 30, 1981)

	New, Reconstructed Grain Elevators	New Grain Dryers
Country Elevators	40	1115
Country Elevators (Upgraded to 25 car trains)	215	70
Country Elevators (Upgraded to 50-100 car trains)	140	57
High Throughput Terminals	105	65
Traditional Inland Terminals	12	65
Port Terminals	5	10

not only with other elevators in a one-on-one sense but also with rival transportation and distribution systems composed of country elevators and terminals. Each new elevator that collects grain from the farmer and distributes it to an end point, such as a port terminal or processor, is creating a new collection and transportation system that is competing with existing similar systems. All existing elevators have incurred control costs to meet State regulations as of July 1, 1975 and have passed these costs through their respective distribution systems along to producers and consumers of grains and possibly absorbed some. It would appear that these costs are approximately equal to current dollar value of controls for meeting State regulations on new and reconstructed sources. In other words, retrofitting controls to existing sources prior to July 1, 1975 would probably find that a 20 to 30 percent retrofit penalty to be completely offset by an inflation rate of the same magnitude for new sources built in 1976 or 1977. Any new single elevator to be built must either absorb any incremental costs that exceed controls for compliance with State regulations or pass them back to the farmer if it cannot assimilate these costs into its total distribution (including transportation) system costs. The individual elevator operator is a small participant in the total world grain market and cannot be expected to singularly pass his costs forward to the consumer.

In the analysis of the traditional country elevators, the existing country elevator is assumed to have a total distribution system cost of 48.8 cents per bushel, which includes pollution controls in compliance with State regulations. In this system, grain moves from the country elevator through the inland terminal to the port terminal, or processor. In this system, profit for the country elevator is assumed to be 2.1 cents per bushel. Incremental control costs associated with best control technology

with drying amount to 2.55¢ per bushel (see Table 6-12) and 1.43¢ per bushel without drying for a new or rebuilt elevator. The possibility of passing these incremental costs back to the farmer appears remote except in those areas where the rebuilt country elevators may be several miles away from competing elevators. Generally country elevators are found in clusters. A distance of only some 2-5 miles might separate elevators within a given cluster whereas distance between clusters may be 20 to 40 miles or more. If one elevator in a cluster is rebuilt and incurs the additional costs of controls, then this elevator will have a distinct competitive disadvantage if it attempts to pass the cost back to the farmer. The farmer, given this situation, will merely bypass the newly constructed country elevator and sell his grain to one of the other elevators, who may have sufficient storage capacity.

If the competitive situation exists as just discussed for the new or rebuilt country elevators, the costs of 2.55¢ per bushel and 1.43¢ per bushel (Table 6-12) completely absorbs or nearly absorbs the 2.1¢ expected profit for the new source. In the judgment of EPA, this is sufficient reason to believe that the 40 country elevators would not be built if best control technology were required. Furthermore, best dryer controls for new dryers built at existing country elevators would be expected to preclude the construction of approximately 524 dryers.

The recommended controls will require an incremental cost of 0.6¢ per bushel, which would reduce an expected profit of 2.1 cents per bushel by 29 percent if these costs were absorbed by the country elevator. In the judgment of EPA this profit reduction may be sufficient to preclude the construction of elevators for some 50 percent of the anticipated 40 elevators. It is difficult to second-guess management viewpoint in this type of situation; the best perception of the collective opinion of 40

elevator operators would be that they would be divided equally on this issue of rebuilding an elevator. Hence, this is the argument for the estimate of the impact of precluding the construction of 20 elevators for the recommended control level.

For the analysis of the upgraded country elevators and high throughput terminals, the importance of the transportation system becomes apparent in the impact analysis. Table 6-19 shows the estimated total grain distribution costs for various distribution systems in which grain can proceed from the point of delivery at the country or inland terminal up to delivery at a port terminal or grain processor. Pollution control costs have been assimilated into these cost structures for the alternative control levels. Systems 2 through 5 involved prospective new sources in competition with an existing country elevator-existing inland terminal-port system (System 1). As mentioned earlier, the only incentive for upgrading or building a high throughput terminal was the possible reduction of transportation costs.

A review of Table 6-19 finds that System 2 elevator systems, those that are far removed from the terminal point of consumption, may find a problem in remaining competitive with existing country elevators. Incremental control costs for the alternative control levels would increase the total distribution costs up to a point (48.8¢/bu) beyond which the prospective upgraded elevator could no longer compete. For example, a System 2 elevator system would have to add 2.1¢ for pollution controls (for both upgraded country elevator and existing inland terminal), which would increase the distribution costs from 42.6-47.2 cents per bushel to 44.7 - 49.3 cents per bushel, with only those upgrades in the range of 44.7 - 48.8 cents remaining viable. Given that the

TABLE 6-19. MODEL GRAIN DISTRIBUTION COSTS (¢/BU.) FOR ALTERNATIVE CONTROLS AND SYSTEMS

	System 1 Existing Country Elevator To Existing Inland Terminal To Port/Processor	System 2 Upgraded Country Elevator (25 Car) To Existing Inland Terminal To Port/Processor	System 3 Upgraded Country Elevator (25 Car) Directly To Port/Processor	System 4 Upgraded Country (Elevator (50-100 Car) Directly To Port/Processor	System 5 New High Through Put Inland Terminal To Port/Processor
Elevator Operating Costs					
°Excl. Pollution Control	15.3	17.5	11.1	4.5	5.4
°Incl. Pollution Control for State Regulations	16.9	19.6	12.6	5.5	6.4
Transportation Costs	27.0	19.0 - 25.0	19.0 - 25.0	16.0 - 23.0	16.0 - 23.0
Profit	4.9	6.1	3.3	1.5	0.7
Total Distribution Costs					
°Excl. Pollution Control	47.2	42.6 - 47.2	33.4 - 39.4	22.0 - 29.0	22.1 - 29.1
°Incl. Pollution Control --					
a) State Regulations	48.8	44.7 - 48.8	34.9 - 40.9	23.0 - 30.0	23.1 - 30.1
b) Recommended Controls	NA	45.5 - 48.8	35.7 - 41.7	23.6 - 30.6	23.6 - 30.6
c) Best Controls w/o Dryers	NA	46.4 - 48.8	36.7 - 42.7	24.0 - 31.0	23.9 - 30.9
d) Best Controls w/dryers	NA	47.9 - 48.8	38.1 - 44.1	24.9 - 31.9	24.8 - 31.8

44.7 - 48.8 cents is a baseline for System 2 elevators in compliance with State regulations, incremental costs for recommended controls would raise the distribution costs to 45.5 - 48.8 cents per bushel. If the population of System 2 elevators were uniformly spread across this cost range, then it can be shown by mathematical calculation, $(1 - \frac{48.8 - 45.5}{48.8 - 44.7}) \times 100\%$, that the number of elevators would be diminished by 20 percent. Carrying this process further, applying best controls without the dryer vacuum-cleaned screen requirement would reduce the number of System 2 elevators by 44 percent from the baseline of State regulations. Best controls including the vacuum-cleaned screen requirement on dryers would reduce the number of System 2 elevators by 78 percent from the State baseline.

Table 6-20 shows the translation of these percentage reductions into actual numbers for the System 2 elevators. Some 43 elevators (25 corn/soybean and 15 wheat) are anticipated to be upgraded in the absence of Federal standards. Of these, 15 will install dryers (13 for corn/soybean and 2 for wheat). According to the table, the imposition of recommended controls would reduce the 43 elevators to 35; best controls without dryer vacuum-cleaned screen, to 24; and best controls with dryer vacuum-cleaned screen, to 9. Intuitively, it is expected that most elevators that derive their major revenues from drying (e.g., the 13 corn/soybean cases) would be directly affected by a stringent dryer standard. In any event, the impact would be a shift of the drying function from the System 2 to the System 3 elevators. The cost burden of 1.4 cents per bushel for drying controls in addition to the normal drying cost of 2.1 cents per bushel could be better handled by the

competitive elevator system with the distinct transportation advantage. This is shown in Table 6-20 for System 3 where the number of dryers would remain unchanged.

With regard to other types of elevators, there does not appear to be any impact as far as grain handling operations are concerned. For drying operations, the impact of vacuum-cleaned screen requirements would preclude the replacement of some 19 dryers for the upgraded country elevators (50 to 100 car) and high throughput terminals. (See Table 6-20.) No change is anticipated in the number of dryers at the traditional inland and port terminals.

The preceding analysis has been from the perspective of accommodating incremental annualized control costs that accrue to various elevators. It is also important to assess the incremental capital requirements in order to acquire more information that would support an economic impact analysis based on annualized costs. Table 6-21 presents the incremental capital requirements above the State regulation as a baseline for the three alternative control levels. For example, the upgraded elevator (25 cars) would require 12 per cent more capital for the proposed controls than for compliance with the State regulation. Comparing the derived data in Tables 6-20 and 6-21, general consistency can be found between the reduction in sources and incremental capital increases. The one noteworthy exception appears to be the entire group of upgraded country elevators imposed by the apparent significant increases for best controls with and without dryer vacuum-cleaned screen requirements. These substantial increases in the range of 21 to 37 percent appear sufficiently prohibitive to preclude the upgrading construction project, yet Table 6-20 shows no impact for upgraded country elevators that ship directly to port terminal or grain processors. The

TABLE 6-20. SUMMARY OF THE IMPACT OF ALTERNATIVES UPON CONSTRUCTION OF NEW SOURCES

	(Model 1) Traditional Country Elevators	(Model 2) System 2 Elevators	(Model 2) System 3 Elevators	(Model 3) System 4 Elevators	(Model 4) System 5 Elevators	(Model 5) Traditional Inland Terminals	(Model 6) Port Terminals
New Sources/Elevators							
a) State Regulations	40	43	172	140	105	12	5
b) Recommended Controls	20	35	172	140	105	12	5
c) Best Controls w/o dryer controls	0	24	172	140	105	12	5
d) Best Controls w/dryer control	0	9	172	140	105	12	5
New Sources/Dryers							
a) Without Standard	1115	15	55	57	65	65	10
b) Best Controls	625	0	55	48	55	65	10

TABLE 6-21. INCREMENTAL CAPITAL REQUIREMENTS FOR CONTROLS AT ALTERNATIVE CONTROL LEVELS

Model Plant	Total Fixed Assets (Including Controls)[1]							
	Before Control	State Regulation	Proposed Control		Best Controls (w/o Dryers)		Best Controls (incl. Dryers)	
			TFA	% Increase[1]	TFA	Increase[1]	TFA	% Increase[1]
(1) New Traditional Country Elevator	$ 610,000	$ 654,000	$ 683,000	4.4	$ 730,400	12	$ 758,000	16
(2) Upgraded (25 car)	267,000	339,000	380,000	12	438,000	29	465,600	37
(3) Upgraded (50-100 car)	506,000	624,000	679,000	9	757,600	21	797,500	28
(4) New High Throughput	1,030,000	1,137,000	1,187,000	4.4	1,263,100	11	1,303,000	15
(5) New Traditional Inland Terminal	6,360,000	6,679,000	6,776,000	1.5	6,843,000	2.5	6,890,000	3
(6) New Port Terminal	15,900,000	16,325,000	16,416,000	0.6	16,424,000	0.6	16,464,000	0.9

(1) Fixed assests include storage equipment, receiving and handling apparatus, cleaners, driers, and all other physical assets such as offices and parking facilities. The value of stored grain is not included in total fixed assets.

(2) % increase for the pertinent level of control relative to state regulation.

explanation for this is that some elevator operators would pursue the opportunity to significantly reduce their transportation and handling costs if they felt they could by-pass another elevator or terminal in their shipping to the final market. For the upgraded country elevators that can ship directly to the terminal, there are substantial savings in the total distribution costs. These savings are assumed to override the incremental capital burdens imposed for controls, with one exception, grain dryers. The basis for this assumption is that the more serious competition for upgraded elevators would be existing elevators, not inland or high-throughput terminals. Country elevators are more numerous and tend to be closer to one another; terminals are fewer and farther from other terminals.

6.3.3 Grain Processors

6.3.3.1 Soybean Processing

Increasing worldwide demand for meat and the unreliability of other high protein animal feed supplies has resulted in a high degree of growth for the soybean processing industry. The value of shipments for this industry increased from $1.5 billion in 1963 to $3.4 billion in 1972, an increase of about 9.5 percent per year. It is expected that worldwide demand for meat products will continue to grow dramatically with a correspondingly dramatic growth in demand for soybeans. Over the next five years, ten additional plants are expected to be built.

Table 6-22 illustrates the financial impact of pollution control on a model soybean processing plant. This model is representative of the larger mills to be built in the future. Case 1 represents the impact of pollution controls for a new source to comply with State regulations in the absence of new source performance standards. Cases 2 through 4 represent the impact for alternative control levels analyzed here for new source performance standards.

In comparing Cases 2-4 with Case 1, the percentage of control capital relative to fixed assets increases from 1.2 percent to the maximum of 2.4 percent for Case 4. Annualized control costs as a percentage of profits before taxes increase from 2 percent for State regulatory compliance to 3.9 percent for Case 4, the worst case. The price increase for the new source, under the worst case, required to maintain return on total assets is quite small - 0.15 percent versus 0.07 percent for the State regulation.

Table 6-22. Model Soybean Processing Plant

Pre-Control Financial Data	
Fixed Assets	$11,660,000
Total Assets	$29,930,000
Sales Revenue	$66,000,000[1]
Profit before Taxes	$ 2,000,000
Return on Total Assets (ROI)	6.7%

	Case 1 State Regulation	Case 2 Recommended Controls	Case 3 Best Controls (No Dryers)	Case 4 Best Controls (Incl. Dryers)
Control Capital	$140,400	$227,800	$248,800	$276,400
Annualized Control Costs	$ 39,500	$ 68,000	$ 71,600	$ 77,200
Control Capital ÷ Fixed Assets	1.2%	2.0%	2.1%	2.4%
Annualized Costs ÷ Profit before Taxes	2.0%	3.4%	3.6%	3.9%
Price Increase to Maintain ROI	0.07%	0.13%	0.13%	0.15%

[1] Annual Throughput, 11.1 MM Bushels/yr.

Source for financial data: Arthur D. Little (updated to 1976 dollars).

In view of the results presented in Table 6-22, no adverse impact on industry growth is judged to be caused by adoption of new source performance standards. A new source's profitability is expected to be maintained through a price increase of about 0.1 percent beyond current prices sufficient to maintain ROI for plants in compliance with State regulations. The additional capital requirements are considered reasonable.

6.3.3.2 Wheat Milling

The domestic wheat milling industry has not grown over the past few years. The demand for flour has decreased on a per capita basis because of the consumer's shift to meat as he has become more affluent. Therefore, excess milling capacity exists, leaving little incentive for adding storage or throughput capacity.

Table 6-23 illustrates the financial impact of pollution control on a model wheat milling plant. Case 1 represents the impact of pollution control for a new source to comply with State regulations in the absence of new source performance standards. Cases 2 and 3 represent the impact of alternative control levels analyzed here for new source performance standards. Wheat mills normally do not require grain drying; hence, the absence of a dryer vacuum-cleaned screen requirement in this model analysis.

In comparing Case 1 with Cases 2 and 3, incremental control capital requirements of $86,600 (Case 2) and $108,400 (Case 3) are only approximately 3 percent (as a percentage of total fixed assets) greater than for Case 1. Annualized control costs of $68,000 and $71,600,

Table 6-23. Model Wheat Mill

Pre-Control Financial Data

Fixed Assets	$3,480,000
Total Assets	$5,670,000
Sales Revenue	$11,342,000[1]
Profit before Tax	$ 530,000
Return on Total Assets (ROI)	9.3%

	Case 1 State Regulation	Case 2 Recommended Controls	Case 3 Best Controls (No Dryers)
Control Capital	$140,400	$227,800	$248,800
Annualized Control Costs	$ 39,500	$ 68,000	$ 71,600
Control Capital ÷ Fixed Assets	4.0%	6.5%	7.1%
Annualized Costs ÷ Profit before Taxes	7.5%	12.8%	13.5%
Price Increase to Maintain ROI	0.46%	0.79%	0.84%

[1] Annual Throughput, 2.78 MM Bushels/yr.

Source for financial data: Arthur D. Little (updated to 1976 dollars).

measured as a percentage of profits before taxes, are approximately 5 percent greater than for Case 1. Price increases required to maintain a historical ROI of 9.3 percent are approximately 0.8 percent, or 0.4 percent more than prices required to maintain profitability for plants in compliance with State regulations.

If there were growth in the wheat milling industry, the conclusion inferred from Table 6-23 is that no adverse impact will result from adoption of the new source performance standards. The price increase of 0.4 percent and additional capital requirement of 3 percent are judged to be reasonable.

6.3.3.3 Wet Corn Milling

Demand for wet corn mill products, primarily corn starch, has increased at approximately 4 - 5 percent per year over the last decade. No change in this growth rate is expected over the next five years. However, ample wet corn milling capacity exists, which suggests little need to add to existing capacity over the next five years.

Table 6-24 illustrates the financial impact of pollution control for a model wet corn milling plant. Case 1 represents the impact of pollution control for a new source to comply with State regulations in the absence of new source performance standards. Similar to wheat milling, the typical wet corn milling plant has no grain drying facility. Therefore, only two levels of control (Cases 2 and 3) are analyzed here for new source performance standards.

In comparing Case 1 with Cases 2 and 3, incremental control capital requirements of $86,600 (Case 2) and $108,400 (Case 3) are only approximately 0.25 percent (as a percentage of total fixed assets)

Table 6-24. Model Wet Corn Mill

Pre-Control Financial Data

Fixed Assets	$41,330,000
Total Assets	$54,070,000
Sales Revenue	$41,594,000[1]
Profit before Tax	$ 2,650,000
Return on Total Assets (ROI)	4.9%

	Case 1 State Regulation	Case 2 Recommended Controls	Case 3 Best Controls (No Dryers)
Control Capital	$140,400	$227,800	$248,800
Annualized Control Costs	$ 39,500	$ 68,000	$ 71,600
Control Capital ÷ Fixed Assets	0.34%	0.55%	0.60%
Annualized Costs ÷ Profit before Taxes	1.5%	2.6%	2.7%
Price Increase to Maintain ROI	0.11%	0.19%	0.20%

[1] Annual Throughput, 10 MM Bushels/yr.

Source for financial data: Arthur D. Little (updated to 1976 dollars).

greater than for Case 1. Annualized control costs of $68,000 and $71,600, measured as a percentage of profits before taxes, are approximately 1 percent greater than for Case 1. Price increases required to maintain historical ROI are on the order of 0.1 of 1 percent more than for a new plant in compliance with State regulations.

If there were growth in the wet corn milling industry, the conclusion inferred from the data in Table 6-24 is that no adverse impact will result from the adoption of new source performance standards. Incremental capital requirements and price increase required to sustain historic profitability are judged to be negligible.

6.3.3.4 Dry Corn Milling

Dry corn mills produce grits, cornmeal, corn flour, and a base for breakfast cereals. Production has remained nearly the same for the last decade; per capita consumption of all flour products has fallen as people substituted meat for baked goods. The industry has ample capacity, and per-capita consumption is expected to be level or slowly decreasing. Therefore, there is no incentive to expand capacity.

Table 6-25 illustrates the financial impact of pollution control for a model dry corn mill. Case 1 represents the impact of pollution control for a new source to comply with State regulations in the absence of new source performance standards. Cases 2 through 4 represent the impact for alternative control levels analyzed here for new source performance standards.

Table 6-25. Model Dry Corn Mill

Pre-Control Financial Data

Fixed Assets	$3,480,000
Total Assets	$5,670,000
Sales Revenue	$9,793,000[1]
Profit before Taxes	$ 530,000
Return on Total Assets (ROI)	9.3%

	Case 1 State Regulation	Case 2 Recommended Controls	Case 3 Best Controls (No Dryers)	Case 4 Best Controls (Incl. Dryers)
Control Capital	$140,400	$227,800	$248,000	$276,400
Annualized Control Costs	$ 39,500	$ 68,000	$ 71,600	$ 77,200
Control Capital ÷ Fixed Assets	4.0%	6.5%	7.1%	7.9%
Annualized Costs ÷ Profit before Taxes	7.5%	12.8%	13.5%	14.6%
Price Increase to Maintain ROI	0.46%	0.79%	0.84%	1.05%

[1] Annual Throughput, 3.35 MM Bushels/yr.

Source for financial data: Arthur D. Little (updated to 1976 dollars).

In comparing Cases 2 - 4 with 1, the percentage of control capital relative to fixed assets increases from 4 percent to the maximum of 7.9 percent for Case 4. Annualized control costs as a percentage of profits before taxes increase from 7.5 percent for State regulatory compliance to 14.6 percent for Case 4, the worst case. Price increases for the new source, under the worst case, required to maintain return on total assets are small - approximately 1 percent versus approximately 0.5 percent for the State regulation.

If growth were to occur in the dry corn milling industry, the incremental impact incurred by adoption of new source performance standards would not present a barrier to this growth. A price increase of some 0.5 percent to pay for the incremental controls for the most stringent level of controls and to maintain historic profitability appears to be reasonable for a new source. The same conclusion holds for the incremental capital requirements.

6.3.3.5 Rice Milling

The rice milling industry serves as a processor to the rice farming industry by cleaning and dehulling rough rice to produce whole grain milled rice. For the last several years, more than 60 percent of total domestic milled rice production has been exported. Since domestic per capita rice consumption has been stable for years and is expected to remain so in the future, any increases in domestic milled rice production will occur only as a result of increased international demand. This international demand will be expected to increase due to expanding population in countries where rice is a dietary staple. The United States remains one of the few areas in the world where agricultural

production can be expanded rapidly. Between 1972 and 1974, rice prices jumped from $5 per hundred pounds to $18 per hundred pounds for rough rice. Such an increase provided an incentive to expand grain production. However, the stability of these high prices and demand in overseas markets remain such an uncertainty that projection in future capacity growth is difficult. The requirements of coordinating marketing expertise, commodity trading sophistication, and capital investment planning to manage the risk of selling rice in the international markets will limit future growth to larger firms.

Table 6-26 illustrates the financial impact of pollution control on a model rice mill. Case 1 represents the impact of pollution controls for a new source to comply with State regulations in the absence of new source performance standards. Cases 2 through 4 represent the impact for alternative control levels analyzed here for new source performance standards.

In comparing Cases 2 - 4 with Case 1, the percentage of control capital relative to fixed assets increases from 3.9 percent to the maximum of 7.6 percent for Case 4. Annualized control costs as a percentage of profits before taxes increase from 6.2 percent to 12.1 percent for the worst case. Price increases for the new source, under the worst case, required to maintain return on total assets are relatively small - 0.59 percent versus 0.3 percent for the State regulation.

In view of the results presented in Table 6-26, no adverse impact on any industry growth is believed to occur with adoption of new source performance standards. A new source's profitability is expected to be maintained through a price increase of some 0.3 percent beyond

Table 6-26. Model Rice Mill

Pre-Control Financial Data

Fixed Assets	$3,630,000
Total Assets	$7,730,000
Sales Revenue	$17,010,000[1]
Profit before Taxes	$ 636,000
Return on Total Assets (ROI)	8.2%

	Case 1 State Regulation	Case 2 Recommended Controls	Case 3 Best Controls (No Dryers)	Case 4 Best Controls (Incl. Dryers)
Control Capital	$140,400	$227,800	$248,000	$276,400
Annualized Control Costs	$ 39,500	$ 68,000	$ 71,600	$ 77,200
Control Capital ÷ Fixed Assets	3.9%	6.3%	6.8%	7.6%
Annualized Costs ÷ Profit before Taxes	6.2%	10.7%	11.3%	12.1%
Price Increase to Maintain ROI	0.30%	0.51%	0.54%	0.59%

[1] Annual Throughput, 2.88 MM Bushels/yr.

Source for financial data: Arthur D. Little (updated to 1976 dollars).

the price required to maintain ROI for plants in compliance with State regulations. The additional capital requirements are considered reasonable.

6.3.3.6 Commercial Rice Drying

In 1967, more than 400 establishments solely engaged in drying and storage functions - no milling involved - were in operation. This number includes commercial as well as on-farm rice dryers. Approximately 219 of these establishments are commercial rice dryers located in Arkansas, Mississippi, Texas, Louisiana, and California. Any increase in rough rice production would require more rice drying facilities. Due to potential expansion in domestic rice production, as discussed in the previous section, growth potential exists for commercial rice drying.

Table 6-27 illustrates the financial impact of pollution controls on a model rice dryer. Case 1 represents the requirements for a rice dryer to comply with State regulations, in the absence of new source performance standards. Cases 2 through 4 represent the financial impact for alternative control levels analyzed for new source performance standards.

In comparing Cases 2 - 4 with Case 1, the percentage of control capital relative to total fixed assets increases from 3.3 percent to 6.0 percent for best controls without dryer vacuum-cleaned screen requirements. The screen filter requirement on dryers increases control capital to 8.7 percent. What is more important is revealed in the comparison of the annualized costs to profits before taxes, particularly with the understanding that any new commercial rice dryers are in competition with rice mills, as well as with existing commercial rice dryers in compliance with State regulations.

Table 6-27. Model Commercial Rice Dryer

Pre-Control Financial Data

Fixed Assets	$1,450,000
Total Assets	$2,100,000
Sales Revenue	$ 298,000[1]
Profit before Taxes	$ 75,400
Return on Total Assets (ROI)	3.6%

	Case 1 State Regulation	Case 2 Recommended Controls	Case 3 Best Controls (No Drying)	Case 4 Best Controls (Incl. Dryers)
Control Capital	$48,400	$79,300	$86,300	$126,200
Annualized Control Costs	$ 8,800	$16,700	$17,900	$ 26,600
Control Capital ÷ Fixed Assets	3.3%	5.5%	6.0%	8.7%
Annualized Costs ÷ Profit before Taxes	11.7%	22.1%	23.7%	35.3%
Price Increase to Maintain ROI	3.5%	6.6%	7.0%	10.4%

[1] Annual Throughput, 0.77 MM Bushels/yr.

Source for financial data: Midwest Research Institute (updated to 1976 dollars).

A closer examination of the model in Table 6-27 shows that the commercial rice dryer with recommended controls would have to increase its price by 1.2 cents per bushel (41.3¢/bu) relative to his competition in compliance with State regulations (40.1¢/bu). The new commercial rice dryer faces a problem both with direct competition from existing commercial rice dryers and his customers, the rice millers, who have the available option of purchasing the grain directly from rice farmers and performing their own drying and storage functions. In particular, new rice mills, which have to incur an incremental cost of 1 cent per bushel ($68,000 - $39,500, a difference between Case 1 and Case 2 shown in Table 6-26) more than their rice milling competitors, would be more reluctant to take the higher price the new commercial rice dryer needs to maintain profitability.

For Case 4, the financial impact for the commercial rice dryer gets worse. Annualized control costs as a percentage of profits before taxes are 35.3 percent versus only 11.7 percent for the source in compliance with the State regulation. The commercial rice dryer would find that this cost would definitely be unaffordable. Even the new rice mill confronted with best control technology and dryer screen requirement would find his drying costs approximately 1 cent per bushel less expensive than the commercial rice dryer (0.2 cent/bushel for dryer control from Table 6-19 versus 1.13 cents/bushel for dryer control from Table 6-27).

In view of the data presented in Table 6-20 and the previous discussion, it is doubtful that independent commercial rice dryers will be built

with the adoption of new source performance standards. These dryers which would be in direct competition with existing dryers and mills would find it extremely difficult to maintain historic profitability.

On the other hand, farm co-operatives and rice millers who would consider the rice drying function as a service function, not a profit venture, would still find it necessary to build dryers. The increased costs for handling and drying would be passed back to the rice farmer. Possible consequences of this action might be the encouragement of building larger dryers on the part of the co-operatives, more on-farm dryers (non-commercial), and more backward integration of mills into drying and storage.

6.3.4 Size Cut-Off Analysis (Elevators)

The purpose of this section is to develop the economic basis for exemption of a category of grain elevator facilities for which the recommended controls are inappropriate. In the rationale section, Chapter 8, the exemption for these facilities will be defined on the basis of size cut-off defined in terms of leg capacity (bushels per hour).

The economic analysis of controls in Section 6.3 was conducted on the basis of annual throughput as the most meaningful parameter for measurement of the impact of incremental control costs. The size cut-off then will be determined in this section in terms of annual throughput. This will then be translated in Chapter 8 into a size cut-off in terms of leg capacity.

The arguments underlying a size cut-off are two-fold. First, normal economics of scale on the capital cost of control systems suggest that such costs are higher on a unit basis for smaller facilities. In this regard, the smallest model in the economic analysis was the country elevator with an annual throughput of 1 million bushels. Second, minimum ventilation requirements are dictated by the physical dimensions of the unloading pits (for standard sized trucks) and loading facilities (for standard sized railroad cars). It is doubtful that the ventilation requirements for elevators can be reduced to any extent below those specified for the 1 million bushel per year country elevator.

In this analysis then, the total annualized costs for recommended controls for the 1 million bushel per year country elevator is the basis for calculating unit costs (¢ per bushel) for various elevator

sizes less than 1 million bushels per year throughput. The only element in these annualized costs that may vary with throughput is energy consumption, which constitutes a very minor fraction of the costs. Other costs -- capital charges, taxes, insurance, maintenance and labor -- are assumed to be constant. The curve for these costs is shown in Figure 6-1.

The approach taken for a size cut-off exemption is the use of a conventional breakeven analysis. This technique is used to circumvent those subjective judgments that would enter into a rate-of-return (ROI) type of analysis. The judgments would have to be made because - (1) the variation in pre-control profit margins for small elevators, (2) the extent to which the costs of State regulations have been passed on, or absorbed by, existing country elevators, and (3) the minimum ROI accepted by individual elevator operators - are all unknown. Therefore, the pre-control profit margin (2.1 ¢ per bushel) in the ADL analysis was arbitrarily chosen as the breakeven point for a shutdown decision for country elevators.

Referring to Figure 6-1, a horizontal line representing the 2.1 cent pre-control profit is drawn to intersect the aforementioned control cost curve. The intersection point, or the breakeven point, for this analysis occurs at 720,000 bushels per year. As an approximation for the purpose of regulatory decision, the value of 700,000 bushels per year throughput should be used.

Figure 6-1. Control Costs as a Function of Annual Throughput.

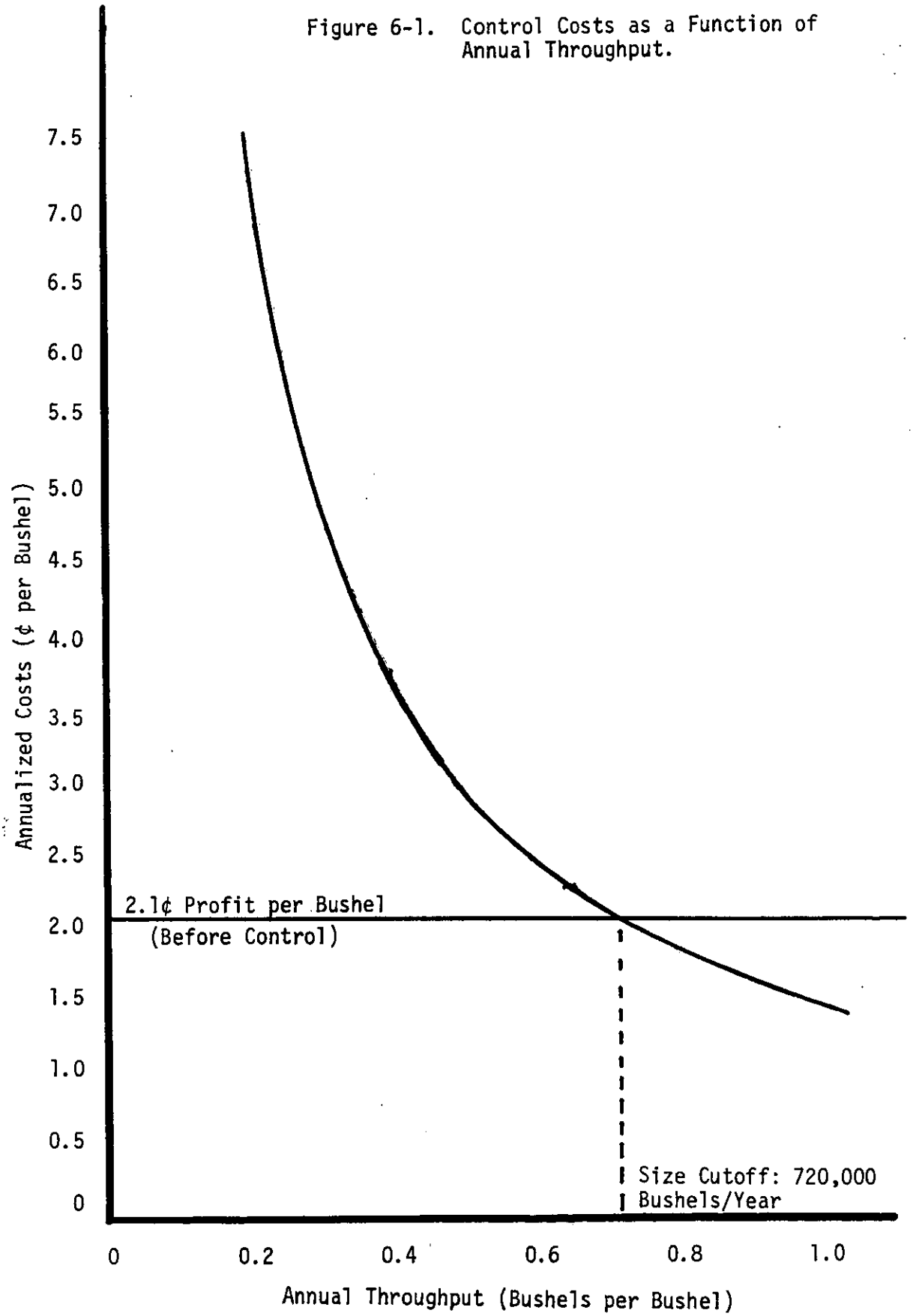

REFERENCES

1. "Economic Impact of Potential Pollution Abatement Costs on the Grain Elevator Industry and Selected Grain Processing Industries", prepared by Arthur D. Little, Inc., for the U.S. Environmental Protection Agency, Contract 68-02-1349, Task No. 3, April 1975, page 14.

2. Ibid., page 28.

3. Ibid, pg. 34.

4. Ibid, pg. 47.

5. Ibid., pg 47.

6. Ibid., pg. 52.

7. Ibid., pg. 53.

8. Ibid., pg. 94.

9. Ibid., pg. 245.

10. Ibid., pg. 276.

11. Ibid., pg. 254.

12. U.S. Department of Agriculture, Economic Reserach Service, An In-House paper.

13. Ibid., pp. 332-347; pp. 399-479.

14. ADL, op. cit., pp. 121-141.

15. Private communication: Letter from Leroy Funk of CEA-Carter-Day Company (Minneapolis) to F. L. Bunyard, OAQPS, EPA, March 17, 1975.

16. Private communication: Letter from F. L. Bunyard, OAQPS, EPA to Richard Noland, of H. C. Wiedenmann and Son, Inc. (Kansas City), March 7, 1975.

17. Private communication: Letter from Richard Noland, H. C. Wiedenmann and Son, Inc., to F. L. Bunyard, OAQPS, EPA, March 13,1975.

18. Trip report by Sims L. Roy, Jr. on Inspection of Cargill Port Terminal Elevator, Savage, Minnesota, February 4, 1976.

19. Private communication: Telephone call from F. L. Bunyard, OAQPS, EPA, to Don Enge, Department of Engineering, Cargill, Inc., March 2, 1976.

20. ADL, op. cit., pp. 55-56.

21. ADL, Revised Summary Report on Impact of New Source Performance Standards upon New and Modified Grain Elevators, Dryers, and Cleaners, October 1, 1975.

22. ADL, loc. cit., April 1975, pg. 78.

23. Ibid., pg. 75.

24. Private communication: Telephone conversation, F. L. Bunyard, OAQPS, EPA, to Phillip Kruzick, Winamac Construction Company, Winamac, Indiana, March 1976.

25. Private communication: Telephone conversation, F. L. Bunayrd, OAQPS, EPA to L. J. Allen, Sales Manager, Ruttmann Companies, Upper Sandusky, Ohio, March 1976.

26. ADL, loc. cit., October 1, 1975, pp. 224-225.

7. ENVIRONMENTAL EFFECTS

The purpose of this chapter is to identify, quantify and evaluate the positive and negative environmental impacts of the alternative control systems presented in Chapter 4 for grain elevators. Three alternative control systems have been evaluated. System 1 represents control to levels of typical state standards (no screen [filter] on column dryers, 20-30 mesh screen on rack dryers and 90% efficient cyclone control). System 2 represents control levels achieved with 99.9% efficient fabric filter control, no screen (filter) on column dryers and 50 or finer mesh vacuum-cleaned screen on rack dryers. System 3 represents control levels achieved with 99.9% efficient fabric filter control, vacuum-cleaned screens (filters) on column and rack dryers and total enclosure of the operations. These control systems are described in detail in Chapter 4. The impacts on total solid waste handling and disposal, noise and radiation, and energy requirements for the alternative systems are discussed. Both primary and secondary impacts are considered. Primary impacts are those directly attributable to each alternative control system. Secondary impacts are indirect or induced impacts which arise from the application of these systems. In general, by using one of the alternative control systems for the affected facilities at grain elevators, there will be beneficial primary impacts on ambient air quality and adverse impacts on solid waste handling and disposal and energy demand. No impacts on water treatment or supply are anticipated because dry type collectors are used in both alternative control systems. Impacts due to an increase in noise as a result

of the use of one of the alternative control systems are possible, but have not been quantified. The Agency assumes that any increases will be negligible when compared to existing levels. No adverse radiation impacts are anticipated as a result of the proposed standards.

A summary of the anticipated secondary environmental impacts associated with the alternative control systems is presented in Table 7-1. Impacts on air quality, water supply and treatment, solid waste disposal and energy consumption are identified. These impacts will be discussed in more detail later in this chapter.

7.1 AIR POLLUTION IMPACTS

7.1.1 Primary Impacts

The primary impacts that can be attributed to the use of the alternative control systems can be measured by the reduction in total mass emissions of particulate matter and by the reduction in the maximum predicted ambient air concentration due to these emissions. Grain elevators controlled to the levels specified by typical state standards were used as the baseline to which the impacts due to the proposed standards were compared. These emission values are summarized in Chapter 4 as Control System No. 1. Emission rates were then determined for facilities controlled with the alternative control systems.

7.1.1.1 Mass Emissions

The particulate matter mass emission levels were calculated in terms of pounds of particulate matter emitted per year for various model plants. The total annual particulate matter emissions for the

Table 7-1. ADVERSE SECONDARY ENVIRONMENTAL IMPACTS OF INDIVIDUAL CONTROL TECHNIQUES OVER SIP REQUIREMENTS

AFFECTED FACILITY	CONTROL SYSTEMS	INCREMENTAL ADVERSE SECONDARY ENVIRONMENTAL IMPACTS COMPARED TO STATE STANDARDS			
		AIR IMPACT	WATER IMPACT	SOLID WASTE IMPACT	ENERGY CONSUMPTION
TRUCK LOADING/UNLOADING	System 3	Increased Emissions From Power Plant	None	Minimal Handling and Disposal Problems	Increased Power Requirements
	System 2	Increased Emissions From Power Plant	None	Minimal Handling and Disposal Problems	Increased Power Requirements
RAILCAR UNLOADING	System 3 and System 2 are identical	Increased Emissions From Power Plant	None	Minimal Handling and Disposal Problems	Increased Power Requirements
BARGE AND SHIP UNLOADING	System 3 and System 2 are identical	Increased Emissions From Power Plant	None	Minimal Handling and Disposal Problems	Increased Power Requirements
GRAIN HANDLING	System 3 and System 2 are identical	Increased Emissions From Power Plant	None	Minimal Handling and Disposal Problems	Increased Power Requirements
GRAIN DRYING	System 3	Increased Emissions From Power Plant	None	Minimal Handling and Disposal Problems	Increased Power Requirements
	System 2	None	None	None	None
BOXCAR LOADING	System 3	Increased Emissions From Power Plant	None	Minimal Handling and Disposal Problems	Increased Power Requirements
	System 2	Increased Emissions From Power Plant	None	Minimal Handling and Disposal Problems	Increased Power Requirements
HOPPER CAR LOADING	System 3	Increased Emissions From Power Plant	None	Minimal Handling and Disposal Problems	Increased Power Requirements
	System 2	Increased Emissions From Power Plant	None	Minimal Handling and Disposal Problems	Increased Power Requirements
BARGE AND SHIP LOADING	System 3 and System 2 are identical	Increased Emissions From Power Plant	None	Minimal Handling and Disposal Problems	Increased Power Requirements

model plants resulting from the application of the alternative control systems previously discussed in this chapter and in Chapter 4, Emission Control Technology, are presented in Table 7-2.

Five types of elevators were used to represent grain elevators in calculating mass emissions and reductions and ambient concentrations because the grouped model plants are similar in emission characteristics. Country elevators and commercial rice dryers represent model elevators 1 and 2; the high through-put terminal elevator represents model elevators 3 and 4; the inland terminal elevator represents model 5 elevators; and port terminal elevators represent model 6 elevators. Only one type of elevator was used to represent all of the grain processors (except rice dryers) because these plants have similar operations and emission characteristics. The model elevators are described in detail in Chapter 6.

By combining the potential reductions for each facility, the total reductions attributable to the alternative control system and type of grain elevator can be determined. The incremental emission reduction of the various alternative control systems at model plants was compared to Alternative Control System 1. The incremental reductions in total mass emissions achievable are summarized in Table 7-3. Table 7-3 shows that the emission reduction of Alternative Control System 2 compared to System 1 ranges from 67 to 94% for the types of elevators, and Control System 3 compared to Control System 1 results in an emission reduction ranging from 86 to 96% for the types of elevators.

Table 7-2. GRAIN ELEVATOR EMISSIONS FOR MODEL ELEVATORS WITH ALTERNATIVE CONTROL SYSTEMS[1]

Facility & Through-put[a]	Process	Percent of Through-put	Particulate Emission Factors (lb/T)	Uncontrolled Emissions 1000 (lb/yr)	Percentage of Elevators Currently Using: No Control	Cyclones	Fabric Filters	Emissions With Current Control (lb/yr) (1971)	System 1 (lb/yr)	System 2 (lb/yr)	System 3 (lb/yr)
Country Elevator 1,000,000 bu/yr (Models 1, 2 and Rice Drvers)	Receiving Truck	100	.6	18	69	31	0	13,000	1,800	18	16
	Handling	100	3.5	105	45.5	54.5	0	53,550	10,500	105	195
	Turning (once/yr)	100	2.0	60	71	29	0	44,400	6,000	60	54
	Cleaning	8	5.0	12	27	60	0	3,960	1,200	12	11
	Drying	25	4.0	30	69	30	0	21,600	3,850	3,850	1,280
	Shipping										
	Truck	43	0.6	7.7	78	22	0	6,190	770	7.7	7
	Rail	44	.3	4				3,170	400	4	4
	Barge	13	1.2	5	100	0	0	4,680	500	5	5
	OVERALL		8.0	241.7	37 percent collection efficiency			150,000	25,020	4,061.7	1,472
High Through-put Elevator 3.5 million by/yr (Models 3 and 4)	Receiving										
	Truck	40	.6	25.2	41	40	19	11,340	2,520	25	23
	Rail	55	1.3	75.6				34,067	7,560	75.6	68
		5	1.7	1.1	100	0	0	8,913	110	1.1	1
	Handling	100	3.5	367.5	45	37	17	180,133	367.5•	367.5	331
	Turning	0									
	Cleaning	22	5	115.5	57	33	10	69,300	11,550	115	104
	Drying	10	4	42	60	29	11	28,000	7,700	7,700	2,567
	Shipping										
	Truck	17	.6	10.5	70	13	17	7,630	1,050	10.5	9.5
	Rail	48	.3	15				10,780	1,500	15	13.5
	Barge	35	1.2	44	100	0	0	44,100	4,400	44	39.6
	OVERALL		6.7	696.4	45 percent collection efficiency			394,263	36,759	8,354	3,155

Table 7-2. GRAIN ELEVATOR EMISSIONS FOR MODEL ELEVATORS WITH ALTERNATIVE CONTROL SYSTEMS (continued)

Facility & Through-put[a]	Process	Percent of Through-put	Particulate Emission Factors (lb/T)	Uncontrolled Emissions 1000 (lb/yr)	Percentage of Elevators Currently Using: No Control	Cyclones	Fabric Filters	Emissions With Current Control (lb/yr) (1971)	System 1 (lb/yr)	System 2 (lb/yr)	System 3 (lb/yr)
Inland Terminal 15,000,000 bu/yr (Model 5)	Receiving										
	Truck	40	.6	108	41	40	19	48,600	10,800	108	97
	Rail	55	1.3	324				146,000	32,400	324	292
	Barge	5	1.7	4.5	100	0	0	38,200	450	4.5	4
	Handling	100	3.5	1,575	45	37	17	772,000	1,570*	1,570	1,413
	Turning	0									
	Cleaning	22	5.0	495	57	33	10	297,000	49,500	495	446
	Drying	10	4.0	180	60	29	11	120,000	30,800	30,800	10,270
	Shipping										
	Truck	17	.6	45	70	13	17	32,700	4,500	45	41
	Rail	48	.3	64.8				46,200	6,480	65	59
	Barge	35	1.2	189	100	0	0	189,000	18,900	189	170
	OVERALL		6.7	2,985	45 percent collection efficiency			1,689,700	155,400	33,600	12,792
Port Terminal 40,000,000 bu/yr (Model 6)	Receiving										
	Truck	10	.6	72				19,500	7,200	72	65
	Rail	50	1.3	780	24	30	46	210,000	780*	780	702
	Barge	40	1.7	816				226,000	820*	820	734
	Handling	100	3.5	4,200	39	32	29	1,770,000	4,200*	4,200	3,780
	Turning	0									
	Cleaning	14.6	5.0	876	63	22	15	571,000	87,600	876	788
	Drying	1.0	4.0	48	38	44	18	23,000	7,700	7,700	2,570
	Shipping										
	Land	6	1.2	86	74	26	0	66,000	8,600		
	Ship	94	1.2	1,354				1,036,000	135,400	1,354	1,218
	OVERALL		6.8	8,232	53 percent collection efficiency			3,920,000	252,300	15,802	9,857

Table 7-2. GRAIN ELEVATOR EMISSIONS FOR MODEL ELEVATORS WITH ALTERNATIVE CONTROL SYSTEMS (continued)

Facility & Through-put[a]	Process	Percent of Through-put	Particulate Emission Factors (lb/T)	Uncontrolled Emissions 1000 (lb/yr)	Percentage of Elevators Currently Using: No Control	Cyclones	Fabric Filters	Emissions With Current Control (lb/yr) (1971)	System 1 (lb/yr)	System 2 (lb/yr)	System 3 (lb/yr)
Process Storage 3,000,000 bu/yr (wheat mill, dry corn mill, rice mill, soy-bean processor, wet corn mill)	Receiving Truck	50	.6	27	40	16	42	36,000	2,700	27	24
	Rail	50	1.3	58.5					5,850	58.5	53
	Handling	100	3.5	315	26	26	48	91,000	31,500	315	284
	Drying	10	4.0	36	0	0	50	19,000	19,230	19,230	6,410
	OVERALL		4.8	436.5	66 percent collection efficiency			146,000	59,280	19,630	6,771

*Typical state standard requires use of a fabric filter control device.
[a]Average volume of 33 bushels per ton assumed.

Table 7-3. ESTIMATED INCREMENTAL ANNUAL PARTICULATE MATTER EMISSION REDUCTION FOR MODEL PLANTS WITH ALTERNATIVE CONTROL SYSTEMS COMPARED TO EMISSIONS UNDER TYPICAL STATE REGULATIONS SYSTEM 1 (lb/yr)

	ALTERNATIVE CONTROL SYSTEMS	
	(% EMISSION REDUCTION) SYSTEM 2	(% EMISSION REDUCTION) SYSTEM 3
COUNTRY ELEVATOR (1 million bu/yr) (MODELS 1 & 2 & RICE DRYERS)	20,900 (84)	23,500 (94)
HIGH THROUGH-PUT ELEVATOR (3.5 million bu/yr) (MODELS 3 & 4)	28,400 (77)	33,600 (91)
INLAND TERMINAL ELEVATOR (15 million bu/yr) (MODEL 5)	121,800 (78)	142,600 (92)
PORT TERMINAL ELEVATOR (40 million bu/yr) (MODEL 6)	236,500 (94)	242,400 (96)
STORAGE ELEVATOR, PROCESSOR (3 million bu/yr) EXCLUDING RICE DRYERS	39,680 (67)	52,480 (86)

Taking into account the average number of new, modified, and reconstructed plants that are expected to be built or modified each year, the industry-wide reduction in particulate emissions can be calculated. The accumulated industry-wide particulate emissions reduction for various alternative control systems through 1980 are presented in Table 7-8.

7.1.1.2 Ambient Concentrations

For the purpose of evaluating the air pollution impacts associated with alternative control systems, studies were performed on model grain elevators. The models chosen were of average design and layout and include, in various combinations, the eight affected facilities controlled by the proposed standards. Meteorological modeling was performed for five types of grain elevators; these types of elevators are described in Section 7.1.1.1.

Maximum ground-level concentrations of particulate matter were determined for the emission rates corresponding to each control system and type of grain elevator.[2]

The dispersion estimates were made through application of the single source (CRSTER) model. The model generates estimated 1 hr, 24 hr and annual ground-level concentrations. The meteorological data used in the analysis were chosen to represent the climatology at grain elevator facilities located where effluent dispersion would be relatively poor. All meteorological data were from 1964. For all types of grain elevators except port terminals, the meteorological data were from National Weather Service Stations in the heart of the

grain belt. For the port facilities surface meteorological data from the Great Lakes, Gulf and Pacific Coast locations were considered and data from Houston, Texas, and Portland, Oregon were selected. Particulate matter concentrations were calculated for 24-hour and annual averages at distances of 0.3 km, 2 km and 20 km from the center of the elevator. The model assumes that all emissions are emitted over a horizontal area of approximately 100 x 250 meters.

A detailed description of the meteorological methodology and the stack heights and emission rates upon which these calculations are based is presented in Appendix D.

The results of the study that was performed to evaluate maximum ground-level concentrations due to emissions from grain elevators are presented in Table 7-4. With each type of plant and meteorological condition, the particulate concentration decreased predictably with decreases in emission rates and with distances away from the center of the elevator. It is evident from Table 7-4 that ambient particulate concentrations at elevators which use no control device far exceed the primary ambient air quality standards, especially at the shortest downwind distance for which concentrations were estimated (0.3 km, measured from the center of the facility). Large emission rates in combination with aerodynamic downwash of the effluents are responsible for the high ground-level concentrations.

Control to the level of Alternative Control System 1 (typical State standard) reduces the emissions significantly; however, the maximum 24-hour primary standard of 260 $\mu g/m^3$ is exceeded at a distance

Table 7-4. ESTIMATED MAXIMUM AMBIENT GROUND LEVEL PARTICULATE CONCENTRATION ($\mu g/m^3$)[2]

TYPE OF GRAIN ELEVATOR	LEVEL OF CONTROL None = None 1 = System 1 2 = System 2 3 = System 3	EMISSION RATE (g/sec)	AVERAGING TIME	ESTIMATED MAXIMUM AMBIENT GROUND LEVEL PARTICULATE CONCENTRATION ($\mu g/m^3$)* 0.3 Km	2 Km	20 Km
1. Country Elevator (Models 1, 2 and Rice Dryers)	None	19.7	24 hrs.	1000	100	10
			Annual	79	9	<1
	1	3.3	24 hrs.	150	17	2
			Annual	11	2	<1
	2	1.2	24 hrs.	65	6	<1
			Annual	5	<1	<1
	3	.55	24 hrs.	29	3	<1
			Annual	2	<1	<1
2. High Through-put Elevator (Models 3 and 4)	None	47.6	24 hrs.	>1000	250	23
			Annual	190	21	1
	1	4.68	24 hrs.	250	25	2
			Annual	19	2	<1
	2	2.31	24 hrs.	120	12	1
			Annual	9	1	<1
	3	1.02	24 hrs.	53	5	<1
			Annual	4	>1	<1
3. Inland Terminal Elevator (Model 5)	None	213.3	24 hrs.	>1000	>1000	100
			Annual	>300	94	5
	1	8.7	24 hrs.	390	46	4
			Annual	30	4	<1
	2	3.15	24 hrs.	140	17	2
			Annual	11	1	<1
	3	1.86	24 hrs.	70	10	<1
			Annual	6	<1	<1
4. Port Terminal Elevator (Model 6)	None	399.6	24 hrs.	>1000	>1000	140
			Annual	>300	180	8
	1	8.64	24 hrs.	340	34	3
			Annual	28	4	<1
	2	3.44	24 hrs.	140	14	1
			Annual	11	2	<1
	3	2.15	24 hrs.	62	9	<1
			Annual	6	<1	<1
5. Storage Elevator, Processors (Wheat mill, dry corn mill, rice mill, soybean processor, wet corn mill)	None	35.8	24 hrs.	>1000	190	17
			Annual	120	16	<1
	1	8.77	24 hrs.	330	47	4
			Annual	26	4	<1
	2	1.75	24 hrs.	81	10	<1
			Annual	6	<1	<1
	3	1.1	24 hrs.	41	6	<1
			Annual	3	<1	<1

NOTE: National primary ambient air quality standards for particulate matter are:
a. 75 micrograms per cubic meter - annual geometric mean.
b. 260 micrograms per cubic meter - maximum 24-hour concentration not to exceed more than once per year.
National secondary ambient air quality standards for particulate matter are:
a. 60 micrograms per cubic meter - annual geometric mean.
b. 150 micrograms per cubic meter - maximum 24-hour concentration not to exceed more than once per year.
*Distances measured from center of facility.

of 0.3 km from the center of the facility for the inland terminal elevator, port terminal elevator and storage elevator at processors. Control to the level of Alternative Control System 2 (proposed NSPS) does not cause the primary or secondary ambient air quality standard for particulate matter to be exceeded at any distance. Control to the level of Alternative Control System 3 (best control technology not considering cost) will reduce the maximum ambient particulate concentrations below that resulting from the use of System 2. The individual control techniques that comprise the alternative control systems are described in Chapter 4. Compared to the maximum ambient particulate matter concentration that results from control to typical state standard levels, Alternative System 2 results in a reduction of the 0.3 km distance 24-hour average by 52 to 76 percent for the various model plants and Control System 3 level results in a reduction ranging from 78 to 88 percent. Control Systems 2 and 3 both reduce the maximum ambient air concentrations significantly.

7.1.2 Secondary Air Impacts

Secondary impacts on air quality will arise as a result of the electrical requirements of certain control techniques that are used to control grain elevator emissions. Additional emissions of particulate matter, NO_x and SO_2 from the coal-fired power plant supplying the electrical energy can be anticipated. Based on the new source performance standards for coal-fired power plants, promulgated in the Federal Register on December 23, 1971 (36 FR 24876), the additional emissions can be estimated at 0.1 lb of particulate matter,

0.7 lb of NO_x and 1.2 lb of SO_2 per 10^6 Btu produced. The amount of additional pollutant emissions therefore are small when compared with the large reductions in particulate matter emissions achieved by implementation of the proposed control systems.

7.2 WATER POLLUTION IMPACT

No liquid wastes will require treatment or disposal as a result of the implementation of any of the alternative control systems because all alternatives involve only dry type particulate matter collection devices.

7.3 SOLID WASTE IMPACT

The additional particulate matter collected as a result of the implementation of the proposed standard is expected to create minimal adverse solid waste impacts. It is estimated that currently 68 percent of the particulate matter collected by emission control devices at elevators is returned to the grain, 30 percent is sold for use in feed manufacturing, and 2 percent is disposed of as solid waste. The additional particulate matter collected by a more efficient control device would either be sold for feed or landfilled.

Elevator operators prefer to return the particulate matter to the grain to minimize the difference between the amount of grain purchased and sold (shrink). However, there is an economic limitation to the amount of particulate matter that can be recycled, since it degrades the quality of the grain.

There is good potential for the increased use of particulate matter from grain in feed production, according to the United States Department of Agriculture and feed manufacturers. Cattle feeds must contain about 7 percent roughage which can be supplied by hay, straw, grasses, corn cobs or particulate matter from grain. An added advantage of using this particulate matter is that it may contain as much as 18 percent protein. The market for any one elevator, however, is dependent upon its location relative to feed manufacturers and other sources of roughage. Transportation costs are high; therefore, it is not profitable to transport the particulate matter very far. The value of the particulate matter also fluctuates with grain prices.

Approximately 2 percent of the collected particulate matter is expected to be disposed of at sanitary landfills.[2] This amounts to about .13 pound per ton of grain. When compared to the amount of particulate matter that must be disposed of at elevators controlled to meet State regulations, there is a small adverse solid waste impact with Systems 2 and 3. Compared to an uncontrolled elevator, however, there is a beneficial impact. This occurs because some of the large particles emitted from the operations at a completely uncontrolled elevator will settle inside the building and on the property. This particulate matter, which amounts to about 10 percent of the uncontrolled particulate emissions or about 0.7 pound per ton of grain, must then be cleaned up and disposed of. Table 7-5 shows the weight and volume of particulate matter that must be disposed of by a typical

Table 7-5. SOLID WASTE DISPOSAL WITH ALTERNATIVE CONTROL SYSTEMS

Facility and Through-put	Uncontrolled[a] Elevator		System 1[c]		System 2[c]		System 3[c]	
	lb/yr	ft^3/yr[b]	lb/yr	ft^3/yr[b]	lb/yr	ft^3/yr[b]	lb/yr	ft^3/yr[b]
COUNTRY ELEVATOR 1 million bu/yr (MODELS 1, 2 AND RICE DRYERS)	24,000	1,200	4,334	217	4,753	238	4,805	240
HIGH THROUHG-PUT ELEVATOR 3.5 million bu/yr (MODELS 3 AND 4)	69,640	3,480	13,190	660	13,760	690	13,860	690
INLAND TERMINAL 15 million bu/yr (MODEL 5)	298,500	14,930	56,590	2,830	59,030	2,950	59,440	2,970
PORT TERMINAL 40 million bu/yr (MODEL 6)	823,200	41,160	159,590	7,980	164,340	8,220	164,440	8,220
PROCESS STORAGE 3 million bu/yr (WHEAT MILL, DRY CORN MILL, RICE MILL, SOYBEAN PROCESSOR, WET CORN MILL)	43,650	2,180	7,540	380	8,340	420	8,590	430

(a) Assumes 10 percent of uncontrolled particulate emissions settle on property and are disposed of.
(b) Assumes a particulate matter density of 20 lbs/ft^3.
(c) Assumes 2 percent of collected material is disposed of.

size elevator. The particulate matter has a bulk density of about 20 pounds per cubic foot.[3] Compared to the amount of waste disposed of at a landfill for an elevator controlled to levels of Alternative Control System 1, the additional solid waste that must be disposed of by control to levels of Systems 2 and 3 ranges from 3 to 10 percent depending on the model plant. The amount of solid waste generated by Systems 2 and 3 are approximately the same.

7.4 NOISE AND RADIATION IMPACT

The control devices and exhaust fans at grain elevators are usually located outside of buildings at either roof or ground level. Although fans are noisy, they are already required for collection systems now used to meet existing state regulations. Therefore, any Federal standard will not introduce new noise problems but may increase the existing noise levels if larger equipment is required. This is considered to be negligible.

There are no known or anticipated radiation impacts at grain elevators.

7.5 ENERGY IMPACTS

Energy requirements for systems to control air pollution at grain elevators are proportional to the volume of air that must be moved, the pressure drop of the systems, and the "on-stream time" or amount of time each system operates.

Table 7-6 presents an estimate of the energy required to operate model elevators of a typical size and the energy required to operate alternative control systems at these elevators. The energy required to operate a high efficiency cyclone collector is estimated to be 80% of the energy required to operate a fabric filter control

Table 7-6. CALCULATED ENERGY REQUIREMENTS TO OPERATE ALTERNATIVE CONTROL SYSTEMS[3]

Facility and Process	Operating Time (hr/yr)	Process Energy Required to Operate Elevator (KWH/yr)	Air Volume Through Control System (scfm)	Pressure Drop of System (inches H_2O)			Energy Required for Control System (KWH/yr)			Percent Increase In Energy Required Due to Control System (%)		
				System 1	System 2	System 3	System 1	System 2	System 3	System 1	System 2	System 3
Country Elevator (1 million bu/yr)												
Receiving and Shipping	1,000	12,500	12,250	8	10	10	24,000	30,000	30,000			
Handling	2,000	132,000	3,000	8	10	10	8,000	10,000	10,000			
Dryer	500	50,000	30,000	-	-	.5	-	-	2,000			
Aeration	1,000	62,000	-	-	-	-	-	-	-			
		256,000					32,000	40,000	42,000	12.5	15.6	16.4
High Through-put Terminal (3.5 million bu/yr)		896,000					112,000	140,000	147,000	12.5	15.6	16.4
Inland Terminal (15 million bu/yr)												
Receiving												
Truck	1,000	87,000	12,250	9.6	12	12	24,000	30,000	30,000			
Rail	500	-	15,000	9.6	12	12	16,000	20,000	20,000			
Shipping												
Boxcar	200	-	10,000	9.6	12	12	4,800	6,000	6,000			
Hopper Car	300	-	10,000	9.6	12	12	6,400	8,000	8,000			
Cleaning	500	12,500	10,000	9.6	12	12	8,000	10,000	10,000			
Dryer	2,200	400,000	10,000	-	-	.5	-	-	2,500			
Scale and Surge Bins	1,000	-	20,000	9.6	12	12	60,000	60,000	60,000			
Handling	2,500	1,500,000	45,000	20	20	20	500,000	500,000	500,000			
Aeration	1,200	750,000	-	-	-	-	-	-	-			
		2,750,000					619,200	634,000	636,500	22.5	23	23.1

*Assumed proportional to grain through-put of country elevator.

Table 7-6. CALCULATED ENERGY REQUIREMENTS TO OPERATE ALTERNATIVE CONTROL SYSTEMS (continued)

Facility and Process	Operating Time (hr/yr)	Process Energy Required to Operate Elevator KWH/yr	Air Volume Through Control System (scfm)	Pressure Drop of System (inches H_2O)			Energy Required for Control System (KWH/yr)			Percent Increase In Energy Required Due to Control System (%)		
				System 1	System 2	System 3	System 1	System 2	System 3	System 1	System 2	System 3
Port Terminal												
Receiving												
Truck	500	75,000	12,250	12	12	12	20,000	20,000	20,000			
Rail	1,000	12,500	25,000	9.6	12	12	56,000	70,000	70,000			
Barge	300	47,000	15,000	9.6	12	12	8,000	10,000	10,000			
Rail Loading	100	-	10,000	9.6	12	12	2,400	3,000	3,000			
Cleaning	350	17,500	20,000	9.6	12	12	16,000	20,000	20,000			
Drying	500	100,000	60,000	-	-	.5	-	-	3,000			
Scale and Surge Bins	1,500	-	20,000	9.6	12	12	64,000	80,000	80,000			
Handling	2,500	2,750,000	45,000	20	20	20	500,000	500,000	500,000			
Ship Loading	1,000	180,000	20,000	9.6	12	12	48,000	60,000	60,000			
Aeration	1,200	750,000	-	-	-	-	-	-	-			
		3,930,000					714,400	763,000	766,000	18.2	19.4	19.5
Process Storage												
Receiving												
Truck	2,500	220,000	12,250	9.6	12	12	72,000	90,000	90,000			
Rail	2,500		25,000	9.6	12	12	160,000	200,000	200,000			
Handling	6,000	3,600,000	25,000	16	20	20	560,000	700,000	700,000			
Scale and Surge Bins	2,500	-	10,000	8	10	10	48,000	60,000	60,000			
Drying	500	100,000	30,000	-	-	.5	-	-	2,000			
		3,900,000					840,000	1,050,000	1,052,000	21.5	26.9	27

device because of a lower pressure drop through the cyclone collector.[3] As can be seen from Table 7-6, the controls required by the typical state standard require an energy consumption ranging from 12.5 percent to 22.5 percent of the process energy required without air pollution controls. The more stringent control required by Systems 2 and 3 increases the power requirements by a maximum of 5.5% over state requirements.

Table 7-7 presents the total and incremental energy requirements for model plants with alternative controls. The number of new, modified, and reconstructed plants that are estimated to be built and modified by 1981 are also presented in the table.

As can be expected, fewer new, modified, or reconstructed plants are expected to be built with the imposition of more stringent control systems. For example, a total of 529 facilities are expected to be built or modified with Alternative Control System 1, 501 with System 2, and 470 with System 3. To make yearly estimates of energy consumption, it was assumed that these new, modified, and reconstructed facilities would be built or modified uniformly during the five-year period. The energy values in Table 7-7 represent the estimated energy that would have to be delivered to a power plant to generate the appropriate electrical requirement to operate the control systems. The incremental energy requirement over typical state standard requirements by 1981 is estimated to be approximately 17,000 bbl of No. 6 fuel oil for System 2, and about 19,000 bbl of No. 6 fuel oil for System 3. The larger energy requirement for System 2 over System 1 results from the use of fabric filters compared to cyclones. The larger energy requirement of System 3 over System 2 is due to control of grain dryers which

Table 7-7. TOTAL AND INCREMENTAL POLLUTION CONTROL SYSTEM ENERGY REQUIREMENTS FOR MODEL PLANTS WITH ALTERNATIVE CONTROL SYSTEMS*

Year	Control System 1 = System 1 2 = System 2 3 = System 3	Country Elevator (Models 1 and 2 and Rice Dryers)		High Through-put Elevator (Models 3 and 4)		Inland Terminal (Model 5)		Port Terminal (Model 6)		Process Storage Elevator (Processors)		Total Energy
		No.	(10^9 Btu/yr)	No.	(10^9 Btu/yr)	No.	(10^9 Btu/yr)	No.	(10^9 Btu/yr)	No.	(10^9 Btu/yr)	(10^9 Btu/yr)
1976	1	51	16.71	49	56.20	2	12.68	1	7.30	2	17.20	110.09
	2	45	18.43	49	70.24	2	12.98	1	7.81	2	21.50	130.96
	3	39	16.77	49	73.74	2	13.03	1	7.85	2	21.54	132.93
1977	1	51	16.71	49	56.20	2	12.68	1	7.30	2	17.20	110.09
	2	45	18.43	49	70.24	2	12.98	1	7.81	2	21.50	130.96
	3	39	16.77	49	73.74	2	13.03	1	7.85	2	21.54	132.93
1978	1	51	16.71	49	56.20	2	12.68	1	7.30	2	17.20	110.09
	2	45	18.43	49	70.24	2	12.98	1	7.82	2	21.50	130.97
	3	39	16.77	49	73.74	2	13.03	1	7.87	2	21.54	132.95
1979	1	51	16.71	49	56.20	3	19.02	1	7.32	3	25.80	125.05
	2	46	18.84	49	70.24	3	19.47	1	7.82	3	32.25	148.62
	3	39	16.77	49	73.74	3	19.55	1	7.87	3	32.31	150.24
1980	1	51	16.71	49	56.20	3	19.02	1	7.34	3	25.80	125.07
	2	46	18.84	49	70.24	3	19.47	1	7.82	3	32.25	148.62
	3	40	17.2	49	73.74	3	19.55	1	7.87	3	32.32	150.67
Sub-Total	1	255	83.54	245	280.99	12	76.08	5	36.57	12	103.21	580.39
	2	227	92.98	245	351.18	12	77.90	5	39.06	12	129.01	690.13
	3	196	84.28	245	368.75	12	78.21	5	39.22	12	129.26	699.72

Incremental energy compared to Control System 1:

	(10^9 Btu/yr)	(bbl of #6 oil/yr)
System 2	109.74	17,260
System 3	119.33	18,770

*All energy is based on fuel delivered to a power plant to generate the electrical requirement for control systems.

results in slightly higher energy consumption.

7.6 OTHER ENVIRONMENTAL CONCERNS

7.6.1 Irreversible and Irretrievable Commitment of Resources

The standards of performance will require the installation of additional equipment over that now required by State standards. This will require the additional use of some resources such as steel and building materials. This commitment of resources is small compared to the national usage of each resource. Some portion of these resources will ultimately be salvaged and recycled. There are not expected to be significant amounts of land resources required to install control equipment. Typical State standards already require some type of control equipment and most of these are located on buildings and, if not, require a relatively small amount of space. Therefore, the commitment of land resources for siting additional control devices is expected to be minor.

The proposed standards of performance will require the increased usage of energy, which is a scarce resource, to operate emission control devices. This energy will not be retrievable but will result in the control of significant quantities of particulate matter.

7.6.2 Environmental Impact of Delayed Standards

The environmental impact of delaying the standard on grain elevators will have major adverse environmental effects on emissions of particulate matter to the atmosphere and minor beneficial impacts on solid waste disposal and energy usage. There is no new technology that is being developed for the sources that are proposed to be regulated which would drastically reduce emissions from the levels

of best technology considering costs that are currently available. If the standard were delayed for one year, it would result in emissions of 3 to 3.5 million pounds of particulate matter that would have been collected by Alternative Control Systems 2 or 3, respectively. Therefore, there appears to be no valid reasons to delay proposal of the grain elevator standard.

7.6.3 Environmental Impact of No Standard

Based on the potential emissions of particulate matter and on the growth projections presented in Chapter 8, the adverse environmental impact of no standard is summarized in Table 7-8. This table shows that 46 to 53 million pounds of particulate matter would be emitted in a five-year period if no standard were proposed. Since there are only minor adverse solid waste impacts, and only minor energy consumption impacts associated with each of the alternative emission control systems which could serve as a basis for the standards, not setting standards presents little trade-off of potentially adverse impacts in these areas against the resulting adverse impact on air quality.

Table 7-8. ENVIRONMENTAL IMPACT OF NO STANDARD

Year	Control System 1 = System 1 2 = System 2 3 = System 3	Country Elevator (Models 1 and 2 and Rice Dryers) No.	Country Elevator Cumulative Emissions of Particulate Matter (10^3 lb/yr)	High Through-put Terminal (Models 3 and 4) No.	High Through-put Terminal Cumulative Emissions of Particulate Matter (10^3 lb/yr)	Inland Terminal (Model 5) No.	Inland Terminal Cumulative Emissions of Particulate Matter (10^3 lb/yr)	Port Terminal (Model 6) No.	Port Terminal Cumulative Emissions of Particulate Matter (10^3 lb/yr)	Grain Processor (Processors) No.	Grain Processor Cumulative Emissions of Particulate Matter (10^3 lb/yr)	Total Cumulative Particulate Emissions (10^3 lb/yr)	Total Emission Reduction Compared to System 1 (10^3 lb/yr)
1976	1	51	1,275	49	1,803.2	2	310.8	1	252.3	2	118.6	3,759.9	
	2	45	184.5	49	411.6	2	67.2	1	15.8	2	39.2	718.3	3,041.6
	3	39	58.5	49	156.8	2	25.6	1	9.9	2	13.6	264.4	3,495.5
1977	1	102	2,550	98	3,606.4	4	621.6	2	504.6	4	237.2	11,279.7	
	2	90	369	98	823.2	4	134.4	2	31.6	4	78.4	2,154.8	9,124.8
	3	78	117	98	313.6	4	51.2	2	19.8	4	27.2	793.2	10,486.5
1978	1	153	3,825	147	5,409.6	6	932.4	3	756.9	6	355.8	22,559.4	
	2	135	553.5	147	1,234.8	6	201.6	3	47.4	6	117.6	4,309.8	18,249.6
	3	117	175.5	147	470.4	6	76.8	3	29.7	6	40.8	1,586.4	20,973
1979	1	204	5,100	196	7,212.8	9	1,398.6	4	1,009.2	9	533.6	37,813.6	
	2	181	742.1	196	1,646.4	9	302.4	4	63.2	9	176.4	7,240.3	30,573.3
	3	156	234	196	627.2	9	115.2	4	39.6	9	61.2	2,663.6	35,150
1980	1	255	6,375	245	9,016	12	1,864.8	5	1,261.5	12	711.4	57,042.3	
	2	227	930.7	245	2,058	12	403.2	5	79.0	12	235.2	10,964.4	46,095.9
	3	196	294	245	784	12	153.6	5	49.5	12	81.6	4,026.3	53,016

REFERENCES

1. "Emission Control in the Grain and Feed Industry, Volume I - Engineering and Cost Study," by Midwest Research Institute for the U.S. Environmental Protection Agency, EPA-450/3-73-003a, December 1973.

2. "Methodology for Estimating the Impact of Grain Elevator Emissions on Air Quality," memorandum from Larry Budney, Source-Receptor Analysis Branch, to Stanley T. Cuffe, Chief, Industrial Studies Branch, November 1974.

3. Woodard, Kenneth R., memorandum to James C. Berry, Chief, Standards Support Criteria Pollutants Section, Industrial Studies Branch, Subject: Telephone Calls to Determine Solid Waste Disposal and Energy Requirements at Grain Elevators, January 1975.

8. RATIONALE FOR THE PROPOSED STANDARDS

8.1 SELECTION OF SOURCE FOR CONTROL

Grain elevators contribute significantly to national emissions of particulate matter. It is estimated that the grain elevator industry emits 606,000 tons of particulate matter each year. Approximately 7900 grain elevators are located nationwide. Of this amount it is estimated that there are about 6800 country elevators, 500 terminal elevators and 600 storage elevators at grain processing plants (see Table 2-2). Although grain elevators are located throughout the United States, the major concentration is in the grain-producing states in the Mid-Plains, South Plains and Great Lakes regions. Approximately 87 percent of the country elevators are located in areas with less than 100,000 inhabitants. Terminal elevators are located in the principal grain-marketing centers, most of which are in metropolitan areas. There is a trend, however, for terminal elevators to be built in more rural areas. Grain processing facilities for wheat, corn, and rice mills; soybean processing plants; and wet corn mills are located in both rural and urban areas.

Growth in the grain elevator and grain processing industries is expected to be slow since the per capita consumption of grain products is remaining constant or decreasing. The total number of grain elevators is expected to decrease; however, the total through-put of grain is expected to increase slightly. The trend is to larger through-put elevators, with low storage capacity and high handling capacity. Of the processing plants, only soybean processors have significant incentive to invest in new storage capacity.

Soybean production in the United States has increased over 20 fold, from 70,000 to 1.567 million bushels, in less than 35 years. Soybeans are an increasingly important source of protein for human and animal consumption; and soybean oil is used in foods, cosmetics, paints and plastics. In the five-year period between 1976 and 1981, approximately 530 grain elevators are expected to be built, modified or reconstructed. Even though the total growth in the industry will be slow, the number of new, modified, or reconstructed facilities will average approximately 100/year, which is considered to be significant.

In a study performed by The Research Corporation of New England (October 24, 1975), significant sources of particulate matter were identified and ranked in order of total emissions. Four grain handling operations were shown to be significant sources of particulate; processing was ranked fifth, transfer was ranked seventh, cleaning and screening was ranked tenth, and drying was ranked number thirty-three. Also, the Committee on Public Works of the U. S. Senate listed grain elevators as a source for which standards should be developed.

Particulate matter concentrations due to emissions of particulate matter from poorly controlled grain elevators have been measured with a high volume sampler and found to be nearly 240 $\mu g/m^3$ in the immediate vicinity of grain handling plants. This is discussed further in Chapters 2 and 7. Health-related effects on humans have been documented at ambient concentrations of particulate matter greater than 100 $\mu g/m^3$. Under section 109 of the Clean Air Act,

particulate matter has been designated as a criteria pollutant, and National Ambient Air Quality Standards have been set for particulate matter.

EPA has determined that particulate emissions from grain elevators contribute significantly to air pollution which causes or contributes to the endangerment of the public health. For this reason, the source category of grain elevators has been selected for emission control.

8.2 SELECTION OF POLLUTANTS AND AFFECTED FACILITIES

Large quantities of particulate matter, which result from handling grain, are emitted from grain elevators. This particulate matter consists of dirt from the field, pieces of grain kernels, spores of smuts and molds, insect debris, fungi and pollens. The only combustion process at a grain elevator is the grain dryer and a very small amount of NO_x and SO_2 may be emitted from this process. These pollutants are not considered to be significant in the amounts emitted from a grain dryer. Particulate matter is the only significant pollutant at a grain elevator and is the pollutant that is proposed to be regulated.

Farm elevators, country elevators, terminal elevators and commercial rice dryers which handle wheat, corn, soybeans, milo, rice, rye, oats, or barley and storage elevators at wheat flour mills, wet corn mills, dry corn mills (human consumption), rice mills, and soybean oil extraction plants were determined to be the most significant sources of particulate matter emissions in the grain handling industry. Particulate emissions from these sources are proposed to be regulated.

The grain handling and storage facilities at the specified grain processing industries were chosen because these industries handle a large portion of the grains that are processed and are considered to be significant sources of particulate matter.

Animal, pet food and cereal manufacturers; breweries; and feed lots also process whole grain. These industries were beyond the scope of the background industry studies. Consequently, no data are available on these sources and they are not subject to the proposed standards. In addition, there are relatively few plants in these peripheral industries.

The proposed standards would apply to affected facilities that handle wheat, corn, soybeans, milo, rice, rye, oats, or barley. These grains were selected to be subject to the standards because they are the primary grains produced in the United States. There are several other grains (e.g., millet), but these crops are grown and handled in small quantities. Therefore, the handling of these grains is not considered a significant source of particulate matter at this time.

Grain elevators are used to handle wheat, corn, soybeans, milo, rice, rye, oats, and barley. Uncontrolled emissions vary with the type and mixture of grain handled. It has been shown that uncontrolled emissions are lowest when wheat is handled. Particulate emissions are three times higher when handling soybeans and two times higher when handling milo, as compared to handling wheat. Emissions from corn are about equal to those from wheat. The processes controlled with fabric filters

that were tested during this study handled corn, wheat, soybeans, and milo. The test results do not indicate that the type of grain affected emissions from the fabric filters. In EPA's judgment, the same emission levels can be maintained when handling rice, rye, oats or barley when the best systems of emission reduction (considering costs) are used.

The minimum size of farm elevators, country elevators, terminal elevators and commercial rice dryers to which the proposed standards apply was based on economics. The fixed costs (capital charges) for control equipment needed to comply with the proposed standards do not change for any country elevator below a through-put of one million bushels/year. Since most country elevators are in areas where there is competition with other elevators, there is a limit to the cost that can be passed back to the farmers. The cost cannot be passed forward to the larger terminal elevators. Therefore, there is also a limit to the amount that can be either absorbed by the operator or passed back to the farmer. The maximum amount estimated that could be absorbed by a country elevator was $.021 per bushel. Since the control costs are essentially fixed for elevators smaller than 1 million bu/yr, the control cost per bushel varies inversely with the amount of grain handled.

An economic analysis showed that the minimum size country elevator that could afford to install control equipment to meet the proposed standards was one that handled an annual through-put of 700,000 bu/yr. All terminal elevators will be above this minimum through-put level, and most of the farm elevators will be

below this level. Since there was a possibility that some farm elevators will be large, it was decided that those large farm elevators should be controlled.

There are several problems associated with using this type of cut-off level: (1) It would be difficult to determine the projected through-put of new or modified elevators, (2) this through-put level could vary from year to year depending on whether the crop was good or bad or whether there was more than one crop harvested per year in a location (e.g. two wheat seasons). The advantage of determining a cut-off in terms of annual through-put is that this parameter is most relevant in an economic analysis.

Recognizing the potential problem of determining the applicability, another alternative cut-off level based on installed equipment was considered. The storage capacity at an elevator and the leg capacity were investigated. Both would accomplish the objective of more definitely determining the applicability of new, modified, or reconstructed elevators. The leg capacity was selected because it was more clearly related to the through-put than was storage capacity. Several firms which construct country elevators were consulted to determine what leg capacity would be installed at country elevators which have a through-put of 700,000 bu/yr. All stated that a leg capacity of approximately 10,000 bu/hr would be installed at such a country elevator; therefore, the standards will apply to farm, country, or terminal elevators that have a leg capacity in excess of 352 m^3/h (ca. 10,000 bu/hr). Since commercial rice dryers have economics similar to country elevators these are also included under the cut-off level exemption. The advantage of this cut-off level is that applicability of

the proposed standards to a new, modified, or reconstructed elevator could be easily determined. However, due to variations in operation hours, a disadvantage would be that an elevator that installs a 10,000 bu/hr leg may handle less than 700,000 bu/yr and therefore find it uneconomical to install control devices to meet the levels of the proposed standards.

The proposed standards apply to all sizes of processing plants that are covered by the standards, except commercial rice dryers, because the required control costs are affordable for these plants.

At farm, country, and terminal elevators and at the grain handling and storage facilities at processing plants, the only source of particulate matter emissions is from a combination of the following grain operations: truck unloading, railroad hopper car and boxcar unloading, barge and ship unloading, grain handling, grain drying, truck loading, railroad hopper car and boxcar loading, and barge and ship loading. All of these sources of particulate matter emissions could be significant sources of emissions if uncontrolled; therefore, the proposed standards regulate particulate matter emissions from each of these sources.

Consideration was given to classifying an entire grain elevator, including all its various functions, as the affected facility. If this were done, however, modification or reconstruction of a substantial portion of an existing grain elevator would make the entire elevator subject to the proposed standards. Since this

is not considered reasonable, the operations at grain elevators were classified into eight affected facilities. The affected facilities are: each truck unloading station, each railroad boxcar and hopper car unloading station, equipment at each barge and ship unloading station, all grain handling operations (which include conveyors, headhouse and other such structures, legs, scalpers, cleaners, turn heads, trippers, scales and surge bins), each grain dryer, each truck loading station, each railroad hopper car and boxcar loading station, and each barge and ship loading station. There are several advantages to naming the separate operations as affected facilities. For example, unloading stations and loading stations are often physically separated from other parts of the elevator and often have separate capture systems and air pollution control devices. Modification or reconstruction of one of these facilities will make it, but not the whole elevator, subject to the proposed standards. This is desirable because there can be an increase in the unloading or loading capacities without affecting other facilities at the elevator.

Grain handling operations are grouped as one affected facility since they have similar operating capacities; and common air pollution control devices frequently serve several pieces of handling equipment. Modification of one part of the grain handling system will usually require modification of other parts in the system; therefore, the whole system would be subject to the proposed standards.

8.3 SELECTION OF BEST SYSTEM OF EMISSION REDUCTION CONSIDERING COSTS

The purpose of the proposed standards is to require that best demonstrated emission control technology, considering costs, for particulate matter be installed and operated at new, modified, and reconstructed grain elevators. The proposed standards would ensure particulate containment and pickup at the location of dust generation, as well as proper operation and maintenance of air pollution control devices. The individual emission sources to be controlled include, as discussed in Section 8.2, all sources of fugitive emissions generated by process equipment and process exhaust gas streams at grain elevators which are significant sources of particulate matter.

The development of the proposed standards for these emission sources at grain elevators relied largely on results of a previous investigation of air pollutant emissions and control techniques in the grain and feed industry sponsored by EPA. This earlier study includes the responses from 509 owners or operators of elevators throughout the country to a questionnaire on the air pollution aspects of their operations. The proposed standards are also based on data concerning emission control systems and methods of process operation received through on-site observations of plant operations and control systems, consultation with industry representatives and manufacturers of control systems and devices, emission tests conducted by EPA and operators of grain elevators, and meetings with industry associations and the National Air Pollution Control Techniques Advisory Committee.

The selection of the best demonstrated system of emission reduction (considering costs) for new, modified, and reconstructed grain elevators is based on evaluating the incremental impacts (compared to State standards) of alternative control systems on air emissions, energy usage, water pollution, solid waste pollution, noise pollution and pollution control costs. The first step is the selection of the most effective methods for reducing air emissions from each affected facility. These methods are then compared, considering all environmental impacts and costs, to determine the best demonstrated emission reduction method, considering costs, for each affected facility. The best demonstrated system to control particulate matter from an entire grain elevator is an assimilation of the best emission reduction methods for each affected facility, with consideration given to total costs and economic impact for all the affected facilities. The costs and environmental impacts for an entire elevator were considered and EPA found them to be reasonable as discussed in Chapter 6 of this document.

8.3.1 Grain Dryers

There are two basic types of grain dryers, rack and column. Grain enters the top of both types, flows downward through the structure and exits via conveyors at the bottom. Heated air blown through the grain evaporates the excess moisture. Particulate matter and chaff can become entrained in the air and carried from the dryer. The quantity of particulate emissions is largely dependent on the type (rack or column) of dryer. Uncontrolled column dryers have much lower emissions than uncontrolled rack dryers by virtue of their design. In a column dryer the grain flows in a continuous

packed column between two perforated metal sheets, and most of the particulate matter is trapped within the grain rather than being emitted through the side of the column and into the atmosphere. A rack dryer contains baffles or racks around which the grain and hot air must flow and mix. This creates a cascading motion of grain flow through the air stream, resulting in greater entrainment of grain dust (particulate matter) than in a column dryer.

The current trend in the grain elevator industry is the installation of column dryers instead of rack dryers at country elevators, and this trend is expected to continue. The trend has developed primarily because typical State standards require that rack dryers be operated with a 20 to 30 mesh screen for air pollution control, whereas no air pollution control device is usually required for column dryers. This gives a significant capital cost advantage to the column dryer. EPA believes the majority of new, modified, or reconstructed dryers will be column dryers; however, new rack dryers may be installed in high through-put elevators because maintenance costs appear to be less for rack dryers in these applications.

Emissions from grain dryers are discharged from an exhaust area that is usually very large. Therefore, it is not technologically or economically feasible to apply the usual particulate source test methods designed for measuring stack emissions to this source. Several attempts to carry out source tests were made by EPA and by operators of grain elevators. The data collected, however, can only be used as a guide in developing a standard due to the numerous difficulties encountered in the measurement technique, such as low exit gas velocity, skewed exit velocity, large traverse area, variability of particulate concentration and velocity over the

exit area, and variability in the design of the exhaust areas on different brands of dryers. The accuracy and precision of the technique are not sufficient for determining compliance. EPA has concluded that methods for measuring mass particulate emissions from grain dryers are not available at this time. The only practical and feasible method of measuring particulate matter emissions from grain dryers is visible emission determinations.

Table 8-1 illustrates the four options considered by EPA for controlling emissions from column and rack dryers. Two cases for column dryers were evaluated; column dryers without screen filter controls with a perforation size range of 0.050 to 0.084 inch and column dryers with a vacuum-cleaned screen filter. For the rack dryers, the two cases considered were rack dryers with screens and rack dryers with vacuum-cleaned screens. For each of these cases, all the emission data that is available is tabulated along with the total capital cost, total annual costs, annual incremental costs, and the impact on installation of new dryers.

The available source test data, which can only be used as a guide (see Chapter 5) indicate that the most efficient demonstrated method for controlling particulate emissions from grain dryers, both column and rack designs, is to cover the exhaust area with a 100 mesh screen (filter) equipped with a vacuum type cleaning mechanism. (Some plugging problems have occurred under certain operating conditions when 100 mesh screen filters are used.) EPA estimates (Case 2, Table 8-1) that approximately 520 new column dryers would not be installed over a five-year

TABLE 8-1. Alternative Controls for Column and Rack Dryers (2000 bu/hr capacity)

Case No.	Type of Dryer: Column	Type of Dryer: Rack	Type of Control: No Screen	Type of Control: Screen	Type of Control: Vacuum-Cleaned Screen	Emissions: Visible Emissions	Emissions: Opacity of Emissions	Emissions: Mass[D] Emissions (lb/ton)	Costs[E]: Capital Installed ($)	Costs[E]: Total Annual ($/bu)	Costs[E]: Incremental Annual Control ($/bu)[%]	Impact on Installation of New Dryers (No./5 yr.)
1	X		X			Visible	Perforation Size Range 0.050 to 0.084 inch 0%	.25[B]	105,000	0.0393	0	0
2	X				X	100 Mesh No Data 58 Mesh Visible	100 Mesh No Data 58 Mesh 0%[C]	100 Mesh .05[B] 58 Mesh 0.18	158,400	0.051	0.0117[30%]	-520
3		X		X		24-30 Mesh Visible	24-30 Mesh 5-10%[A]	24-30 Mesh 1.1[B]	114,300	0.0394	0	0
4		X			X	100 Mesh No Visible Emissions 50 Mesh Visible	100 Mesh 0%[C] 50 Mesh 0%	100 Mesh .05 50 Mesh 0.5[B]	152,000	0.0477	0.0083[21%]	0

A. Visual observations were taken sporadically by an unqualified opacity reader.
B. Estimates from Figure 4-9 (use only as a guide).
C. Observation by unqualified opacity reader.
D. All mass data should only be used as a guide, due to inadequacies of measurement method.
E. Costs based on dryer life of 15 years.

period if compliance with the NSPS required the use of a 100 mesh vacuum-cleaned screen filter. In the absence of NSPS, approximately 1380 new column dryers would be installed. If a coarser screen of 50 mesh were required, the screen plugging problem would be reduced; however, a vacuum cleaning mechanism would still probably be needed. Therefore, the adverse economic impact would not be reduced. It is EPA's judgment that the economic impact of a standard that would require vacuum-cleaned screens for column dryers (Case 2, Table 8-1) is not reasonable.

The control costs are reduced if a screen filter rather than a vacuum-cleaned screen filter were operated on a column dryer. However, the available data on opacity and the trends indicated by the available particulate test data (see Chapter 5 of this document) do not clearly demonstrate that there would be an appreciable difference in emissions between column dryers equipped with the coarsest screen filters now used on grain dryers, and those equipped with conventional perforated plates but no screen filters. Further, some types of column dryers, because of their configuration, cannot reasonably be equipped with screen filters. Therefore, the proposed standards were not based on controlling column dryers with screens (filters).

The remaining emission control alternative is the operation of a column dryer with no screen (Case 1, Table 8-1). Since the economic

impact of NSPS compared to State standards is reasonable if no screen is used, EPA has concluded that this alternative is best demonstrated technology considering cost for column dryers. EPA attempted to determine whether smaller perforations in column dryer plates produce lower emissions. However, no difference in opacity was observed for the range of hole diameters from 0.050" to 0.084". There are operational problems with sizes of 0.050" to 0.0625" because of pluggage. However, many dryers operate with plates having 0.084" diameter holes with no apparent problems. Consequently, the column plate perforation size for best demonstrated technology considering costs is concluded to be 2.1 mm (ca. 0.084 inch).

There are no environmental impacts associated with the best demonstrated technology considering costs for column dryers compared with the typical State standard, since they are essentially the same. Both standards allow column dryers to operate without additional air pollution control equipment. However, individual State standards rely mainly on nuisance codes and process weight charts for enforcement. It is questionable whether process weight charts can be directly applied to dryer emissions and the enforcement of nuisance codes is subjective.

In order to reduce emissions from rack dryers to a level comparable to that of best demonstrated technology for column dryers, it would be necessary to install a screen particulate collecting device. The source test data gathered by EPA and by elevator operators (discussed earlier in this section and in Chapter 5) indicate that emissions from a rack dryer equipped with a 50 mesh vacuum-cleaned screen are approximately equivalent

to the emissions from a column dryer with no screen. Typical State standards now require rack type dryers to use 20 to 30 mesh screens for pollution control. Requiring a 50 mesh vacuum-cleaned screen would strengthen the trend toward use of column dryers by country elevators, but would have no additional economic impact on the grain elevator industry.

8.3.2 Air Pollution Control Devices

EPA separately considered the capture systems at various grain operations and the air pollution control devices used to remove the captured particulate matter from the gas stream before discharge to the atmosphere. The proposed standards would require air pollution control devices on all of the affected facilities at a grain elevator, except grain dryers and some types of dust-tight grain handling operations.

Almost every grain elevator that controls emissions uses either a cyclone or a fabric filter. Low-energy scrubbing devices are used occasionally; however, they are generally not as efficient as cyclones or fabric filters. Cyclones and fabric filters were evaluated by EPA to determine the best demonstrated control technology, considering costs, for grain operations.

Cyclones are classified as either high-efficiency or low-efficiency. The higher gas velocity in high-efficiency cyclones, which are the most common control device presently used at grain elevators, results in a collection efficiency of about 85 to 95 percent. The pressure drop across a high efficiency cyclone is approximately 3 to 5 inches of water. The lower gas velocity in low-efficiency cyclones results in

collection efficiencies between 60 and 85 percent, and pressure drops of only 0.5 to 2.0 inches of water.

The typical modern fabric filter at a grain elevator handles 2,000 to 30,000 cubic feet of air per minute. Most are package units that can be supplied by several manufacturers. The filters usually operate under negative pressure with the fan pulling air through the system. Felted, synthetic fabrics are the most common collection media. The air-to-cloth ratio is usually between 10:1 and 15:1. The filter bags are cleaned by mechanical shaking or by forcing a jet of air through them to force the dust cake off the fabric. Fabric filters typically attain collection efficiencies of better than 99 percent.

EPA measured emissions according to Reference Method 5, except that the probe was not heated, from eleven grain processes controlled with fabric filters. The results summarized in Chapter 5 of this document cover grain unloading, handling, and loading operations. The average concentration of particulate matter emissions from all facilities, excluding one which had high emissions due to process irregularities, was 0.007 g/std. m^3 dry basis. Most of the individual test results were below 0.023 g/std. m^3 dry basis. EPA did not measure emissions from cyclones, but estimates that emissions from grain operations controlled by cyclones average a factor of 10 times that of fabric filter control devices.

Therefore, EPA has determined, based on the available data, that the best demonstrated system of emission reduction (considering costs) for grain operations is a fabric filter.

There are no significant environmental impacts associated with this control method when compared to cyclone control which is now generally

required by State standards. Some additional particulate matter will be collected, and power requirements will be somewhat increased.

8.3.3 Truck and Railcar Unloading Stations

The generation of particulate emissions and the methods of unloading grain from trucks and railcars, both boxcars and hopper cars, are similar. Grain, contained in a railcar or truck bed, is delivered to the elevator where it is rapidly unloaded by pouring the grain into a hopper recessed in the ground. Trucks and boxcars are mechanically elevated and/or tilted so that the grain is emptied from the vehicle. Grain from a hopper car and some trucks is released through outlets at the base of each individual hopper section. These operations are described in detail in Chapter 4 of this document. A falling stream of grain is created in each of these cases which generates turbulent air flow in the receiving hopper. Particulate matter in the grain is entrained in the turbulent air currents and flows out of the hopper with the displaced air if controls are not applied.

The demonstrated methods for controlling particulate emissions from truck and railcar unloading operations include a collection hood, in the receiving hopper, ventilated to an air pollution control device and a protective enclosure around the facility to reduce the interfering effect of winds.

Three alternatives were evaluated by EPA concerning protective enclosures of the unloading station. Generally, enclosures or sheds are used to protect the grain and workers from inclement weather. In some locations, however, where the weather is consistently dry, unloading stations do not have sheds. In developing the proposed standards, EPA determined that a protective

enclosure is required to prevent wind from greatly interfering with the effectiveness of particulate capture by the hopper ventilation system.

The alternative protective enclosures considered were (1) a shed with two open ends, (2) a shed with one open end, and (3) a totally enclosed shed. A shed with two open ends was determined to be least effective because it allows the wind to blow directly through and over the receiving hopper. A shed with one open end and a totally enclosed shed were found to greatly diminish the effects of wind upon the ventilation system.

The totally enclosed shed has been demonstrated in railcar (hopper and boxcar) unloading operations, where the two ends of the shed are equipped with quick-operating doors. However, all of the truck unloading facilities inspected by EPA were designed so that the front end of the truck extends out from under the open end of the shed. Some reduction in particulate emissions could be realized by totally enclosing the truck unloading operation; however, no elevators that use this method are known by EPA. In order to totally enclose the operation, the shed would have to be greatly increased in both length and height because the front ends of the trucks are raised considerably to allow the grain to flow out the rear of the truck. This would increase the cost of the shed substantially. In addition, truck unloading operations are located at all small country elevators, whereas railcar unloading is only found at larger elevators. Greatly increased costs would be incurred, especially at small elevators, and minimal reduction

in emissions would result from the use of a completely enclosed shed on truck unloading operations. Therefore, EPA has concluded that the best demonstrated system of emission reduction (considering costs) for truck unloading stations is a shed with one open end and for railcar unloading stations is a totally enclosed shed.

When compared to typical State standards, these control methods will have minimal secondary environmental impacts. More particulate matter will be collected, some of which may have to be disposed of, and the energy requirement will be somewhat greater.

The system for railcar unloading would include a receiving hopper equipped with baffles and ventilated at a rate of approximately 15,000 to 25,000 cfm depending on the size of the facility. The system for truck unloading would include a receiving hopper equipped with baffles and ventilated at a rate of approximately 12,000 cfm.

8.3.4 Barge and Ship Unloading Equipment

Barge and ship unloading stations are generally open to the weather. Grain is unloaded with a bucket elevator (leg) that is lowered into the vessel. Particulate matter is generated in the hold of the vessel by the buckets of the leg and at the transfer point at the top of the leg where the grain is dumped into a receiving hopper. To completely clean the barge, it is usually necessary to push or pull the grain to the leg with power shovels or front end loaders, which generates a large amount of particulate matter emissions.

All of the bucket elevators observed by EPA during the development of the proposed standards had various types of enclosures and

were ventilated. Ventilation should be applied, to effectively control particulate matter emissions, on both sides of the bottom portion of the leg and at the top of the leg where the grain is transferred to a storage bin. A facility with the leg enclosed from the top (including the receiving hopper) to the center line of the bottom pulley appeared to perform with the least emissions. This facility was observed in operation with and without the ventilation system in operation. Ventilation was applied at the base of the leg and at the top of the elevator. Significantly higher opacities were observed during the operation without ventilation than when the ventilation was in use. The ventilation rate used at this facility, which was 32.1 actual cubic meters per cubic meter of grain handling capacity (ca. 40 ft^3/bu), was judged to be adequate to effectively capture the particulate emissions (refer to Chapter 4 of this document).

Therefore, EPA considers the best demonstrated system of emission reduction (considering costs) for barge and ship unloading stations to be a leg enclosed from the top (including the receiving hopper) to the center line of the bottom pulley with ventilation to a particulate control device maintained on both sides of the leg and the grain receiving hopper. The total rate of air ventilation must be at least 32.1 actual cubic meters per cubic meter of grain handling capacity (ca. 40 ft^3/bu).

8.3.5 Grain Handling Operations

Grain handling equipment is used to transfer grain from unloading operations to storage, to clean and weigh the grain, and to transfer the grain from storage to loading operations. Conveyors, surge and garner bins, turn heads, cleaners, scalpers, trippers, legs, scales, the headhouse and other such structures are the individual pieces of equipment included under grain handling equipment. Most of the individual pieces of equipment are usually located inside of the headhouse or associated elevator structures. Emissions from these operations, if not properly controlled, can be emitted through doors or windows of the headhouse. For purposes of the proposed standard, the housing for the conveyor and tripper mechanism atop the storage silos is considered to be part of the headhouse. In some cases, however, various grain handling equipment is located outside of the headhouse. Some conveyor systems, especially at elevators which load and unload ships and barges, are always outside of the headhouse.

Emissions from grain handling equipment generally occur at transfer points in the system and at openings in the partial enclosures that house some equipment such as cleaners. Emissions can also be generated over the length of outside conveyors if they are not properly shielded from winds. At transfer points, the grain is "dropped" from one piece of equipment to another and the resulting air turbulence can generate particulate matter emissions.

Particulate emissions from grain handling equipment can be minimized through the use of totally enclosed equipment, by handling the grain at a slower rate, or by using ventilated hooding systems designed to capture emissions.

EPA has concluded, based on available data and field inspection of all of the equipment listed under grain handling, that the best demonstrated system of emission reduction (considering costs) for grain handling operations are:

1. Cleaners - Two methods are considered to be equally effective. Screen cleaners can be controlled by hooding or partially enclosing the cleaner and ventilating the particulate matter to a particulate control device. Alternatively, screen cleaners can be totally enclosed without ventilation.
2. Conveyors - Conveyors can be completely enclosed and should have a hooding mechanism ventilated to a particulate control device at any transfer point along the conveyor.
3. Scales, surge and garner bins, turn heads, scalpers, and legs - Scales, surge bins and garner bins can be vented to a particulate control device. The bins can be vented to each other so the air can be exhausted to a single control device. Turn heads and scalpers can be enclosed and ventilated to a particulate control device. These operations can also be fitted with total enclosures. Legs can be ventilated at the top and bottom where grain exits and enters the bucket elevator.

4. Trippers and tripper conveyors - Trippers can be equipped with a hooding system ventilated to a particulate control device. The conveyor associated with the tripper can be enclosed and can be ventilated at all transfer points.
5. Headhouse and other such structures - All other grain handling operations which are located inside these structures can be equipped with the best system of emission reduction (considering costs) for that operation.

These technologies apply equally to the individual grain handling equipment contained within the headhouse and equipment which is located outside of the headhouse.

8.3.6 Truck and Railcar Loading Stations

The methods of loading grain into trucks and railcars (boxcars and hopper cars) are similar. A stream of grain flows via the force of gravity through a loading spout into the compartment of the vehicle. The mechanisms that generate particulate emissions are also similar. During these operations, particulate matter in the grain is entrained in turbulent air currents produced when the stream of grain impacts the vehicle compartment or grain which has already been loaded. The particulate matter can then be emitted from the compartment with the displaced air.

EPA has observed demonstrated methods for controlling particulate emissions from truck and railcar loading operations that include a ventilated hooding system and a partial enclosure around the vehicle and loading spout to reduce the interfering effects of winds.

Truck Loading

During the development of the proposed standards, EPA could not locate a truck loading operation in the grain industry that used what was considered to be the best system of emission reduction (considering cost) that could be applied. Therefore, other industries such as lime and flour and grain processing were studied in an attempt to find well controlled truck loading operations in these industries. EPA located and observed a soybean meal truck loading operation. This operation is well controlled; however, it does not have what is considered to be the best system of emission reduction. Loading soybean meal into trucks was determined by EPA to be as dusty an operation as loading grain into trucks; therefore, a direct transfer of technology to grain loading operations is possible.

Trucks were loaded with soybean meal inside of a shed with one open end. The loading spout was equipped with a canvas sleeve, but the soybean meal had to fall about ten to twelve feet from the end of the sleeve into the truck bed. Particulate matter was generated from this process after the meal impacted the truck bed. The shed was ventilated by a duct at a rate of approximately 6000 cfm. The ventilation duct was located beside and to the rear of the loading spout and was not very effective in containing emissions. EPA believes that a better control system can be designed than the one observed; however, this is the best system that has been demonstrated for truck loading operations which are very similar to grain loading operations. EPA has concluded that the best system of emission reduction (considering costs) for truck loading operations is a

shed with one open end, equipped with a loading spout with a canvas sleeve and a hooding system ventilated at a rate of approximately 10,000 to 12,250 cfm. A total enclosure of the truck loading operation would more effectively eliminate the interfering effects of winds. However, no such truck loading operation was found in the field.

Hopper Car and Boxcar Loading

Particulate matter emissions which result from the loading of grain into hopper cars is controlled in the grain industry by a hooding system, ventilated to an air pollution control device, located at the end of the loading spout. The loading operation is usually enclosed in a shed with two open ends. This control method is the only effective demonstrated particulate control system used for loading grain into hopper cars. The type of hooding and the ventilation rates are the only variables. Several hopper car grain loading systems were studied by EPA by reviewing the manufacturer's designs of the systems and through communications with grain elevator operators and plant engineers. EPA gathered data from the operation which was determined to be the most effective system.

EPA has concluded that the best system of emission reduction (considering costs) for railroad hopper car loading stations is a shed with two open ends, and a hooding system located next to the loading spout which is ventilated at a rate of about 10,000 cfm.

The grain industry has essentially only one demonstrated particulate control method for loading boxcars. This technology is explained in Chapter 4 of this document. The technology consists of a small building-like structure that is elevated to the level of the boxcar door. This structure encloses a forked and curved loading spout and the enclosure is ventilated. The entire operation is usually enclosed in a shed with two open ends.

EPA took opacity measurements on the best controlled facility which was found. The operation observed, however, was not considered to employ the best control technology that could be applied. This facility could be maintained in better condition and higher ventilation rates could be used.

Hopper car loading and boxcar loading operations are similar and best technology requires a shed with two open ends and a hooded loading spout ventilated to an air pollution control device on both facilities. The grain flows through a loading spout and is deposited in a receiving vessel (the railcar) at each facility. Fugitive particulate matter emissions are also generated in a similar manner. The stream of grain and induced air flowing into the railcar disturbs and displaces the air in the railcar. Also, when the grain impacts against the receiving vessel, turbulence is created in the surrounding air. Particulate matter can be entrained in the turbulent air currents and flow out of the railcar with the displaced air. Possible alternatives could be to entirely enclose the loading operation or to have a door on one end; however, no such technology presently exists in the field.

EPA has concluded that the best system of emission reduction (considering costs) for railroad boxcar loading stations is a shed with two open ends. A loading spout enclosed by a small building-like structure which extends to within 6 inches of the side of the boxcar and hinged doors about 8 inches wide, equipped with rubber flaps, which seal the sides of the enclosure to the boxcar are part of this best control system. This building-like structure is ventilated at a rate of about 10,000 cfm.

8.3.3 Barge and Ship Loading Stations

Grain is loaded into ships and barges after it is conveyed from storage to the loading area. The grain falls down long loading spouts that are inserted into the holds of the vessels. Particulate emissions occur when the grain drops from the end of the loading spout into the hold, and when particulate matter in the grain already deposited becomes reentrained in the disturbed air of the hold. The entrained particulate matter can then exit through the hold opening into the outside air.

EPA considered two systems for controlling particulate matter emissions from barge and ship loading. The first consists of a telescoping loading spout that is adjusted to the elevation of the grain surface as loading proceeds. Ventilation is applied at the end of the spout. Two variations of this system were observed by EPA. The end of the loading spout on one system was extended into the grain surface to minimize the generation of emissions. The other operation used a "dead box" system at the end of the spout to slow the flow of

the grain as it entered the hold. The end of the spout was usually kept a slight distance (six inches to one foot) above the grain level in the hold. The second system considered was to cover the hold with canvas or plastic sheeting except where the loading spout enters. However, no system of this type was observed in operation. Particulate matter can be ventilated from beneath the cover to reduce emissions from the hold.

EPA has concluded that the best system of emission reduction (considering costs) for barge and ship loading operations is a telescopic loading spout which is adjusted to extend directly into the surface of the grain. Approximately 20,000 cfm of ventilation is applied to the loading spout system. EPA believes, however, that by covering the entire hold or by using a "dead box" system on the loading spout, equivalent control can be achieved.

8.3.8 Economic and Environmental Impacts

There will be minimal adverse environmental impacts if the best system of emission reduction (considering costs) is applied to each affected facility at grain elevators. As proposed, the standards would accomplish an overall reduction of more than 99 percent in uncontrolled particulate emissions from new grain elevators. This will result in significantly reducing the emissions of particulate matter to the atmosphere. The existing elevators are controlled with cyclones while the proposed standards will require the

use of baghouse control. A typical cyclone is approximately 90 percent efficient on particulate matter from grain elevators while a baghouse is estimated to be approximately 99 percent efficient.

Estimates for various model grain elevators show that the proposed standards would reduce particulate matter emissions to a level that is 67 to 94 percent less than levels required by typical State standards. This reduction in emissions results in a significant reduction of ambient concentrations of particulate matter in the vicinity of grain elevators. The maximum 24-hour average concentration at a distance of 0.3 km from the model facilities would be reduced to a level that is 52 to 76 percent lower than the maximum concentration that results from control to the levels of typical State standards. By 1981, the proposed standards would reduce the total amount of particulate matter emissions into the atmosphere by 23,000 tons per year. These estimates indicate that the primary environmental impact of the proposed standards are beneficial and also significant. The secondary environmental impacts of the proposed standards would be minor. There will be no impact on water pollution because only dry collectors would be used to control particulate emissions. Minimal additional solid waste handling or disposal problems would be caused by the standard. Currently, approximately 68 percent of the particulate matter collected by emission control devices at elevators is returned to the grain, 30 percent is sold for use in feed manufacturing and

2 percent is disposed of as solid waste. The additional particulate matter collected by more efficient control devices will either be sold for feed or landfilled. Generally, this additional particulate matter will be sold for feed. The market for any one elevator, however, is dependent upon its location relative to feed manufacturers. EPA estimates the amount of particulate matter disposed of will remain at about 2 percent, which would amount to about 0.14 pound per ton of grain. This amounts to only 20 percent of the amount of particulate matter disposed of at an uncontrolled grain elevator. The proposed standards would have minimal adverse impacts on noise and land-use considerations. A relatively minor amount of particulate matter, sulfur dioxide and nitrogen oxides would be discharged into the atmosphere from power plants supplying the additional electrical power required for the air pollution control devices needed to achieve the proposed standards. Overall, there will be a significant positive effect in reducing the amount of particulate emissions to the ambient atmosphere.

The incremental energy required, above the typical State standard requirements, by the proposed standards to control all new, modified, or reconstructed grain elevators constructed by 1981 is equivalent to about 17,000 barrels of Number 6 fuel oil. This indicates that the proposed standards would have a minor impact on the imbalance between national energy demand and domestic supply. The energy requirements of the proposed standards would result from the use of fabric filter control instead of the existing cyclone control requirements. The additional energy that would be required to meet the proposed standards represents approximately 23 percent of the total process energy

requirements of new grain elevators. This is an increase of about 5 percent above the energy presently needed to meet typical State standard requirements for new grain elevators.

Standards of performance for new and modified stationary sources sometimes result in a more severe economic impact on smaller firms than larger ones. This occurs primarily because economies of scale generally favor larger installations and competitiveness has a greater impact on smaller firms. For these reasons, EPA has proposed a lower size cut-off, based on yearly grain through-put of 700,000 bushels. This amount of grain corresponds to a total leg capacity of 10,000 bushels/hr and the proposed standards exempt farm, country, terminal grain elevators and commercial rice dryers that have a total leg capacity less than 10,000 bu/hr. There is no lower size cut-off for storage elevators at processing plants, except commercial rice dryers, because these plants can afford the necessary controls to meet the proposed standards. Therefore, the proposed standards would have no adverse impact on small businesses. The total added production cost in relation to sales price of the proposed standard is 0.5 percent based on a selling price of $2.40 per bushel for corn. This cost includes the cost imposed by the standard from the farm to the port terminal elevator. The maximum cost added at an individual grain elevator is less than 1 cent per bushel. The costs that new, modified and reconstructed grain elevators would incur to comply with the proposed standards are considered reasonable. A detailed discussion of the economic considerations evaluated is presented in Chapter 6 of this document.

8.4 SELECTION OF THE FORMAT AND EMISSION LIMITS OF THE PROPOSED STANDARDS

Emission limits and standards for affected facilities at grain elevators were chosen based on the available data and information on best systems of emission reduction (considering costs) discussed in Section 8.3 and Chapter 5. The purpose of each of the quantitative emission standards is to ensure that the best system of particulate emission reduction, considering costs, is applied to each affected facility. In addition, the standards must be in a form which is enforceable.

Particulate emissions from the affected facilities at a grain elevator, excluding air pollution control devices, are considered fugitive emissions. These emissions are discharged from an exhaust area that is usually very large. Therefore, it is difficult to apply the usual particulate source test methods designed for measuring stack emissions to affected facilities at grain elevators. In addition, numerous difficulties, such as low exit gas velocity, skewed exit velocity, variability of particulate concentration and velocity over the exit area, and the variability in the design of exhaust areas make source testing impractical. EPA has concluded that practical and feasible methods for measuring the mass of fugitive particulate emissions from affected facilities at grain elevators are not available at this time. Therefore, neither mass nor concentration standards have been proposed for affected facilities at grain elevators. The remaining options for regulating emissions are visible emission/opacity standards and equipment standards. For these reasons, the proposed standards

include visible emission/opacity standards for six affected facilities, an opacity standard with the alternative of using specified equipment for one affected facility, and an equipment standard for one affected facility. A concentration standard and an opacity standard are proposed for air pollution control devices.

The proposed visible emission standards include zero percent, 10 percent, and 15 percent opacity standards and a no visible emission standard. These various visible emission standards are necessary because of the different characteristics of the emissions from the affected facilities. The no visible emission limit means that an inspector viewing a source would see no visible emissions without the aid of instruments. This is achievable when an affected facility is totally enclosed with proper ventilation. Under this arrangement, no visible emissions escape to the atmosphere. The emissions from facilities subject to the zero or greater percent opacity levels would be evaluated according to EPA Reference Method 9. Reference Method 9 specifies that 24 observations be taken at 15-second intervals and averaged over a 6-minute period. The individual observations are recorded in 5 percent increments (0, 5, 10, etc.); however, averaging 24 observations may result in a six-minute average which is not a whole number. The 6-minute average is to be rounded off to the nearest whole number following the standard rules of rounding (e.g., 0.49 would be rounded off to 0, 0.50 would be 1, 7.51 would be 8 etc.). This means that an affected facility subject to a zero percent opacity standard could have two of 24 observations at 5 percent opacity and the

other 22 observations at 0 percent opacity and still be in compliance. The six-minute average in this case would be 0.42 percent and would be rounded off to 0 percent, the nearest whole number.

Grain Dryers

The proposed standard for grain dryers limits emissions to zero percent opacity (six-minute average), or alternatively column dryers are in compliance if the column perforation diameters are 2.1 mm (ca. 0.084 inch) or less and rack dryers are in compliance provided all exhaust gases pass through a 50 or finer mesh screen filter. The opacity standard was developed from a total of 130 six-minute opacity averages taken on five column-type dryers with varying perforation diameters. Four six-minute averages were rejected because of the interference of steam in the exhaust. The remaining 126 averages ranged from no visible emissions to one percent opacity, and the majority were zero percent opacity. Two rack-type dryers were observed for visible emissions. One was equipped with a 50 mesh vacuum-cleaned screen (filter) and the other had no screen. A total of 5 six-minute opacity averages, ranging from no visible emissions to zero percent opacity, were taken at the rack dryer equipped with the 50 mesh screen. EPA believes that column dryers equipped with column perforation diameters of 2.1 mm (ca. 0.084 inch) or less and rack dryers equipped with 50 or finer mesh screens will achieve the proposed emission limit of zero percent opacity. Therefore, as an alternative, EPA has proposed the option that a column dryer may be equipped with column perforations of 2.1 mm (ca. 0.084 inch) or less and rack dryers may be equipped with 50 or finer mesh screens.

Air Pollution Control Devices

As explained in Section 8.3, EPA concluded that fabric filters represent the best system of emission reduction (considering costs) for all of the affected facilities at a grain elevator, except grain dryers and some types of dust-tight grain handling operations. EPA measured particulate emissions according to Reference Method 5, except that the probe was not heated, from eleven grain processes controlled with fabric filters.

EPA considered both mass and concentration units for the proposed standards. The basic difference is that a standard which restricts the mass rate of emissions would minimize the total mass emitted, whereas concentration units allow the mass rate to increase in direct proportion with the volume of gas exhausted through the control device. This is an advantage for concentration units for grain elevators since the concentration standard does not discourage use of large volumes of ventilation air. As one might surmize, adequate suction at the collection hood is necessary for complete capture of the particulate matter generated by the process. Another advantage of concentration units is that the emission test provides all information necessary for enforcement (determination of mass emissions per volume of gas discharged through the control device). Mass standards, however, are usually based on a unit of product or raw material to the process. They require an accurate determination of both mass emissions and product or raw material weight. The latter are obtainable only from the operator and are often difficult

parameters to measure. This is particularly true for grain elevator operations for the following reasons.

1. The amount of grain handled on conveyor belts, legs, or cleaners is generally not measured.
2. If more than one process is controlled by a single collector (i.e., headhouse filter), it may be impossible to determine the process weight during compliance testing. When a standard with concentration units is applicable to each process, compliance for any number of processes can be determined by only measuring the concentration from the control device.

The average concentration of particulate matter emissions from all the grain processes tested, excluding one which had high emissions due to process irregularities, was .007 gram per standard cubic meter dry basis. Most of the individual test results were below .023 gram per standard cubic meter dry basis. Therefore, EPA selected .023 gram per standard cubic meter dry basis as the emission limit for the proposed standards. To meet this emission limit, it would be necessary for grain operations to install and properly operate fabric filter control systems rather than less effective control systems such as high efficiency cyclones.

A zero percent opacity standard (based on six-minute averages) is also proposed for air pollution control devices. EPA observed two fabric filter systems on grain processes and all of the individual readings, a total of 56 six-minute averages, were no visible emissions. EPA believes that the proposed standard of

zero percent opacity will ensure the proper operation and maintenance of the air pollution control device.

Truck Unloading

An emission standard of no more than zero percent opacity (six-minute average) is proposed for truck unloading operations at grain elevators. A total of 138 six-minute opacity averages have been gathered by EPA. The range of these six-minute averages is no visible emissions to 1 (0.83) percent. A total of 120 six-minute averages were no visible emissions and 17 six-minute averages were zero percent opacity. Based on the available data, EPA has concluded that a standard of zero percent opacity can be achieved by the best technology, considering costs, for truck unloading of grain.

Railcar Unloading

The proposed standard for unloading railcars, both boxcars and hopper cars, at grain elevators is no visible emissions. A total of two hours of visible emission/opacity data was gathered by EPA on a boxcar unloading operation at a grain elevator. Every data point, taken at 15-second intervals, was no visible emissions. Data to substantiate the standard were not collected for hopper car unloading operations. However, EPA has observed hopper car unloading operations and believes that unloading of boxcars is a dustier operation than unloading of hopper cars. Therefore, the proposed standard applies to both hopper cars and boxcars. Based on the available data, EPA concluded that no visible emissions from railcar unloading is achievable.

Barge and Ship Unloading

An equipment standard is proposed for barge and ship unloading operations at grain elevators. EPA took visible emission/opacity

observations of a barge unloading operation. The resulting data show an extremely wide range of opacity, with some six-minute averages above 65 percent opacity. EPA decided that an opacity standard could not be set, due to this wide range of six-minute opacity averages, that would ensure the use of best demonstrated control technology. Therefore, EPA has proposed a standard which requires the leg to be enclosed from the top (including the receiving hopper) to the center line of the bottom pulley with ventilation to a particulate control device maintained on both sides of the leg and the grain receiving hopper. The total rate of air ventilated must be at least 32.1 actual cubic meters per cubic meter of grain handling capacity (ca. 40 ft^3/bu).

Grain Handling Operations

The proposed standards would require grain handling operations to meet a zero percent opacity standard (six-minute average). As described in Section 8.3, this standard applies to grain handling equipment located inside of elevator structures (usually headhouses), to those located outside of elevator structures and to the elevator structures themselves. Approximately four hours of visible emission/opacity data were obtained by EPA on an exterior conveyor and on a headhouse. These observations were taken concurrently. All of the data, taken at 15-second intervals, were no visible emissions. Separate data were not obtained on every piece of grain equipment included under grain handling operations. However, the items included under this affected facility, listed in Section 8.2, were in operation during the time the headhouse was being observed. A zero percent opacity standard has been proposed instead of no visible emissions. Zero

percent opacity (six-minute average) allows the possibility of slight emissions from the headhouse. Based on these available data and information, EPA believes that a zero percent opacity standard is achievable and will require the use of the best system of emission reduction (considering costs) for grain handling operations.

Truck Loading

Truck loading operations at grain elevators will be required to limit emissions to 10 percent opacity under the proposed standards. A total of 30 six-minute opacity averages were gathered by EPA from a truck loading operation. The six-minute opacity averages ranged from one percent to 10 percent. The proposed standard is based on these data. As explained in Section 8.3, EPA believes that a better control system can be designed than the one observed. However, this operation is the best technology presently available in the field.

Boxcar and Hopper Car Loading

EPA is proposing a zero percent opacity limit for boxcar loading and for hopper car loading at grain elevators. EPA believes that a zero percent opacity limit will require the use of the best control technologies, considering cost, which are explained in Section 8.3.

A total of 6 six-minute opacity averages were gathered by EPA on boxcar loading operations. These averages ranged from three percent to five percent opacity. As explained in Section 8.3, EPA believes that the boxcar loading operation observed could be maintained in better condition and have a greater amount of ventilation. EPA is proposing a zero percent opacity standard for boxcar loading based on a transfer of technology from hopper car loading.

A hopper car loading operation was observed by EPA personnel and approximately two and a half hours of visible emission/opacity data were gathered. Ninety-nine percent of all readings taken, at 15-second intervals, were no visible emissions. There was no appreciable wind during this observation period. Therefore, EPA has proposed a zero percent opacity limit to allow for possible slight particulate emissions during other than ideal conditions.

Barge and Ship Loading

EPA observed ship loading operations at a grain elevator and gathered approximately six hours of visible emission/opacity data. These data were summarized into 67 six-minute averages. EPA further divided these averages into 18 six-minute averages during the topping off operation and 49 six-minute averages during normal loading operations.

Topping-off is defined in the regulation as that part of the barge or ship loading operation which occurs within four feet of the top of the hold. The six-minute averages taken during topping-off operations varied greatly and the range was no visible emissions to 17 percent opacity. Only one six-minute average was above 15 percent opacity. EPA, therefore, is proposing an emission standard of 15 percent opacity during the topping-off period of barge and ship loading operations. The available data show that this is achievable by the best demonstrated technology, considering cost.

The range of the 49 six-minute averages taken during normal loading operations was no visible emissions to 9 percent opacity. Based on these data, EPA is proposing an emission standard of 10 percent opacity for normal barge and ship loading operations.

EPA has no data on loading grain into barges. However, EPA has observed barge loading operations and considers barge and ship loading operations to be similar and has concluded that the above mentioned standards apply to barge loading as well as to ship loading.

8.5 MODIFICATION AND RECONSTRUCTION CONSIDERATIONS

Two actions that would render an existing elevator subject to the standards of performance for new sources are "modification" or "reconstruction." All of the pollution sources at grain elevators have been classified by EPA into eight affected facilities. This allows each affected facility to be modified or reconstructed without causing the entire grain elevator to be subject to the proposed standards. If the equipment or operations at an affected facility are altered in a manner which increases air pollution, that facility may become subject to the standards in accordance with section 111(a)(4) of the Clean Air Act. Regulations to implement this provision have been promulgated in 40 CFR 60 and amendments to these general provisions were promulgated in 40 CFR on December 16, 1975.

Modifications

Modification of an existing facility is any physical change in, or change in the method of operation of that facility which requires a capital investment and increases the amount of particulate

emitted to the atmosphere [provided the amount of particulate emitted to the atmosphere increases as specified in 40 CFR 60.14(b) or which results in the emission of any air pollutant (to which a standard applies) into the atmosphere not previously emitted]. Any change in a facility that results in an increase in the uncontrolled emission rate (in kilograms per hour) is not considered a modification if the emission rate to the atmosphere is maintained at the same level by upgrading the collection system. Also, an increase in the emission rate to the atmosphere can be permitted at one affected facility if the operator can demonstrate to the Administrator's satisfaction that the total emission rate from all existing affected facilities at the stationary source has not increased. Examples of modifications to elevators are increases in the grain handling capacity of unloading systems, cleaners, dryers, conveyors, legs, scales, storage capacity, or loading systems, which result in increased particulate emissions (kg/h) to the atmosphere. This would occur if a grain elevator were to upgrade its facilities to take advantage of unit train discount rates.

The following are not considered modifications:

1. An increase in grain through-put which is accomplished without making physical changes requiring capital expenditure (i.e., by increasing operating time).
2. Changes to an emission control system, except when the replacement system is considered less efficient by the Administrator.

3. Addition of storage capacity without an increase in air pollution.

Reconstruction

An "existing facility" would become subject to the standards of performance for new sources upon reconstruction, irrespective of any change in emission rate. Reconstruction entails the replacement of components of an existing facility to such an extent that the fixed capital cost of the new components exceeds 50 percent of the fixed capital cost that would be required to construct a comparable entirely new facility, provided it is technically and economically feasible to meet the applicable standards.

Examples of reconstruction are:

1. Replacement of a facility destroyed by fire, flood, tornado, or other catastrophe, and
2. Replacement of a substantial portion of the conveyors, legs, or other grain handling equipment with equipment of the same capacity.

8.6 SELECTION OF MONITORING REQUIREMENTS

Continuous opacity monitoring systems are not required on the control device exhausts because estimated costs of procurement, installation and start-up are relatively high (usually more than ten percent) compared to the investment costs of the control systems for grain elevators. The costs of monitoring were judged not to be reasonable by EPA, even though enforcement of the standard would be enhanced by the installation of monitors.

8.7 SELECTION OF PERFORMANCE TEST METHODS

In developing the data base for standards of performance for new sources and in specifying a reference method for use in compliance testing, several factors are of primary importance:

(a) The method used for data gathering and the method subsequently established as the reference method must be the same, or must have a known relationship to each other.

(b) The method should measure pollutant emissions which are indicative of the performance of the best systems of emission reduction.

(c) The method should include methodology conducive to producing consistent and reliable test results.

For particulate matter emissions from stacks, EPA relies primarily upon Method 5 which meets these three criteria.

Method 5 was used to obtain the data base for the particulate emissions concentration standard for new grain elevators; however, the method was not used exactly as prescribed in the Federal Register (EPA, NSPS, Federal Register, 36(247): 24882-24895). The electric heating systems for the probe and filter holder were not used for two reasons. First, the gas streams sampled were essentially ambient streams, of low temperature and moisture content. Consequently, even without the heaters, no significant amount of water vapor would condense ahead of the impingers. Second, grain dust (particulate), when emitted in sufficiently high concentrations, presents an explosion

hazard; use of the electrical systems presents a possible source of accidental ignition.

The effect of operating the sampling train without heaters was that the particulate collection took place at stack (ambient) temperature, rather than at 250°F. Thus, for this type of source, in-stack and out-of-stack filtration methods (whichever method is used, the collection temperature is the same) can be considered equivalent provided that the in-stack filter does not appreciably affect velocity measurements and adequate leak check procedures are followed.

In light of this, two reference methods are being proposed for compliance testing for the particulate emissions concentration standard at new grain elevators: (1) Method 5 with the probe and filter heaters off, and (2) Method 17, a modification of Method 5, in which an in-stack filter replaces the glass probe and out-of-stack filter. Method 17 employs the same type of filter and other sampling procedures as are used in Method 5. Method 17 involves only minor modification of existing equipment and, by eliminating the need for a glass-lined probe and a rigid probe-to-filter holder connection, results in a simplification of compliance test procedures. Reference Method 17 has already been proposed in the New Source Performance Standards for Kraft Pulp Mills.

Method 9 is the reference method which EPA has developed for compliance testing of opacity standards. This method has already been promulgated.

Grain dryers typically exhaust directly from the outlet of the control device to the atmosphere without the use of an exhaust stack. The cross sectional area of the outlets is generally quite large.

The resulting low velocities and unconfined flow are not amenable to sampling with conventional techniques. Therefore, during the development of the standards of performance, attempts were made to develop methodology which would allow representative sampling. Since hooding could cause exhaust pressure buildup and upset the drying process, the procedures which were employed focused upon techniques for measuring low velocities, and for obtaining representative samples unaffected by crosswinds. Both a hot wire anemometer, and special pitot tube technique were used in attempts to accurately measure velocity. A three-foot section of 12-inch diameter duct was placed perpendicular to the exhaust outlet to serve as a mini-stack. Sampling was conducted at the center of the duct section while the duct section was traversed across the control device outlet. Based upon the experience gained during two tests employing these techniques, it was concluded that sampling results of acceptable accuracy could not be obtained. Both the problem of crosswinds, and the strong vertical component present in the exhaust gas flow which varies from source to source were identified as primary factors preventing obtainment of representative samples.

APPENDIX A

EVOLUTION OF THE PROPOSED STANDARDS

APPENDIX A

EVOLUTION OF THE PROPOSED STANDARDS

Date	Company, Consultant or Agency	Location	Nature of Action
7/1/71	EPA	Durham, N.C.	Initiation of engineering and cost study of the Grain and Feed Industry, contracted to Midwest Research Institute.
7/14/71	American Feed Manufacturers Association	Chicago, Ill.	EPA met with AFMA to discuss the purpose and goals of the engineering and cost study and solicit mutual cooperation.
7/20/71	Central Soya	Chicago, Ill.	Inspection to locate well controlled grain handling operations.
7/20/71	Cargill Inc.	Chicago, Ill.	Inspection to locate well controlled grain handling operations.
7/20/71	Continental Grain Co.	Chicago, Ill.	Inspection to locate well controlled grain handling operations.
7/27/71	Bunge Co.	Hutchinson, Kansas	Inspection to locate well controlled grain handling operations.
7/27/71	FAR-MAR-CO	Hutchinson, Kansas	Inspection to locate well controlled grain handling operations.
7/28/71	Kansas Grain and Feed Dealers Association	Hutchinson, Kansas	Inspection to locate well controlled grain handling operations.
7/29/71	Farmland Ibdustries, Inc.	Kansas City, Mo.	Inspection to locate well controlled grain handling operations.
8/71	Dr. A.T. Rossano, Univ. of Washington	Seattle, Wash.	EPA met with Dr. Rossano to discuss recent air pollution investigations at a new port terminal elevator in Seattle.

APPENDIX A (continued)

EVOLUTION OF THE PROPOSED STANDARDS

Date	Company, Consultant or Agency	Location	Nature of Action
8/71	Puget Sound Air Pollution Control Agency	Seattle, Wash.	EPA met with PSAPCA to discuss emission standards for grain elevators and emission test data.
8/71	Marshall-Barr-Pacquer, Industrial Consulting Engineers	Seattle, Wash.	EPA met with representatives of Marshall-Barr-Pacquer to discuss the design features of new grain elevators.
8/71	Mel Jarvis Construction Co., Inc.	Salina, Kansas	EPA met with representatives of Mel Jarvis Construction Co., Inc. to discuss the design features of new grain elevators.
8/71	Borton, Inc.	Hutchinson, Kansas	EPA met with representatives of Borton, Inc. to discuss the design features of new grain elevators.
8/71	Kice Metal Products Co.	Wichita, Kansas	EPA met with representatives of Kice Metal Products Co. to discuss the design features of new grain elevators.
9/71	National Grain and Feed Association	Washington, D.C.	EPA met with the Chairman of the Environmental Quality Committee of NGFA to discuss financial data required for the economic analysis.
9/71	Hart-Carter Co.	Minneapolis, Minn.	EPA met with representatives of Hart-Carter to discuss control of grain dryers and other grain operations.
9/71	Cargill, Inc.	Minneapolis, Minn.	EPA met with representatives of Cargill to discuss design of control systems for Cargill elevators.
9/71	Aerodyne Development Corp.	Cleveland, Ohio	EPA met with representatives of Aerodyne to discuss design of control systems for new elevators.
9/71	Aeroglide Corp.	Raleigh, N.C.	EPA met with representatives of Aeroglide to discuss grain dryer operation, costs and control techniques.

APPENDIX A (continued)

EVOLUTION OF THE PROPOSED STANDARDS

Date	Company, Consultant or Agency	Location	Nature of Action
9/71	Illinois Environmental Protection Agency	Springfield, Ill.	EPA met with representatives of the Illinois EPA to discuss emission standards for grain elevators and complaints that have been received on grain processes.
9/16/71	Cargill, Inc.	Tuscola, Ill.	Inspection of air pollution control systems at an inland terminal elevator.
10/12/71	Wyandotte Elevator	Kansas City, Kansas	Inspection of air pollution control systems at an inland terminal elevator.
10/21/71	Pillsbury Co.	Florence, Ill.	Inspection of a river terminal elevator.
10/71	Pillsbury Co.	Wayne City, Ill.	Inspection of a country elevator.
12/9/71	Koppel Terminal Elevator	Long Beach, Ca.	Inspection of air pollution control systems at a port terminal elevator.
3/16/72	The Andersons	Marimee, Ohio	Inspection to locate well controlled grain handling operations.
3/17/72	Gold Proof Elevator	Louisville, Ky.	Inspection of a controlled grain dryer.
3/72	Cargill, Inc.	Tuscola, Ill.	Particulate matter emission tests of truck unloading and grain handling facilities.
4/12/72	Continental Grain Co.	Westwego, La.	Inspection of a controlled barge unloading facility.
4/12/72	Mississippi River Elevator Co.	Myrtle Grove, La.	Inspection to locate a well controlled port terminal elevator.
4/13/72	Bayside Elevator Co.	Reserve, La.	Inspection to locate a well controlled port terminal elevator.

APPENDIX A (continued)

EVOLUTION OF THE PROPOSED STANDARDS

Date	Company, Consultant or Agency	Location	Nature of Action
5/16/72	San Francisco Grain Terminal Co.	San Francisco, Ca.	Inspection to locate well controlled grain handling operations.
5/18/72	Dreyfus Elevator Co.	Portland, Oregon	Inspection to locate well controlled grain handling operations.
5/19/72	Cargill, Inc.	Seattle, Wash.	Inspection to locate well controlled grain handling operations.
5/30/72	Farmers Marketing Association	Denver, Colorado	Inspection to locate well controlled grain handling operations.
5/31/72	Cargill, Inc.	Denver, Colorado	Inspection to locate well controlled grain handling operations.
6/1/72	Adolph Coors Co.	Golden, Colorado	Inspection of grain storage facilities to locate well controlled grain handling operations.
7/72	Kansas City Terminal Elevator	Kansas City, Mo.	Inspection to locate well controlled grain handling operations.
8/9,10/72	Cargill, Inc.	Fayetteville, N.C.	Particulate matter emission testing of truck unloadi facility.
9/7/72	Quaker Oats Co.	Chattanooga, Tenn.	Inspection of a controlled grain dryer.
10/17-19/72	Continental Grain Co.	Westwego, La.	Particulate matter emission testing of a barge unloading facility.
11/28-30/72	Cargill, Inc.	Denver, Colorado	Particulate matter emission testing of a grain dryer
12/7/72	Seaboard Allied Milling Co.	Culpepper, Va.	Inspection of a flour mill to locate well controlled grain handling and cleaning operations.

APPENDIX A (continued)

EVOLUTION OF THE PROPOSED STANDARDS

Date	Company, Consultant or Agency	Location	Nature of Action
1/10/73	San Francisco Grain Terminal	San Francisco, Ca.	Particulate matter emission testing of grain handling operations.
3/12/73	Pillsbury Co.	Wayne City, Ill.	Inspection of a controlled railroad hopper car loading facility.
3/15/73	Pillsbury Co.	Florence, Ill.	Inspection of controlled barge loading facility.
3/15/73	Farmers Terminal Elevator	Beardstown, Ill.	Inspection to locate well controlled grain handling operations.
3/15/73	Ferruzzi and Co.	Beardstown, Ill.	Inspection to locate well controlled grain handling operations.
3/15/73	Continental Grain Co.	Beardstown, Ill.	Inspection to locate well controlled grain handling operations.
3/15/73	Farmers Elevator Co.	Bluff Springs, Ill.	Inspection to locate well controlled grain handling operations.
3/15/73	Cargill, Inc.	Havana, Ill.	Inspection to locate well controlled grain handling operations.
3/15/73	Continental Grain Co.	Havana, Ill.	Inspection to locate well controlled grain handling operations.
3/15/73	Illinois Grain Co.	Havana, Ill.	Inspection to locate well controlled grain handling operations.
3/28/73	Bunge Elevator	Destrehan, La.	Inspection to locate well controlled grain handling operations.

APPENDIX A (continued)

EVOLUTION OF THE PROPOSED STANDARDS

Date	Company, Consultant or Agency	Location	Nature of Action
3/28/73	St. Charles Grain Elevator	Destrehan, La.	Inspection to locate well controlled grain handling operations.
3/28/73	Cargill, Inc.	Baton Rouge, La.	Inspection to locate well controlled grain handling operations.
3/29/73	Mississippi River Elevator	Myrtle Grove, La.	Inspection to locate well controlled grain handling operations.
4/2-5/73	Quaker Oats Co.	Chattanooga, Tenn.	Particulate matter emission testing of a grain dryer
4/23-27/73	Seaboard Allied Milling Co.	Culpepper, Va.	Particulate matter emission testing of a grain cleaning operation.
6/4/73	Cargill, Inc.	Seattle, Wash.	Inspection to locate well controlled grain handling operations.
7/24,25/73	Grain and Feed Industry Advisory Committee	Durham, N.C.	EPA met with GFIAC to review the final report prepared by MRI on the grain industry.
10/2-6/73	Cargill, Inc.	Seattle, Wash.	Particulate matter emission testing of railroad boxcar unloading and ship loading facilities.
10/16-19/73	Kansas City Terminal Elevator	Kansas City, Mo.	Particulate matter emission testing of railroad hopper car loading facilities.
10/29-31/73	Bunge Corp.	Destrehan, La.	Particulate matter emission testing of barge unloading equipment.
11/13-16/73	Quaker Oats Co.	St. Joseph, Mo.	Particulate matter emission testing of grain dryer.
1/24/74	Bunge Corp.	West Memphis, Arkansas	Sent 114 letter requesting air pollution control cost information.

APPENDIX A (continued)

EVOLUTION OF THE PROPOSED STANDARDS

Date	Company, Consultant or Agency	Location	Nature of Action
1/24/74	Quaker Oats Co.	Chicago, Ill.	Sent 114 letter requesting air pollution control cost information.
2/26/74	Dept. of the Environment	Ottawa, Ontario, Canada	Received letter requesting information on emission standards, emission factors and control techniques.
3/74	National Grain and Feed Association	Washington, D.C.	Sent copies of Emissions Control in the Grain and Feed Industry, Volume I - Engineering and Cost Study to be distributed to the industry.
4/18/74	Jarvis Construction Co.	Salina, Kansas	Telephone conversation regarding the number of grain elevators under construction, their capacity, and the air pollution control equipment being installed.
4/22/74	Borton Inc.	Hutchinson, Kansas	Telephone conversation regarding the number of grain elevators under construction, their capacity, and the air pollution control equipment being installed.
11/74	EPA	Research Triangle Park, N.C.	Memorandum from L. Budney, Source-Receptor Analysis Branch, to S.T. Cuffe, Chief, Industrial Studies Branch, "Methodology for Estimating the Impact of Grain Elevator Emissions on Air Quality."
12/2/74	Cargill, Inc.	Minneapolis, Minn.	Telephone conversation to determine the amount of grain dust sold, disposed of and returned to the grai
12/3/74	Bunge Corp.	West Memphis, Arkansas	Telephone conversation to determine the value of grain dust.
1/75	EPA	Research Triangle Park, N.C.	Memorandum from K. Woodard to J. Berry, Industrial Studies Branch, on telephone calls to determine solid waste disposal and energy requirements at grain elevators.

APPENDIX A (continued)

EVOLUTION OF THE PROPOSED STANDARDS

Date	Company, Consultant or Agency	Location	Nature of Action
1/21/75	EPA	Durham, N.C.	EPA Working Group reviewed the recommended standards.
2/19/75	EPA	Atlanta, Ga.	Review of the recommended standards by the National Air Pollution Control Techniques Advisory Committee (NAPCTAC).
3/2/75	Cargill, Inc.	Minneapolis, Minn.	Telephone conversation from F.L. Bunyard, EPA, to D. Enge, Cargill, regarding costs.
3/7/75	H.C. Wiedenmann and Son, Inc.	Kansas City, Mo.	Letter from F.L. Bunyard, EPA, to R. Noland, Wiedenmann, regarding costs.
3/13/75	H.C. Wiedenmann and Son, Inc.	Kansas City, Mo.	Letter from R. Noland, Wiedenmann, to F.L. Bunyard, EPA, regarding costs.
3/13/75	Supreme Rice Mills	Crowley, La.	Inspection of rice mill to compare with grain handling operation.
3/17/75	CEA-Carter-Day Co.	Minneapolis, Minn.	Letter from L. Funk, Carter-Day, to F.L. Bunyard, EPA, regarding costs.
4/24/75	Corn Refiners Association	Research Triangle Park, N.C.	EPA met with CFA to discuss the recommended standard and control techniques required.
5/15/75	Aeroglide Corp.	Durham, N.C.	EPA met with representatives of Aeroglide to discuss the recommended standards for grain dryers.
7/28/75	National Grain and Feed Association	Durham, N.C.	EPA met with NGFA to discuss the recommended standards.
8/27/75	National Council of Farmer Cooperatives	Denver, Colorado	EPA met with NCFC to discuss the recommended standards.

APPENDIX A (continued)

EVOLUTION OF THE PROPOSED STANDARDS

Date	Company, Consultant or Agency	Location	Nature of Action
9/22-25/75	Cargill, Inc.	Seattle, Wash.	Inspection of port terminal elevator to take visible emission/opacity observations of ship loading, truck unloading, boxcar unloading, and grain handling facilities.
9/24/75	Continental Grain Co.	Tacoma, Wash.	Inspection of ship loading facilities at a port terminal elevator.
9/29/75	Cargill, Inc.	Tuscola, Ill.	Inspection to take visible emission/opacity observations of truck unloading facility and the fabric filter on the facility.
9/30/75	Pillsbury Co.	Wayne City, Ill.	Inspection to take visible emission/opacity observations of a hopper car loading facility.
10/14/75	Minier Co-Op. Grain Co.	Minier, Ill.	Inspection of a column dryer at a country elevator.
10/15/75	Tremont Co-Op. Grain Co.	Tremont, Ill.	Inspection of a column dryer to take visible emission opacity observations.
10/15/75	San Jose Co-Op. Grain Co.	San Jose, Ill.	Inspection of a column dryer at a country elevator.
10/15/75	Farmers Grain and Coal Co.	Mason City, Ill.	Inspection of a column dryer to take visible emission opacity observations.
10/15/75	Illinois Grain Corp.	Havana, Ill.	Inspection of a column dryer at a river port terminal elevator.
10/16/75	Roanoke Farmers Assocation	Roanoke, Ill.	Inspection of two column dryers and one rack dryer to take visible emission/opacity observations.

APPENDIX A (continued)

EVOLUTION OF THE PROPOSED STANDARDS

Date	Company, Consultant or Agency	Location	Nature of Action
11/21/75	Cargill, Inc.	Fayetteville, N.C.	Inspection of a processing plant to take visible emission/opacity observations of a fabric filter on a truck unloading facility.
12/4/75	Aeroglide Corp.	Durham, N.C.	EPA met with representatives of Aeroglide to discuss the recommended standards for grain dryers.
2/3/76	Swift Edible Oil Co.	Des Moines, Iowa	Inspection of soybean processing plant to take visible emission/opacity observations of a soybean meal truck loading operation.
2/4/76	Cargill, Inc.	Minneapolis, Minn.	Inspection of a terminal elevator to take visible emission/opacity observations of a boxcar loading facility.
2/24/76	Cargill, Inc.	Denver, Colorado	Inspection of an inland terminal elevator to take visible emission/opacity observations of a hopper car loading facility.
3/76	Winamac Construction Co.	Winamac, Indiana	Telephone conversation concerning costs between F.L. Bunyard, EPA, and P. Kruzick, Winamac Construct Co.
3/76	Ruttman Companies	Upper Sandusky, Ohio	Telephone conversation concerning costs between F.L. Bunyard, EPA, and L. Allen, Ruttman Ind.
4/5/76	Todd and Sargent Construction Co.	Ames, Iowa	Telephone conversation concerning lower size cutoff for standards between N. Swanson, EPA, and Warren Sargent, Todd and Sargent.
4/5/76	Jarvis Construction Co.	Salina, Kansas	Telephone conversation concerning lower size cutoff for standards between N. Swanson, EPA, and D. Otis, Jarvis Construction Co.

APPENDIX A (continued)

EVOLUTION OF THE PROPOSED STANDARDS

Date	Company, Consultant or Agency	Location	Nature of Action
4/30/76	EPA	Durham, N.C.	EPA Working Group reviewed the recommended standards.
6/25/76	EPA	Washington, D.C.	The EPA Steering Committee reviewed the recommended standards.
7/15/76	EPA	Washington, D.C.	The recommended standards package started external review by Federal agencies and departments.
8/13/76	National Grain and Feed Association	Durham, N.C.	EPA met with NGFA to discuss their comments on the recommended standards.
8/25/76	Cargill, Inc.	Fayetteville, N.C.	Inspection of soybean processing plant to take visible emission/opacity observations of a rack dryer equipped with a 50 mesh screen filter and a column dryer.
9/1/76	Dept. of Agriculture	Washington, D.C.	EPA met with the Dept. of Agriculture to discuss their comments on the recommended standards.
10/26/76	Dept. of Agriculture and Office of Management and Budget	Washington, D.C.	EPA met with the Dept. of Agriculture and OMB to discuss comments on the recommended standards.
11/3/76	EPA	Washington, D.C.	The recommended standards package completed external review by Federal agencies and departments.
11/18/76	EPA	Washington, D.C.	The package was forwarded to Washington for final EPA concurrence.

APPENDIX B

INDEX TO ENVIRONMENTAL IMPACT CONSIDERATIONS

This index consists of a reference system, cross-indexed with the October 21, 1974, FEDERAL REGISTER (39 FR 37419) containing the Agency guidelines concerning the preparation of Environmental Impact Statements. This index can be used to identify sections of the document which contain data and information germane to any portion of these FEDERAL REGISTER guidelines.

CROSS INDEXED REFERENCE SYSTEM TO HIGHLIGHT
ENVIRONMENTAL IMPACT PORTIONS OF THE DOCUMENT

Agency Guideline for Preparing Regulatory Action Environmental Impact Statements (39 FR 37419)	Location Within the Standards Support and Environmental Impact Statement
1. Background and description of the proposed action.	
-Describe the recommended or proposed action and its purpose.	The proposed standards are summarized in Chapter 1, Section 1.1. The statutory basis for the proposed standards (Section 111 of the Clean Air Act, as amended) is discussed in the Introduction. The purpose of the proposed standards is discussed in Chapter 8, Sections 8.1 and 8.2.
-The relationship to other actions and proposals significantly affected by the proposed action shall be discussed, including not only other Agency activities but also those of other governmental and private organizations.	To the knowledge of EPA, there are no other actions or proposals at this time which will be significantly affected by this proposed standard.
2. Alternatives to the proposed action.	
-Describe and objectively weigh reasonable alternatives to the proposed action, to the extent such alternatives are permitted by the law... For use as a reference point to which other actions can be compared, the analysis of alternatives should include the alternative of taking no action, or of postponing action. In addition, the analysis should include alternatives having different environmental impacts, including proposing standards, criteria, procedures, or actions of varying degress of stringency. When appropriate, actions with similar environmental impacts but based on different technical approaches should be discussed. This analysis shall evaluate alternatives in such a manner that reviewers can judge their relative desirability.	The alternative control systems, based upon the best combinations of control techniques, are presented in Chapter 4, Section 4.5. A discussion of the alternative of taking no action and that of postponing the proposed action is presented in Chapter 7, Sections 7.6.2 and 7.6.3 and in Chapter 1, Section 1.2. The alternative systems are discussed throughout the document in the evaluation of the environmental and economic impacts associated with the proposed standards. The selection of the best system of emission reduction, considering costs, is presented in Chapter 8, Section 8.3. The alternative formats of the proposed standards and the rationale for the selection of the proposed formats are discussed in Chapter 8, Section 8.4. Also discussed in Section 8.4 are the emission limits for particulate matter and the rationale for their selection.

CROSS INDEXED REFERENCE SYSTEM TO HIGHLIGHT
ENVIRONMENTAL IMPACT PORTIONS OF THE DOCUMENT

Agency Guideline for Preparing Regulatory Action Environmental Impact Statements (39 FR 37419)	Location Within the Standards Support and Environmental Impact Statement
-The analysis should be sufficiently detailed to reveal the Agency's comparative evaluation of the beneficial and adverse environmental, health, social, and economic effects of the proposed action and each reasonable alternative.	A summary of the environmental and economic impacts associated with the proposed standards is presented in Chapter 1, Section 1.2. A detailed discussion of the environmental effects of each of the alternative control systems can be found in Chapter 7. This chapter includes discussion of the beneficial and adverse impacts on air, water, solid waste, energy, noise, radiation and other environmental considerations. A detailed analysis of the costs and economic impacts associated with the proposed standards can be found in Chapter 6.
-Where the authorizing legislation limits the Agency from taking certain factors into account in its decision making, the comparative evaluation should discuss all relevant factors, but clearly identify those factors which the authorizing legislation requires to be the basis of the decision making.	The factors which the authorizing legislation requires to be the basis of the decision making are discussed in the Introduction.
-In addition, the reasons why the proposed action is believed by the Agency to be the best course of action shall be explained.	The rationale for the selection of particulate matter emissions from grain elevators for control under the proposed standards is discussed in Chapter 8, Section 8.1.

CROSS INDEXED REFERENCE SYSTEM TO HIGHLIGHT
ENVIRONMENTAL IMPACT PORTIONS OF THE DOCUMENT

Agency Guideline for Preparing Regulatory Action Environmental Impact Statements (39 FR 37419)	Location Within the Standards Support and Environmental Impact Statement
3. Environmental impact of the proposed action.	
A. Primary impact Primary impacts are those that can be attributed directly to the action, such as reduced levels of specific pollutants brought about by a new standard and the physical changes that occur in the various media with this reduction.	The primary impacts on mass particulate emissions and ambient air quality due to the alternative control systems are discussed in Chapter 7, Section 7.1. Primary impacts are summarized in Table 1-2, Matrix of Environmental and Economic Impacts of the Alternative Systems, Chapter 1, Section 1.2.
B. Secondary impact Secondary impacts are indirect or induced impacts. For example, mandatory reduction of specific pollutants brought about by a new standard could result in the adoption of control technology that exacerbates another pollution problem and would be a secondary impact.	The secondary environmental impacts attributable to the alternative control systems are discussed in Chapter 7. These impacts are summarized in Table 7-1, Adverse Secondary Environmental Impacts of Individual Control Techniques Over SIP Requirements, Chapter 7, Introduction
4. Other considerations.	
A. Adverse impacts which cannot be avoided should the proposal be implemented. Describe the kinds and magnitudes of adverse impacts which cannot be reduced in severity to an acceptable level or which can be reduced to an acceptable level but not eliminated. These may include air or water pollution, damage to ecological systems, reduction in economic activities, threats to health, or undesirable land use patterns. Remedial, protective, and mitigative measures which will be taken as part of the proposed action shall be identified.	A summary of the potential adverse environmental and economic impacts associated with the proposed standards and the alternatives that were considered are discussed in Chapter 7 and in Chapter 1, Section 1.2.

CROSS INDEXED REFERENCE SYSTEM TO HIGHLIGHT
ENVIRONMENTAL IMPACT PORTIONS OF THE DOCUMENT

Agency Guideline for Preparing Regulatory Action Environmental Impact Statements (39 FR 37419)	Location Within the Standards Support and Environmental Impact Statement
B. Relationship between local short-term uses of man's environment and the maintenance and enhancement of long-term productivity. Describe the extent to which the proposed action involves trade-offs between short-term environmental gains at the expense of long-term losses or vice versa and the extent to which the proposed action forecloses future options. Special attention shall be given to effects which pose long-term risks to health or safety. In addition, the timing of the proposed action shall be explained and justified.	The discussion of the use of man's environment is included in Chapter 7, Section 7.6.1. A discussion of the effects of particulate matter from grain elevators is included in Chapter 8, Section 8.1.
C. Irreversible and irretrievable commitments of resources which would be involved in the proposed action should it be implemented. Describe the extent to which the proposed action curtails the diversity and range of beneficial uses of the environment. For example, irreversible damage can result if a standard is not sufficiently stringent.	Irreversible and irretrievable commitments of resources are discussed in Chapter 7, Section 7.6.1.

APPENDIX C

EMISSION SOURCE TEST DATA SUMMARY

EMISSION SOURCE TEST DATA SUMMARY

INTRODUCTION

This section presents the summaries of the particulate source tests cited in Chapter 5. In addition, each facility tested for mass particulate data and for visible emission data is described. The facilities are identified by the same coding that is used in Chapter 5. All of the visible emission/opacity data and the mass particulate source test data from grain dryers are presented in summarized form in Chapter 5.

EPA Reference Method 5, promulgated in the Federal Register on December 23, 1971 (36 FR 24877), was used to gather the data to support the proposed particulate standards. Method 5 was not used exactly as prescribed in the Federal Register. The electrical heating systems for the probe and filter holder were not used because the gas streams sampled were of low temperature and moisture content and grain dust (particulate matter) presents a possible explosion hazard.

DESCRIPTION OF FACILITIES AND SUMMARY OF RESULTS

A. Facility A is a truck unloading station at an inland terminal elevator with a shed with one open end and a deep receiving hopper. It has two lanes, side by side, so that two trucks can be unloaded at the same time. Both receiving hoppers are ventilated to a fabric filter. During the particulate tests of the fabric filter, corn was the only grain unloaded. The process was operating normally. A rectangular extension was

added to the fan exhaust and three particulate samples were collected.

Corn and soybeans were being unloaded during the visible emission/opacity tests which were conducted at a later date than when the particulate tests of the fabric filter were run. Both fugitive particulate emissions and emissions from the fabric filter were observed. A summary of the visible emission data can be found in Chapter 5.

B. Facility B is a truck unloading station at a soybean processing plant with a shed with two open ends. The receiving hopper is undersized so there is some choke-feed effect. The receiving hopper is ventilated to a fabric filter located beside the unloading shed. Only soybeans are unloaded at this facility. Normal unloading operations were maintained. Three particulate samples were collected.

Visible emission/opacity observations were made at the fabric filter exhaust at a later date than when the particulate tests were run. A summary of the visible emission data obtained is included in Chapter 5.

C. Facility C is a railroad boxcar unloading station at a port terminal elevator. It is a two-laned facility enclosed by a shed with quick-closing doors at each end. The receiving hopper is ventilated to a fabric filter. The doors at one end of the shed remained open during the particulate testing of the fabric filter. The process was operating normally during

the testing period and wheat was the only grain unloaded. Three particulate samples were collected at the inlet and outlet of the fabric filter.

Fugitive visible emission/opacity observations were conducted at a later date than the particulate testing at this facility. Both doors on the ends of the shed were kept closed, during the unloading operation, throughout the observation period. Chapter 5 includes a summary of the visible emission data obtained at this facility.

D. Facility D is barge unloading equipment at a port terminal elevator. The leg, receiving hopper, and conveyor belt transfer points are partially enclosed and are ventilated to a fabric filter. Three particulate samples were collected at the outlet of the fabric filter. Wheat was unloaded during the first particulate test and corn was unloaded during the last two tests. The leg was operating at full capacity throughout the testing period.

Fugitive visible emission/opacity observations were taken concurrently with the particulate tests. The opacity reader was not qualified to read opacity at this time. The visible emission data obtained at this facility are summarized in Chapter 5.

E. Facility E is barge unloading equipment at a port terminal elevator. The leg and receiving hopper are fully enclosed and the conveyor transfer points are hooded. These grain handling equipment

are ventilated to a fabric filter. The leg operated at full capacity throughout the tests as barges of soybeans and corn were unloaded. Three particulate samples were collected at the filter inlet and outlet.

Fugitive visible emission/opacity observations were taken concurrently with the particulate tests. The opacity reader was not qualified to read opacity at this time. The observer was also forced to face into the sun because of the location of the river. The visible emission data obtained are summarized in Chapter 5.

F. Facility F consists of three conveyor belts under the storage bins at a port terminal elevator. The conveyor belts are hooded along their entire lengths. The conveyor system is ventilated to a fabric filter from several points along the hooding system and from where the grain transfers to the elevator legs. The process was operating normally with one conveyor belt carrying grain during the particulate tests. Five particulate samples were collected at the fabric filter outlet. Milo was handled during the first four tests and wheat was handled during the fifth test. The results of the fourth test are exceptionally high due to the apparent contamination of the milo tested.

G. Facility G is a conveyor belt system transferring grain from truck receiving hoppers to an elevator leg. The conveyor system is ventilated to a fabric filter from the points where the grain drops from the hoppers onto the belt and where the grain discharges into the leg. The conveyor belt has no hooding

system. Corn was handled during the tests and the process operated normally. Three particulate samples were collected at the fabric filter outlet.

H. Facility H is a wheat cleaning system at a flour mill. Several pieces of cleaning equipment used to separate chaff, dirt, weed seeds, foreign grains and unsound kernels from the wheat are ventilated to a fabric filter. The cleaning system operated at capacity during the particulate emission tests. Three particulate samples were collected at the fabric filter outlet.

I. Facility I is a corn cleaner at an inland terminal elevator. The cleaner is ventilated to a fabric filter from the points where the corn enters and leaves the cleaner. Only one particulate sample could be collected since the cleaner is operated infrequently. The cleaner was operated at maximum capacity during the particulate emission test.

J. Facility J is a ship loading station at a port terminal elevator. Telescoping loading spouts were maintained within six inches of the grain surface and the ends of the spouts are ventilated to a fabric filter. The process operated normally and wheat was being loaded. Three particulate samples were collected at the fabric filter outlet.

Fugitive visible emission/opacity observations were taken at a later date than when the particulate emission tests were run. Two ships were observed while wheat was being loaded. Start-up loading, general loading and "topping-off" operations were observed. A summary of the visible emission data from this facility is included in Chapter 5.

K. Facility K is a railroad boxcar and hopper car loading station at an inland terminal elevator. The loading area is enclosed in a shed with two open ends. A stationary hood is located beside the railroad track and surrounds the loading spout for boxcars. A long rectangular hood is located above the center of the hopper cars to collect particulate matter from the hopper car loading operation. These hooding systems are then ventilated to a fabric filter. Three particulate samples were collected from the fabric filter outlet. Wheat, corn, milo and soybeans were loaded during the tests. The loading operation proceeded normally.

L. Facility L is a rack grain dryer controlled by a screen filter with 150 micron diameter openings. Corn was being dried and the process was operating normally. Chapter 5, Section 5.2 discusses the results of this particulate emission test.

M. Facility M is a column grain dryer controlled by a screen filter with 300 micron diameter openings. Corn was being dried and the process was operating normally. Chapter 5, Section 5.2 discusses the results of this particulate emission test.

N. Facility N is a truck unloading station at a port terminal elevator. The receiving hopper is ventilated to a fabric filter and is enclosed in a shed with one open end. The opposite end is equipped with quick-closing doors which are kept closed during the unloading operation. Unloading of wheat proceeded normally during the fugitive visible emission/opacity

observation period. These data are summarized in Chapter 5.

O. Facility O is a headhouse and exterior conveyor system (grain handling operations) located at a port terminal elevator. Wheat was being unloaded, transferred and cleaned within the headhouse during the fugitive visible emission/opacity observation period. The individual peices of handling equipment were generally controlled by hooding systems ventilated to fabric filters. The cleaner, however, was an enclosed unit with no ventilation. A summary of the fugitive visible emission data for this facility is included in Chapter 5.

P. Facility P is a soybean meal truck loading station at a soybean processing plant. The truck loading station included a shed with one open end. Trucks backed into the shed and were then loaded with soybean meal through a loading spout equipped with a canvas sleeve. There was a vertical free-fall distance of about ten to twelve feet from the spout to the empty truck bed. The shed was ventilated by an eight-inch duct to a fabric filter. A summary of the fugitive visible emission data for this facility is included in Chapter 5.

Q. Facility Q is a railroad boxcar loading station at an inland terminal elevator. The boxcar loading shed has two open ends and is long enough to accommodate two railcars on each of the two tracks inside the shed. The boxcar loading system is on one side of the shed. The loading spout is forked and curved

to distribute the grain into the front and back of the boxcar. A small building-like structure encloses the loading spout and extends to within six inches of the side of the boxcar. The sides of this enclosure have hinged doors equipped with rubber flaps to seal the sides to the boxcar. The enclosure is ventilated to a fabric filter. Barley was being loaded during the fugitive visible emission observation period. The data collected are summarized in Chapter 5.

R. Facility R is a railroad hopper car loading station at an inland terminal elevator. It includes a shed with two open ends and a special loading spout and hooding system located above the hopper openings of the railcar. This hooding system can be raised or lowered and is ventilated to a fabric filter. The shed has two tracks running through it. The fugitive visible emission data collected are summarized in Chapter 5.

S. Facility S is a 2500 bushel/hr cylindrically shaped column grain dryer located at a country elevator. The perforation plate hole diameters are a series of sizes from top to bottom; .078 inch, .0625 inch and .056 inch. Normal drying of corn was maintained during the visible emission observation period. The visible emission data obtained at this facility are summarized in Chapter 5.

T. Facility T is a 3500 bushel/hr cylindrically shaped column grain dryer at a country elevator. The perforation plate hole diameters are of two different sizes. The top half has hole

diameters of .0625 inch and the lower half has hole diameters of .050 inch. Corn was being dried and normal operation was maintained during the observation period. A summary of the visible emission data is included in Chapter 5.

U. Facility U is a column grain dryer rated at 4000 bushels/hr located at a country elevator. It is rectangular in shape and exhausts through one side of the structure. The perforation plate hole diameters are .084 inch and are the same size over the height of the columns. This unit has four grain columns within the structure. Normal operation was maintained while corn was being dried. The visible emission data from this facility are summarized in Chapter 5.

V. Facility V is a 1000 bushel/hr column grain dryer located at a country elevator. It is rectangular in design and has perforation plate hole diameters of .084 inch. There are three grain columns in this dryer. Corn was being dried during the observation period and normal drying operation was maintained. A summary of the visible emission data from this dryer is included in Chapter 5.

W. Facility W is a rack grain dryer located at a country elevator. Corn was being dried during the observation period. Normal operation was maintained. This dryer was not equipped with any air pollution control devices. A summary of the visible emission data is included in Chapter 5.

X. Facility X is a 2500 bushel/hr rack grain dryer located at a soybean processing plant. Soybeans were being dried during the observation period. Normal operation was maintained. This dryer was equipped with a 50 mesh vacuum-cleaned screen filter. A summary of the visible emission data is included in Chapter 5.

Y. Facility Y is a 2500 bushel/hr column grain dryer located at a soybean processing plant. It is rectangular in design and has perforation plate hole diameters of .08 inch. Soybeans were being dried during the observation period and normal drying operation was maintained. A summary of the visible emission data from this dryer is included in Chapter 5.

TABLE C-1

FACILITY A[1]

Summary of Particulate Emission Data for Fabric Filter

Run Number	1	2	3	Average
Date	3/20/72	3/21/72	3/22/72	
Test Time - Minutes	90	180	180	
Stack Effluent				
Flow rate - ACFM	13,486	13,436	13,512	13,478
Flow rate - DSCFM	13,357	13,331	13,944	13,544
Temperature - °F	66.1	55.6	40.0	53.9
Water vapor - Vol. %	.1	.5	0.0	0.2
Particulate Emissions				
Probe and filter catch				
gr/DSCF	0.00549	0.00187	0.00146	0.00294
gr/ACF	0.00535	0.00186	0.00150	0.00290
lb/hr	0.628	0.213	0.167	0.336
Total catch				
gr/DSCF	0.00552	0.00262	0.00216	0.00343
gr/ACF	0.00546	0.00260	0.00222	0.00343
lb/hr	0.628	0.293	0.251	0.391

TABLE C-2

FACILITY B[2]

Summary of Particulate Emission Data for Fabric Filter

Run Number	1	2	3	Average
Date	8/8-9/72	8/9/72	8/10/72	
Test Time - Minutes	114	116	112	114
Stack Effluent				
Flow rate - ACFM	11,743	10,845	10,117	10,902
Flow rate - DSCFM	10,926	9,959	9,559	10,148
Temperature - °F	83.1	95.6	71.8	83.5
Water vapor - Vol. %	2.0	1.7	2.1	1.9
Particulate Emissions				
Probe and filter catch				
gr/DSCF	0.0067	0.0097	0.0019	0.0061
gr/ACF	0.0062	0.0089	0.0018	0.0056
lb/hr	0.62	0.83	0.17	0.54
Total catch				
gr/DSCF	0.0093	0.025	0.0035	0.0126
gr/ACF	0.0087	0.023	0.0033	0.0117
lb/hr	0.86	2.13	0.31	1.1

TABLE C-3

FACILITY C[3]

Summary of Particulate Emission Data for Fabric Filter

Run Number	1	2	3	Average
Date	10/2/73	10/3/73	10/4/73	
Test Time - Minutes	160	160	160	160
Stack Effluent				
Flow rate - ACFM	18,927	19,222	19,462	19,204
Flow rate - DSCFM	19,336	19,676	19,877	19,629
Temperature - °F	60.9	60.6	59.2	60.2
Water vapor - Vol. %	0.9	0.9	0.9	0.9
Particulate Emissions				
Probe and filter catch				
gr/DSCF	0.00073	0.00052	0.00042	0.00056
gr/ACF	0.00075	0.00053	0.00043	0.00057
lb/hr	0.12	0.09	0.07	0.09
Total catch				
gr/DSCF	0.00124	0.00105	0.00058	0.00096
gr/ACF	0.00127	0.00108	0.00059	0.00098
lb/hr	0.21	0.18	0.10	0.16

TABLE C-4

FACILITY D[4]

Summary of Particulate Emission Data For Fabric Filter

Run Number	1	2	3	Average
Date	10/17/72	10/18/72	10/18/72	
Test Time - Minutes	148	108	108	121
Stack Effluent				
Flow rate - ACFM	21,704	21,416	20,495	21,205
Flow rate - DSCFM	20,200	20,200	19,800	20,067
Temperature - °F	80.0	75.0	74.9	76.5
Water vapor - Vol. %	2.40	2.29	2.34	2.34
Particulate Emissions				
Probe and filter catch				
gr/DSCF	0.00392	0.00277	0.00932	0.00534
gr/ACF	0.00365	0.00261	0.00880	0.00502
lb/hr	0.687	0.485	1.584	0.92
Total catch				
gr/DSCF	0.00677	0.00449	0.0125	0.0079
gr/ACF	0.00630	0.00423	0.0118	0.0074
lb/hr	1.172	0.768	2.12	1.35

TABLE C-5

FACILITY E[5]

Summary of Particulate Emission Data For Fabric Filter

Run Number	1	2	3	Average
Date	10/30/73	10/30/73	10/31/73	
Test Time - Minutes	120	120	120	120
Stack Effluent				
Flow rate - ACFM	36,196	39,004	40,533	38,578
Flow rate - DSCFM	36,160	37,752	38,751	37,554
Temperature - °F	68.8	84.8	84.6	79.4
Water vapor - Vol. %	0.8	0.5	1.1	0.8
Particulate Emissions				
Probe and filter catch				
gr/DSCF	0.0212	0.0340	0.0219	0.0257
gr/ACF	0.0211	0.0329	0.0209	0.0250
lb/hr	6.56	11.01	7.27	8.28
Total catch				
gr/DSCF	0.0214	0.0344	0.0223	0.0261
gr/ACF	0.0214	0.0333	0.0213	0.0253
lb/hr	6.65	11.15	7.40	8.40

TABLE C-6

FACILITY F[6]

Summary of Particulate Emission Data For Fabric Filter

Run Number	1	2	3
Date	1/10/73	1/10/73	1/10/73
Test Time - Minutes	80	80	80
Stack Effluent			
Flow rate - ACFM	10,891	10,906	11,438
Flow rate - DSCFM	11,038	10,998	11,543
Temperature - °F	62	64	64
Water vapor - Vol. %	0.8	1.0	0.9
Particulate Emissions			
Probe and filter catch			
gr/DSCF	0.000034	0.000045	0.000021
gr/ACF	0.000034	0.000045	0.000021
lb/hr	0.00319	0.00422	0.00211
Total catch			
gr/DSCF	0.00138	0.00152	0.000596
gr/ACF	0.00138	0.00152	0.00060
lb/hr	0.13	0.14	0.059

TABLE C-7

FACILITY F[6]

Summary of Particulate Emission Data For Fabric Filter

Run Number	4	5	Average
Date	1/11/73	1/11/73	
Test Time - Minutes	80	80	80
Stack Effluent			
Flow rate - ACFM	10,895	11,134	11,053
Flow rate - DSCFM	11,066	11,275	11,184
Temperature - °F	62	62	62.8
Water vapor - Vol. %	0.6	0.9	.8
Particulate Emissions			
Probe and filter catch			
gr/DSCF	0.0347	0.000126	0.0020
gr/ACF	0.0352	0.000128	0.0070
lb/hr	3.29	0.012	0.66
Total catch			
gr/DSCF	0.0349	0.000783	0.0078
gr/ACF	0.0354	0.000793	0.0080
lb/hr	3.31	0.075	0.74

TABLE C-8

FACILITY G[1]

Summary of Particulate Emission Data For Fabric Filter

Run Number	1	2	3	Average
Date	3/22/72	3/23/72	3/24/72	
Test Time - Minutes	180	180	180	180
Stack Effluent				
Flow rate - ACFM	6,489	6,493	6,369	6,450
Flow rate - DSCFM	6,620	6,599	6,557	6,625
Temperature - °F	45.0	51.8	40.0	45.6
Water vapor - Vol. %	0.0	0.0	0.0	0.0
Particulate Emissions				
Probe and filter catch				
gr/DSCF	0.00144	0.00108	0.000305	0.00094
gr/ACF	0.00147	0.00110	0.000318	0.00096
lb/hr	0.0794	0.0594	0.0133	0.0507
Total catch				
gr/DSCF	0.00214	0.00169	0.000567	0.00147
gr/ACF	0.00219	0.00172	0.000592	0.00150
lb/hr	0.119	0.0924	0.0266	0.079

TABLE C-9

FACILITY H[7]

Summary of Particulate Emission Data For Fabric Filter

Run Number	1	2	3	Average
Date	4/23/73	4/24/73	4/24/73	
Test Time - Minutes	120	120	120	120
Stack Effluent				
Flow rate - ACFM	19,978	20,709	19,205	19,964
Flow rate - DSCFM	18,898	19,188	17,878	18,555
Temperature - °F	81.5	93.5	93.3	89.4
Water vapor - Vol. %	1.6	2.1	1.7	1.8
Particulate Emissions				
Probe and filter catch				
gr/DSCF	0.0040	0.0014	0.0019	0.0024
gr/ACF	0.0040	0.0013	0.0018	0.0024
lb/hr	0.66	0.22	0.29	0.39
Total catch				
gr/DSCF	0.0067	0.0047	0.0051	0.0055
gr/ACF	0.0066	0.0045	0.0049	0.0053
lb/hr	1.09	0.77	0.78	0.88

TABLE C-10

FACILITY I[8]

Summary of Particulate Emission Data For Fabric Filter

Run Number	1
Date	10/16/73
Test Time - Minutes	105
Stack Effluent	
Flow rate - ACFM	3,857
Flow rate - DSCFM	3,826
Temperature - °F	59.0
Water vapor - Vol. %	2.3
Particulate Emissions	
Probe and filter catch	
gr/DSCF	0.00277
gr/ACF	0.00275
lb/hr	0.09
Total catch	
gr/DSCF	0.00397
gr/ACF	0.00393
lb/hr	0.13

TABLE C-11

FACILITY J[3]

Summary of Particulate Emission Data for Fabric Filter

Run Number	1	2	3	Average
Date	10/5/72	10/5/72	10/6/72	
Test Time - Minutes	160	160	47	
Stack Effluent				
Flow rate - ACFM	21,956	20,186	19,662	20,602
Flow rate - DSCFM	22,510	20,223	19,582	20,772
Temperature - °F	54.8	56.5	58.5	56.6
Water vapor - Vol. %	0.5	0.9	1.1	0.83
Particulate Emissions				
Probe and filter catch				
gr/DSCF	0.00082	0.00082	0.00103	0.00089
gr/ACF	0.00084	0.00082	0.00103	0.00089
lb/hr	0.16	0.14	0.17	0.16
Total catch				
gr/DSCF	0.00100	0.00099	0.00270	0.00156
gr/ACF	0.00102	0.00099	0.00269	0.00157
lb/hr	0.19	0.17	0.45	0.27

TABLE C-12

FACILITY K[8]

Summary of Particulate Emission Data For Fabric Filter

Run Number	1	2	3	Average
Date	10/16/73	10/17/73	10/17/73	
Test Time - Minutes	160	160	160	160
Stack Effluent				
Flow rate - ACFM	6,136	5,064	4,982	5,394
Flow rate - DSCFM	6,099	4,926	4,782	5,269
Temperature - °F	65.0	75.0	80.0	73.3
Water vapor - Vol. %	0.8	0.8	1.0	0.87
Particulate Emissions				
Probe and filter catch				
gr/DSCF	0.00411	0.00824	0.01109	0.00781
gr/ACF	0.00408	0.00801	0.01064	0.00758
lb/hr	0.21	0.35	0.45	0.34
Total catch				
gr/DSCF	0.00558	0.01411	0.01796	0.01255
gr/ACF	0.00555	0.01372	0.01723	0.01217
lb/hr	0.29	0.60	0.74	0.54

REFERENCES

1. Logan, Thomas, "Emission Test Report" for Plants A and G, tests were conducted in March 1972. EPA Test No. 72-CI-23.

2. Ward, Thomas, "Emission Test Report" for Plant B, EPA Test No. 72-CI-33 (GRN), prepared for EPA by Environmental Engineering, Incorporated, Contract No. 68-02-0232, Task 14, August 1972.

3. Pfaff, Roger O., "Emission Test Report" for Plants C and J, EPA Test No. 74-GRN-8, January 1974.

4. Ward, Thomas, "Emission Test Report" for Plant D, EPA Test No. 73-GRN-2, prepared for EPA by York Research Corporation, November 1972.

5. Pfaff, Roger O., "Emission Test Report" for Plant E, EPA Test No. 74-GRN-7, January 1974.

6. Ward, Thomas, "Emission Test Report" for Plant F, EPA Test No. 73-GRN-3, prepared for EPA by Environmental Engineering Incorporated, Contract No. 68-02-0232, Task 20, January 1973.

7. Ward, Thomas, "Emission Test Report," for Plant H, EPA Test No. 73-GRN-5, the tests were conducted in April 1973.

8. Riley, C. E., "Emission Test Report" for Plants I and K, EMB Test No. 74-GRN-6, May 1974.

APPENDIX D

METHODOLOGY FOR ESTIMATING THE IMPACT OF GRAIN ELEVATOR FACILITIES ON AIR QUALITY

METHODOLOGY FOR ESTIMATING THE IMPACT OF GRAIN ELEVATOR FACILITIES ON AIR QUALITY

Particulate emissions from a grain elevator facility are complex. The emissions are generally distributed over a horizontal area of approximately 100 x 250 meters. Receiving and shipping operations (Table D-1) typically are widely distributed over that area, but no other generalizations can be made about the physical layout of such sources other than that they are near ground level. The other operations are not as widely distributed. The handling and cleaning operations result in emissions at several heights, ranging from near ground level to about 60 meters above ground level. An estimated average emission height for each grain elevator, operation, and level of emission control is listed in Table D-1.

There are essentially no well-defined stacks at such facilities. Most of the emissions are either fugitive in nature or are emitted from vents and control devices attached to or near the grain elevator buildings at various heights. All emissions are near ambient temperatures. The few stacks that do exist appear to be well within the regions of aerodynamic downwash at such facilities. Thus, effluent plume rise can be assumed to be negligible.

To estimate the impact of such facilities on air quality, it was first necessary to choose an appropriate atmospheric dispersion model and to consolidate the source information contained in the above discussion and Table D-1 into a form suitable for input to the

Table D-1. Particulate Emission Sources at Grain Elevator Facilities

Type of Grain Elevator	Operation	Level of Emission Control None = None 1 = System 1 2 = System 2 3 = System 3	Average Emission Height (m)	Emission Rate (g/sec)
Country Elevator (Models 1, 2, and Rice Dryers)	Receiving	None	1.5	9
		1	7.5	1.7
		2	7.5	.17
		3	7.5	.17
	Handling	None	46	3.2
		1	46	.51
		2	46	.05
		3	46	.05
	Cleaning	None	3	1.0
		1	23	.1
		2	23	.01
		3	23	.01
	Drying	None	5	6.5
		1	5	.97
		2	5	.97
		3	5	.32
High Through-put (Models 3 and 4)	Receiving	None	1.5	19.6
		1	7.5	1.32
		2	7.5	.13
		3	7.5	.13
	Handling	None	46	7.0
		1	46	.13
		2	46	.13
		3	46	.13
	Cleaning	None	3	2.2
		1	23	.22
		2	23	.02
		3	23	.02
	Drying	None	5	13.0
		1	5	1.94
		2	5	1.94
		3	5	.65
	Shipping	None	5	5.8
		1	7.5	1.07
		2	7.5	.09
		3	7.5	.09
Inland Terminal Elevator (Model 5)	Receiving	None	1.5	13
		1	7.5	2.9
		2	7.5	.29
		3	7.5	.29
	Handling	None	46	140
		1	46	.6
		2	46	.6
		3	46	.6
	Cleaning	None	3	3.3
		1	23	1.1
		2	23	.1
		3	23	.1
	Drying	None	5	13
		1	5	1.94
		2	5	1.94
		3	5	.65
	Shipping	None	5	44
		1	7.5	2.16
		2	7.5	.22
		3	7.5	.22
Port Terminal Elevator (Model 6)	Receiving	None	1.5	110
		1	7.5	1.6
		2	7.5	.4
		3	7.5	.4
	Handling	None	46	140
		1	46	.7
		2	46	.7
		3	46	.7
	Cleaning	None	3	6.6
		1	23	2.2
		2	23	.2
		3	23	.2
	Drying	None	5	13
		1	5	1.94
		2	5	1.94
		3	5	.65
	Shipping	None	5	130
		1	7.5	2.2
		2	7.5	.2
		3	7.5	.2
Storage Elevator Processors (wheat mill, dry corn mill, rice mill, soybean processor, wet corn mill)	Receiving	None	1.5	21.6
		1	7.5	4.0
		2	7.5	.4
		3	7.5	.4
	Handling	None	46	7.7
		1	46	3.8
		2	46	.38
		3	46	.38
	Drying	None	5	6.5
		1	5	.97
		2	5	.97
		3	5	.32

model. The dispersion estimates were made through application of the Single Source (CRSTER) Model. Given a year of hourly meteorological data, the model estimates maximum 1-hour, 3-hour, 24-hour, and annual ground-level concentrations. It must be realized that the short-term values are the maximums for the year in question. During certain years the maximum values will likely be somewhat higher, due to different sequences of meteorological conditions.

The formulation of an appropriate set of source input data for the model was simplified by the fact that there is no significant plume rise from the source. Thus, it was only necessary to account for the fact that the particulate "plume" from such a facility has a finite initial width and thickness.

In estimating the appropriate "initial plume width," it is recognized that the actual points of emission due to each operation are not distributed over the entire 100 x 250 meter area discussed earlier. However, once the effluents leave their respective sources, they are probably subjected to considerable turbulent mixing due to the presence of large structures and are likely to be dispersed over much of the above-mentioned area. Therefore, effluents from all operations are assumed to be distributed over the entire area. The initial plume width input to the Single Source Model was based on that assumption. The smaller of the two facility dimensions (100 meters) was used for all cases (Table D-2) and for all wind directions. In

Table D-2. Emission Rate, Average Emisson Height (weighted by emission rate), and Assumed Initial Plume Dimensions for Each Type of Grain Elevator and Level of Emission Control

Type of Grain Elevator	Level of Emission Control	Total Emission Rate (g/sec)	Average Emission Height (m)	Assumed Initial Plume Thickness (m)	Assumed Initial Plume Width (m)
Country Elevator	None	19.7	10	20	100
	1	3.3	13	25	100
	2	1.2	7.4	15	100
	3	0.55	9.8	20	100
High Through-Put	None	47.6	9.5	20	100
	1	4.7	8.3	15	100
	2	2.3	7.8	15	100
	3	1.0	11	20	100
Inland Terminal	None	213	32	64	100
	1	8.7	12	25	100
	2	3.2	13	25	100
	3	1.9	20	40	100
Port Terminal	None	400	18	40	100
	1	8.6	14	30	100
	2	3.4	15	30	100
	3	2.2	20	40	100
Storage Elevator	None	35.8	12	25	100
	1	8.8	23	40	100
	2	1.8	14	25	100
	3	1.1	20	40	100

other words, a circular source was assumed in order to ensure reasonably conservative dispersion estimates downwind of the source. For computational purposes, the initial cross-wind pollutant distribution is assumed to be Gaussian.

To estimate the "initial plume thicknesses" for each type of grain elevator and level of emission control, emission heights listed in Table D-1 were utilized. The heights were weighted by the respective emission rates, and a weighted average emission height was determined for each grain elevator and level of emission control (Table D-2). The initial plume thicknesses were assumed to be approximately twice the weighted average emission heights; i.e., the initial vertical spread of each plume is assumed to extend from ground level to twice the weighted average emission height. That assumption is considered valid in light of the prevalent atmospheric turbulence and downwash conditions at the facilities under study.

The initial horizontal and vertical pollutant distributions were assumed to be Gaussian to facilitate the utilization of virtual point source approximations. Such approximations were necessary because the Single Source Model only handles "point" sources, whereas the effluent plumes from the sources in question have finite initial horizontal and vertical dimensions that must be accounted for. Dispersion coefficients for Pasquill-Gifford stability Class D were used in the computation of the virtual point source distances.

The meteorological data used in the analysis were chosen from locations where effluent dispersion from grain elevator facilities would result in relatively high concentrations. All meteorological data were from the year 1964. That is the only year for which data suitable as input to the model are directly available. For all but the port facility analyses, meteorological data from several National Weather Service Stations in the heart of the grain belt were examined. Surface stability-wind data from Omaha, Nebraska were finally chosen because of the relatively skewed wind rose at that location. The mixing height data were obtained from the nearest upper air station (Topeka, Kansas) for which such information is readily available. The high frequency of wind from a single direction at Omaha should cause estimated maximum ambient pollutant concentrations at that station to be higher than at most other grain belt locations. For the port facilities, surface meteorological data from several Great Lakes, Gulf, and Pacific Coast locations were considered. Portland, Oregon was finally chosen because of the relatively skewed wind rose at that location. Upper air data in this latter case were obtained from Salem, Oregon, which is the nearest station providing such information.

Table D-3 presents the estimated maximum ambient particulate concentrations at specified distances downwind of the five types of grain elevator facilities considered in the analysis. Note that a considerable degree of emission control would be required for the national

Table D-3 - Estimated Ambient Ground-Level Particulate Concentrations at Specified Distances* Downwind of Grain Elevator Facilities

Type of Grain Elevator	Level of Emission Control	Total Emission Rate (g/sec)	Averaging Time	Particulate Concentration (ug/m^3)		
				0.3 km	2 km	20 km
Country Elevator	none	19.7	Day	1000	100	10
			Year	79	9	< 1
	1	3.3	Day	150	17	2
			Year	11	2	< 1
	2	1.2	Day	64	6	< 1
			Year	5	< 1	< 1
	3	0.55	Day	29	3	< 1
			Year	2	< 1	< 1
High Through-Put	none	47.6	Day	> 1000	250	23
			Year	100	21	1
	1	4.7	Day	250	25	2
			Year	19	2	< 1
	2	2.3	Day	120	12	1
			Year	9	1	< 1
	3	1.0	Day	53	5	< 1
			Year	4	< 1	< 1
Inland Terminal	none	213	Day	> 1000	> 1000	100
			Year	> 300	94	5
	1	8.7	Day	390	46	4
			Year	30	4	< 1
	2	3.2	Day	140	17	2
			Year	11	1	< 1
	3	1.9	Day	70	10	< 1
			Year	6	< 1	< 1
Port Terminal	none	400	Day	> 1000	> 1000	140
			Year	> 300	180	8
	1	8.6	Day	340	34	3
			Year	28	4	< 1
	2	3.4	Day	140	14	1
			Year	11	2	< 1
	3	2.2	Day	62	9	< 1
			Year	6	< 1	< 1
Storage Elevator	none	35.8	Day	> 1000	190	17
			Year	120	16	< 1
	1	8.8	Day	330	47	4
			Year	26	4	< 1
	2	1.8	Day	81	10	< 1
			Year	6	< 1	< 1
	3	1.1	Day	41	6	< 1
			Year	3	< 1	< 1

*Distances are as measured from the center of each facility

ambient air quality standards for particulates to be met in the vicinity of all the grain elevator facilities studied. If the fugitive emission and aerodynamic downwash problems at those facilities were eliminated by venting the emissions into well-designed stacks, the ambient standards could be met with considerably less emission control.

TECHNICAL REPORT DATA
(Please read Instructions on the reverse before completing)

1. REPORT NO.	2.	3. RECIPIENT'S ACCESSION NO.
4. TITLE AND SUBTITLE Standards Support and Environmental Impact Statement, Volume 1: Proposed Standards of Performance for the Grain Elevator Industry		5. REPORT DATE January 1977 6. PERFORMING ORGANIZATION CODE
7. AUTHOR(S)		8. PERFORMING ORGANIZATION REPORT NO.
9. PERFORMING ORGANIZATION NAME AND ADDRESS U.S. Environmental Protection Agency Office of Air Quality Planning and Standards Research Triangle Park, N. C. 27711		10. PROGRAM ELEMENT NO. 11. CONTRACT/GRANT NO.
12. SPONSORING AGENCY NAME AND ADDRESS		13. TYPE OF REPORT AND PERIOD COVERED 14. SPONSORING AGENCY CODE

15. SUPPLEMENTARY NOTES Volume 1 discusses the proposed standards and the resulting environmental and economic effects. Volume 2, to be published when the standards are promulgated, will contain a summary of public comments, EPA responses, and a discussion of differences between the proposed and promulgated standards.

16. ABSTRACT

Standards of performance to control particulate matter emissions from new and modified grain elevators in the U.S. are being proposed under section 111 of the Clean Air Act. The proposed standards limit emissions of particulate matter from the following affected facilities and their air pollution control devices: truck loading and unloading stations, railroad hopper car and boxcar loading and unloading stations, equipment at barge and ship unloading stations, barge and ship loading stations, all grain handling operations, and grain dryers. This document contains information on the grain elevator industry and emission control technology, a discussion of the selected emission limitations and the supporting data, and the alternatives which were considered, and analyses of the environmental and economic impacts of the proposed standards.

17. KEY WORDS AND DOCUMENT ANALYSIS

a. DESCRIPTORS	b. IDENTIFIERS/OPEN ENDED TERMS	c. COSATI Field/Group
Air pollution control equipment Air pollution Grain elevators Standards of performance Pollution control	Air pollution control Fabric filter Baghouse Fugitive emissions Particulate matter	

18. DISTRIBUTION STATEMENT Unlimited. Available from Public Information Center (PM-215), Environmental Protection Agency, Washington, D.C. 20460	19. SECURITY CLASS *(This Report)* Unclassified	21. NO. OF PAGES
	20. SECURITY CLASS *(This page)* Unclassified	22. PRICE

EPA Form 2220-1 (9-73)

ENVIRONMENTAL PROTECTION AGENCY
Technical Publications Branch
Office of Administration
Research Triangle Park, North Carolina 27711

OFFICIAL BUSINESS
AN EQUAL OPPORTUNITY EMPLOYER

POSTAGE AND FEES PAID
ENVIRONMENTAL PROTECTION AGENCY
EPA - 335

SPECIAL FOURTH-CLASS RATE
BOOK

U.S.MAIL

Return this sheet if you do NOT wish to receive this material ☐ or if change of address is needed ☐. (Indicate change, including ZIP code.)

PUBLICATION NO. EPA-450/2-77-001a