Note: This is a reference cited in *AP 42, Compilation of Air Pollutant Emission Factors, Volume I Stationary Point and Area Sources.* AP42 is located on the EPA web site at www.epa.gov/ttn/chief/ap42/

The file name refers to the reference number, the AP42 chapter and section. The file name "ref02_c01s02.pdf" would mean the reference is from AP42 chapter 1 section 2. The reference may be from a previous version of the section and no longer cited. The primary source should always be checked.

AP-42 Section Number: **9.9.1**

Reference Number: **25**

Title: **Results Of Particulate Emission Compliance Testing At The Peavey Company In Valley City, N.D. Conducted March 16-18, 1977**

Interpoll, Inc.

April 1977

AP-42 Section 9.9.1
Reference 25
Report Sect.
Reference

Interpoll Inc.
1996 West County Road C
St. Paul, Minnesota 55113
(612) 636-6866

RESULTS OF PARTICULATE EMISSION COMPLIANCE TESTING AT THE PEAVEY COMPANY IN VALLEY CITY, NORTH DAKOTA CONDUCTED MARCH 16-18, 1977

Submitted to:

PEAVEY COMPANY
Technical Center
11 Peavey Road
Chaska, Minnesota 55318

Approved by:

Perry Lonnes

Perry Lonnes, Ph.D.
Director of Environmental
Measurements Section

Report Number 7-297
April 15, 1977

TABLE OF CONTENTS

	SYMBOLS AND ABBREVIATIONS	III
1	INTRODUCTION	1
2	SUMMARY	3
3	RESULTS	9
	3.1 Results of Gas Analyses - Method 3	
	3.1.1 Test No. 1 - Carter Cleaner No. 255 - Cyclone Outlet	11
	3.1.2 Test No. 2 - Crippen Cleaner No. 245 - Cyclone Outlet	12
	3.1.3 Test No. 3 - Crippen Cleaner No. 312 - Cyclone Outlet	13
	3.1.4 Test No. 4 - Pellet Cooler No. 51 Cyclone	14
	3.2 Results of Particle Concentration Determination - Method 5	
	3.2.1 Test No. 1 - Carter Cleaner No. 255	16
	3.2.2 Test No. 2 - Crippen Cleaner No. 245	17
	3.2.3 Test No. 3 - Crippen Cleaner No. 312	18
	3.2.4 Test No. 4 - Pellet Cooler No. 51 Cyclone	19
	APPENDIX A - Results of Preliminary Measurements	
	APPENDIX B - Location of Sampling Ports and Traverse Points	
	APPENDIX C - Field Data Sheets	
	APPENDIX D - Process Rate Data	
	APPENDIX E - Visible Emission Certificate	
	APPENDIX F - Procedures	
	APPENDIX G - Sampling Train Description	
	APPENDIX H - Sampling Train Calibration Data	

SYMBOLS AND ABBREVIATIONS

ACFM	actual cubic feet per minute
DEG-F	degrees Fahrenheit
FT/SEC	feet per second
GR/ACF	grains per actual cubic foot
GR/SCF	grains per dry standard cubic foot
g	gram
HRS	hours
IN.	inches
IN. HG.	inches of mercury
IN. WC.	inches of water
LB	pound
LB/HR	pounds per hour
MBTU	million British Thermal Units heat input
microns (μm)	micrometer
MIN	minutes
SCFM	standard cubic foot of dry gas per minute
SQ. FT.	square feet
V/V	percent by volume
mg/DSCM	milligrams per dry standard cubic meter
LB/DSCF	pounds per dry standard cubic foot
MW/HR	megawatts per hour
ohm-cm	ohm-centimeter
HP	horsepower
PSI	pounds per square inch

Standard conditions are defined as 70°F and 29.92 in. of mercury pressure.

I INTRODUCTION

On March 15, 16, 17 and 18, 1977, Interpoll Inc. conducted particulate emission compliance tests on Cyclone No. 255; Cyclone No. 245; Cyclone No. 312C; and Cyclone No. 51 at the Peavey Company elevator and feed plant near Valley City, North Dakota. On-site work was accomplished by Messrs L. Jennings and J. Stock of Interpoll Inc. Coordination between plant operations and the testing team was provided by Messrs Jerry Meyer and Don Marpe of the Peavey Company. Testing was witnessed by Messrs Kevin Keimele and Jeffrey Burgess of the North Dakota State Department of Health.

Three particulate determinations were conducted on each of the sources in accordance with EPA Methods 1-5 CFR Title 40, Part 60, Appendix A. A preliminary determination of the gas linear velocity was made at each source to allow selection of the proper nozzle size for the initial test. A sampling train which meets or exceeds specifications of the above-cited reference was used to isokinetically extract particulate samples by means of a heated, glass-lined probe. Visual determinations of plume opacity were conducted by a certified observer.

Two test ports were located 90° apart on each of the circular ducts in accordance with EPA Method 1 of the previously cited reference. The test ports on the Cyclone No. 255 were 5.75 duct diameters downstream and 1.45 diameters upstream from any flow disturbance. Test ports on Cyclone No. 245 were 5.05 duct diameters downstream and 1.25 diameters upstream from any flow disturbance. Test ports on Cyclone No. 312C were 5.05 duct diameters downstream and 1.35 diameters upstream from any flow disturbance. Test ports on Cyclone No. 51 were 2.0 duct diameters downstream and 0.8 diameters upstream from any flow disturbance (see Appendix B).

A 28-point traverse was used in Test 1, Cyclone No. 255; each traverse point was sampled three minutes to give a total sampling time of 84 minutes per test run. A 20-point traverse was used in Test 2, Cyclone No. 245 and in Test 3, Cyclone No. 312C; each traverse point was sampled three minutes to

2 SUMMARY

The important results of each particulate emissions test are summarized in Tables 1-4. Detailed results appear in Section 3. The particulate emission rates (LB/HR) and particulate emission factors (LB/TON of material processed) appear below:

Four separate sources!

	Particulate Emission Rate (LB/HR)	Process Rate (TON/HR)	Particulate Emission Factor (LB/TON)
~~TEST 1~~ (Carter Cleaner Cyclone No. 255)			
Run 1	2.42	6.57	.368
Run 2	3.32	6.20	.535
Run 3	3.73	6.60	.568
Average	3.16	6.46	.490
~~TEST 2~~ (Crippen Cleaner Cyclone No. 245)			
Run 1	1.91	6.36	.300
Run 2	1.54	7.59	.203
Run 3	1.82	7.64	.238
Average	1.76	7.20	.247
TEST 3 (Crippen Cleaner Cyclone No. 312C)			
Run 1	.42	5.31	.079
Run 2	.44	6.50	.068
Run 3	.69	6.67	.103
Average	.52	6.16	.083
TEST 4 (Pellet Cooler Cyclone No. 51)			
Run 1	3.65	5.09	.717
Run 2	7.44	4.51	1.65
Run 3	6.01	4.78	1.26
Average	5.70	4.79	1.21

Process rate information was supplied by the Peavey Company. For detailed process rate information, refer to Appendix D.

Visual determinations of plume opacity were performed during each test by an EPA-certified observer. The time-weighted average plume opacity from Cyclone #255 was 14%. All other units tested had an average plume opacity of less than 5%.

No difficulties were encountered either in the field or laboratory evaluations. Based on a critical examination of the data and results, it is our opinion that the emission rates reported herein are accurate and reflect the actual emission rates existing at the time of the tests.

Table I. Summary of Results of Particulate Emissions Testing on the Carter Cleaner Cyclone No. 255 at the Peavey Company in Valley City, North Dakota Conducted March 15, 1977.

ITEM	PRELIMINARY	RUN 1	RUN 2	RUN 3
Volumetric flow				
ACTUAL (ACFM)	4300	4100	4200	4000
STANDARD DRY (SCFM)	4200	4100	4100	4000
Gas temperature (DEG-F)	38	37	40	43
Gas moisture content (% v/v)	0.8	0.8	0.5	1.1
Process rate (TON/HR)		6.57	6.20	6.60
Type of grain processed		Oats	Oats	Oats
Particulate concentration				
ACTUAL (GR/ACF)		.067	.091	.106
STANDARD (GR/SCF)		.069	.094	.110
Isokinetic variation (%)		101.3	101.1	100.5
Particulate emission rate (LB/HR)		2.42	3.32	3.75
Particulate emission factor (LB/TON processed)		.368	.535	.568

Table 2. Summary of Results of Particulate Emissions Testing on the Crippen Cleaner Cyclone No. 245 at the Peavey Company in Valley City, North Dakota Conducted March 16, 1977.

ITEM	PRELIMINARY	RUN 1	RUN 2	RUN 3
Volumetric flow				
ACTUAL (ACFM)	6100	6000	6100	6100
STANDARD DRY (SCFM)	6100	6100	6100	6200
Gas temperature (DEG-F)	32	33	36	38
Gas moisture content (% v/v)	0.8	0.6	0.8	1.0
Process rate (TON/HR)		6.36	7.59	7.64
Type of grain processed		Oats	Oats	Oats
Particulate concentration				
ACTUAL (GR/ACF)		.036	.029	.034
STANDARD (GR/SCF)		.036	.029	.035
Isokinetic variation (%)		99.3	100.6	101.3
Particulate emission rate (LB/HR)		1.91	1.54	1.82
Particulate emission factor (LB/TON processed)		.300	.203	.238

Table 3. Summary of Results of Particulate Emissions Testing on Crippen Cleaner Cyclone No. 312C at the Peavey Company in Valley City, North Dakota Conducted March 17, 1977.

ITEM	PRELIMINARY	RUN 1	RUN 2	RUN 3
Volumetric flow				
ACTUAL (ACFM)	5600	5500	5300	5200
STANDARD DRY (SCFM)	5500	5500	5300	5200
Gas temperature (DEG-F)	38	38	39	39
Gas moisture content (% v/v)	0.5	0.5	0.3	0.6
Process rate (TON/HR)		5.31	6.50	6.67
Type of grain processed		Wheat	Wheat	Wheat
Particulate concentration				
ACTUAL (GR/ACF)		.0087	.0094	.0151
STANDARD (GR/SCF)		.0089	.0097	.0155
Isokinetic variation (%)		101.5	101.3	101.5
Particulate emission rate (LB/HR)		0.42	0.44	0.69
Particulate emission factor (LB/TON processed)		.079	.068	.103

Table 4. Summary of Results of Particulate Emissions Testing on the Pellet Cooler Cyclone No. 51 at the Peavey Company in Valley City, North Dakota Conducted March 18, 1977.

ITEM	PRELIMINARY	RUN 1	RUN 2	RUN 3
Volumetric flow				
ACTUAL (ACFM)	16700	16200	16600	16400
STANDARD DRY (SCFM)	15600	15500	15800	15500
Gas temperature (DEG-F)	58	57	62	63
Gas moisture content (% v/v)	0.8	0.4	0.9	1.2
Process rate (TON/HR)		5.09	4.51	4.78
Type of product in process		Grain Stretcher 5600	Dairy Ration 5390	Hog Finisher 4241
Particulate concentration				
ACTUAL (GR/ACF)		.026	.051	.042
STANDARD (GR/SCF)		.028	.055	.045
Isokinetic variation (%)		100.9	101.8	102.8
Particulate emission rate (LB/HR)		3.65	7.44	6.01
Particulate emission factor (LB/TON processed)		.717	1.65	1.26

3 RESULTS

The results of all field and laboratory evaluations are presented in this section. Gas composition results are presented first, followed by the computer printout of particulate emission data. Preliminary measurements including traverse point description are given in Appendices A & B.

The results have been calculated on a CDC 3300 computer using standard Fortran programs. EPA-published equations have been used as the basis of the calculation techniques in these programs. It should be noted in interpreting these results that the particulate emission rates have been calculated by both the "concentration X flow" and the "ratio of areas" methods and the average reported. The average is the best estimate of the true value, since the bias introduced by anisokinetic sampling is approximately equal but of opposite sign in the two calculation techniques and thus cancels in the average.

3.1 Results of Gas Analyses - Method 3 (Percent by Volume)

3.1.1 TEST NO. 1 CARTER CLEANER NO.255-CYCLONE OUTLET

RESULTS OF GAS ANALYSES -- METHOD 3 (PERCENT BY VOLUME)

	RUN 1	RUN 2	RUN 3
DRY BASIS (ORSAT)			
CARBON DIOXIDE	0.00	0.00	0.00
OXYGEN	20.90	20.90	20.90
CARBON MONOXIDE	0	0	0
NITROGEN	79.10	79.10	79.10
WET BASIS (ORSAT)			
CARBON DIOXIDE	0.00	0.00	0.00
OXYGEN	20.73	20.78	20.68
CARBON MONOXIDE	0	0	0
NITROGEN	78.44	78.66	78.27
MOISTURE CONTENT	0.83	0.55	1.05
DRY MOLECULAR WEIGHT	28.84	28.84	28.84
WET MOLECULAR WEIGHT	28.75	28.78	28.72
SPECIFIC GRAVITY (RELATIVE TO AIR)	0.9930	0.9940	0.9921

3.1.2 TEST NO. 2 CRIPPEN CLEANER NO.245-CYCLONE OUTLET

RESULTS OF GAS ANALYSES -- METHOD 3 (PERCENT BY VOLUME)

	RUN 1	RUN 2	RUN 3
DRY BASIS (ORSAT)			
CARBON DIOXIDE	0.00	0.00	0.00
OXYGEN	20.90	20.90	20.90
CARBON MONOXIDE	0	0	0
NITROGEN	79.10	79.10	79.10
WET BASIS (ORSAT)			
CARBON DIOXIDE	0.00	0.00	0.00
OXYGEN	20.78	20.72	20.70
CARBON MONOXIDE	0	0	0
NITROGEN	78.65	78.43	78.33
MOISTURE CONTENT	0.56	0.84	0.97
DRY MOLECULAR WEIGHT	28.84	28.84	28.84
WET MOLECULAR WEIGHT	28.77	28.74	28.73
SPECIFIC GRAVITY (RELATIVE TO AIR)	0.9940	0.9929	0.9924

3.1.3 TEST NO. 3 CRIPPEN CLEANER NO.312 CYCLONE OUTLET

RESULTS OF GAS ANALYSES -- METHOD 3 (PERCENT BY VOLUME)

	RUN 1	RUN 2	RUN 3
DRY BASIS (ORSAT)			
CARBON DIOXIDE	0.00	0.00	0.00
OXYGEN	20.90	20.90	20.90
CARBON MONOXIDE	0	0	0
NITROGEN	79.10	79.10	79.10
WET BASIS (ORSAT)			
CARBON DIOXIDE	0.00	0.00	0.00
OXYGEN	20.90	20.84	20.77
CARBON MONOXIDE	0	0	0
NITROGEN	78.72	78.86	78.61
MOISTURE CONTENT	0.49	0.30	0.61
DRY MOLECULAR WEIGHT	28.84	28.84	28.84
WET MOLECULAR WEIGHT	28.78	28.80	28.77
SPECIFIC GRAVITY (RELATIVE TO AIR)	0.9942	0.9949	0.9938

3.1.4 TEST NO. 4 PELLET COOLER NO.51 CYCLONE

RESULTS OF GAS ANALYSES -- METHOD 3 (PERCENT BY VOLUME)

	RUN 1	RUN 2	RUN 3
DRY BASIS (ORSAT)			
CARBON DIOXIDE	0.00	0.00	0.00
OXYGEN	20.90	20.90	20.90
CARBON MONOXIDE	0	0	0
NITROGEN	79.10	79.10	79.10
WET BASIS (ORSAT)			
CARBON DIOXIDE	0.00	0.00	0.00
OXYGEN	20.81	20.71	20.65
CARBON MONOXIDE	0	0	0
NITROGEN	78.76	78.37	78.16
MOISTURE CONTENT	0.43	0.93	1.19
DRY MOLECULAR WEIGHT	28.84	28.84	28.84
WET MOLECULAR WEIGHT	28.79	28.74	28.71
SPECIFIC GRAVITY (RELATIVE TO AIR)	0.9944	0.9926	0.9916

3.2 Results of Particle Concentration Determination - Method 5

3.2.1 TEST NO. 1 CARTER CLEANER NO.255-CYCLONE OUTLET

RESULTS OF PARTICLE CONCENTRATION DETERMINATION - -METHOD 5

	RUN 1	RUN 2	RUN 3
DATE OF RUN	3/15/77	3/15/77	3/15/77
TIME RUN START/END(HRS)	1010/1156	1233/1416	1455/1635
PITOT TUBE COEFFICIENT	0.838	0.838	0.838
TOTAL MOISTURE IN GAS SAMPLE (GRAMS)	9.0	6.0	11.0
TOTAL PARTICULATE MATERIAL COLLECTED(GRAMS) *	0.2253	0.3087	0.3480
VOLUME THROUGH GAS METER (CF AT METER COND.)	50.75	51.19	49.30
TOTAL SAMPLING TIME (MIN)	84.0	84.0	84.0
NOZZLE DIAMETER (IN)	0.181	0.181	0.181
AVERAGE STACK GAS TEMPERATURE DURING DETERMINATION (DEG-F)	37.	40.	43.
VOLUMETRIC FLOW**			
ACTUAL (ACFM)	4120	4150	4035
DRY STANDARD (DSCFM)	4125	4140	3984
ISOKINETIC VARIATION (%)	101.3	101.1	100.5
PARTICLE CONCENTRATION			
ACTUAL (GR/ACF)	0.0671	0.0913	0.1062
DRY STANDARD (GR/DSCF)	0.0685	0.0936	0.1099
PARTICLE MASS FLOW (LB/HR)	2.42	3.32	3.75

* DRY CATCH ONLY

** CALCULATED ON THE BASIS OF VELOCITY PRESSURES MEASURED DURING THIS PARTICULATE DETERMINATION.

3.2.2 TEST NO. 2 CRIPPEN CLEANER NO.245-CYCLONE OUTLET

RESULTS OF PARTICLE CONCENTRATION DETERMINATION - -METHOD 5

	RUN 1	RUN 2	RUN 3
DATE OF RUN	3/16/77	3/16/77	3/16/77
TIME RUN START/END(HRS)	935/1037	1037/1140	1205/1308
PITOT TUBE COEFFICIENT	0.838	0.838	0.838
TOTAL MOISTURE IN GAS SAMPLE (GRAMS)	4.0	6.0	7.0
TOTAL PARTICULATE MATERIAL COLLECTED(GRAMS) *	0.0783	0.0635	0.0753
VOLUME THROUGH GAS METER (CF AT METER COND.)	33.11	33.69	34.64
TOTAL SAMPLING TIME (MIN)	60.0	60.0	60.0
NOZZLE DIAMETER (IN)	0.181	0.181	0.181
AVERAGE STACK GAS TEMPERATURE DURING DETERMINATION (DEG-F)	33.	36.	38.
VOLUMETRIC FLOW**			
ACTUAL (ACFM)	6025	6051	6122
DRY STANDARD (DSCFM)	6141	6116	6150
ISOKINETIC VARIATION (%)	99.3	100.6	101.3
PARTICLE CONCENTRATION			
ACTUAL (GR/ACF)	0.0362	0.0290	0.0339
DRY STANDARD (GR/DSCF)	0.0362	0.0294	0.0345
PARTICLE MASS FLOW (LB/HR)	1.91	1.54	1.82

* DRY CATCH ONLY
** CALCULATED ON THE BASIS OF VELOCITY PRESSURES MEASURED DURING THIS PARTICULATE DETERMINATION.

3.2.3 TEST NO. 3 CRIPPEN CLEANER NO.312 CYCLONE OUTLET

RESULTS OF PARTICLE CONCENTRATION DETERMINATION - -METHOD 5

	RUN 1	RUN 2	RUN 3
DATE OF RUN	3/17/77	3/17/77	3/17/77
TIME RUN START/END(HRS)	927/1038	1100/1229	1308/1431
PITOT TUBE COEFFICIENT	0.838	0.838	0.838
TOTAL MOISTURE IN GAS SAMPLE (GRAMS)	5.0	3.0	6.0
TOTAL PARTICULATE MATERIAL COLLECTED(GRAMS) *	0.0279	0.0294	0.0461
VOLUME THROUGH GAS METER (CF AT METER COND.)	48.57	47.17	46.12
TOTAL SAMPLING TIME (MIN)	60.0	60.0	60.0
NOZZLE DIAMETER (IN)	0.181	0.181	0.181
AVERAGE STACK GAS TEMPERATURE DURING DETERMINATION (DEG-F)	38.	39.	39.
VOLUMETRIC FLOW**			
ACTUAL (ACFM)	5501	5346	5231
DRY STANDARD (DSCFM)	5497	5342	5207
ISOKINETIC VARIATION (%)	101.5	101.3	101.5
PARTICLE CONCENTRATION			
ACTUAL (GR/ACF)	0.0087	0.0094	0.0151
DRY STANDARD (GR/DSCF)	0.0089	0.0097	0.0155
PARTICLE MASS FLOW (LB/HR)	0.42	0.44	0.69

* DRY CATCH ONLY

** CALCULATED ON THE BASIS OF VELOCITY PRESSURES MEASURED DURING THIS PARTICULATE DETERMINATION.

3.2.4 TEST NO. 4 PELLET COOLER NO.51 CYCLONE

RESULTS OF PARTICLE CONCENTRATION DETERMINATION - -METHOD 5

	RUN 1	RUN 2	RUN 3
DATE OF RUN	3/18/77	3/18/77	3/18/77
TIME RUN START/END(HRS)	1037/1225	1308/1457	1615/1758
PITOT TUBE COEFFICIENT	0.838	0.838	0.838
TOTAL MOISTURE IN GAS SAMPLE (GRAMS)	5.0	11.0	14.0
TOTAL PARTICULATE MATERIAL COLLECTED(GRAMS) *	0.0969	0.1983	0.1610
VOLUME THROUGH GAS METER (CF AT METER COND.)	55.24	57.87	56.58
TOTAL SAMPLING TIME (MIN)	96.0	96.0	96.0
NOZZLE DIAMETER (IN)	0.181	0.181	0.181
AVERAGE STACK GAS TEMPERATURE DURING DETERMINATION (DEG-F)	57.	62.	63.
VOLUMETRIC FLOW**			
ACTUAL (ACFM)	16156	16626	16406
DRY STANDARD (DSCFM)	15516	15758	15467
ISOKINETIC VARIATION (%)	100.9	101.8	102.8
PARTICLE CONCENTRATION			
ACTUAL (GR/ACF)	0.0258	0.0511	0.0419
DRY STANDARD (GR/DSCF)	0.0275	0.0551	0.0454
PARTICLE MASS FLOW (LB/HR)	3.65	7.44	6.01

* DRY CATCH ONLY
** CALCULATED ON THE BASIS OF VELOCITY PRESSURES MEASURED DURING THIS PARTICULATE DETERMINATION.

APPENDIX A

RESULTS OF PRELIMINARY MEASUREMENTS

TEST NO. 1 CARTER CLEANER NO.255-CYCLONE OUTLET

RESULTS OF FLOW DETERMINATION -- METHOD 2

TIME AND DATE	935 HRS, 3/15/77
BAROMETRIC PRESSURE (UNCOMPENSATED IN.HG.)	28.24
PITOT TUBE COEFFICIENT	0.838
NUMBER OF SAMPLING PORTS	2
TOTAL NUMBER OF POINTS SAMPLED	28
DUCT OR STACK DIAMETER (IN.)	15.000
CROSS SECTIONAL AREA (SQ.FT)	1.23
DIRECTION OF FLOW	HORIZONTAL
STATIC PRESSURE (IN.WC.)	-7.00
AVERAGE GAS TEMPERATURE (DEG-F)	38.
ABSOLUTE GAS PRESSURE (IN.HG.)	27.73
AVERAGE MOISTURE CONTENT (V/V)	0.81
AVERAGE LINEAR VELOCITY (FT/SEC)	58.5
(STANDARD DEVIATION, FT/SEC)	5.8
VOLUMETRIC FLOW	
ACTUAL (ACFM)	4310
DRY STANDARD (SDCFM)	4216
MASS FLOW OF GAS - WET (LB/HR)	18973

TEST NO. 1 CARTER CLEANER NO.255-CYCLONE OUTLET

APPENDIX A -- POINT VELOCITY AND TEMPERATURE DATA

PORT/POINT	GAS TEMPERATURE (DEG-F)	LINEAR VELOCITY (FT/SEC)
A/ 1	38	60.6
A/ 2	38	52.7
A/ 3	38	59.3
A/ 4	38	61.9
A/ 5	38	64.5
A/ 6	38	61.9
A/ 7	38	57.9
A/ 8	38	56.3
A/ 9	38	56.5
A/10	38	57.4
A/11	38	59.3
A/12	38	63.2
A/13	38	64.5
A/14	38	64.5
B/ 1	38	51.2
B/ 2	38	50.6
B/ 3	38	53.0
B/ 4	38	51.2
B/ 5	38	49.6
B/ 6	38	48.6
B/ 7	38	48.6
B/ 8	38	59.3
B/ 9	38	61.9
B/10	38	64.5
B/11	38	64.5
B/12	38	64.5
B/13	38	69.2
B/14	38	61.9

TEST NO. 2 CRIPPEN CLEANER NO.245-CYCLONE OUTLET

RESULTS OF FLOW DETERMINATION -- METHOD 2

TIME AND DATE	845 HRS, 3/16/77
BAROMETRIC PRESSURE (UNCOMPENSATED IN.HG.)	28.46
PITOT TUBE COEFFICIENT	0.838
NUMBER OF SAMPLING PORTS	2
TOTAL NUMBER OF POINTS SAMPLED	20
DUCT OR STACK DIAMETER (IN.)	19.000
CROSS SECTIONAL AREA (SQ.FT)	1.97
DIRECTION OF FLOW	VERTICAL,DOWN
STATIC PRESSURE (IN.WC.)	-7.00
AVERAGE GAS TEMPERATURE (DEG-F)	32.
ABSOLUTE GAS PRESSURE (IN.HG.)	27.95
AVERAGE MOISTURE CONTENT (V/V)	0.79
AVERAGE LINEAR VELOCITY (FT/SEC)	52.0
(STANDARD DEVIATION, FT/SEC)	4.7
VOLUMETRIC FLOW	
ACTUAL (ACFM)	6148
DRY STANDARD (SDCFM)	6137
MASS FLOW OF GAS - WET (LB/HR)	27616

TEST NO. 2 CRIPPEN CLEANER NO.245-CYCLONE OUTLET

APPENDIX A -- POINT VELOCITY AND TEMPERATURE DATA

PORT/POINT	GAS TEMPERATURE (DEG-F)	LINEAR VELOCITY (FT/SEC)
A/ 1	32	51.6
A/ 2	32	56.0
A/ 3	32	63.8
A/ 4	32	55.1
A/ 5	32	52.2
A/ 6	32	51.3
A/ 7	32	51.6
A/ 8	32	53.1
A/ 9	32	54.3
A/10	32	53.1
B/ 1	32	43.4
B/ 2	32	44.4
B/ 3	32	49.1
B/ 4	32	45.8
B/ 5	32	46.8
B/ 6	32	50.7
B/ 7	32	52.8
B/ 8	32	56.0
B/ 9	32	56.5
B/10	32	53.4

TEST NO. 3 CRIPPEN CLEANER NO.312 CYCLONE OUTLET

RESULTS OF FLOW DETERMINATION -- METHOD 2

TIME AND DATE	915 HRS, 3/17/77
BAROMETRIC PRESSURE (UNCOMPENSATED IN.HG.)	28.06
PITOT TUBE COEFFICIENT	0.838
NUMBER OF SAMPLING PORTS	2
TOTAL NUMBER OF POINTS SAMPLED	20
DUCT OR STACK DIAMETER (IN.)	15.000
CROSS SECTIONAL AREA (SQ.FT)	1.23
DIRECTION OF FLOW	HORIZONTAL
STATIC PRESSURE (IN.WC.)	-7.20
AVERAGE GAS TEMPERATURE (DEG-F)	38.
ABSOLUTE GAS PRESSURE (IN.HG.)	27.53
AVERAGE MOISTURE CONTENT (V/V)	0.47
AVERAGE LINEAR VELOCITY (FT/SEC)	76.1
(STANDARD DEVIATION, FT/SEC)	3.8
VOLUMETRIC FLOW	
ACTUAL (ACFM)	5605
DRY STANDARD (SDCFM)	5463
MASS FLOW OF GAS - WET (LB/HR)	24535

TEST NO. 3 CRIPPEN CLEANER NO.312 CYCLONE OUTLET

APPENDIX A -- POINT VELOCITY AND TEMPERATURE DATA

PORT/POINT	GAS TEMPERATURE (DEG-F)	LINEAR VELOCITY (FT/SEC)
A/ 1	38	89.6
A/ 2	38	71.7
A/ 3	38	77.5
A/ 4	38	75.4
A/ 5	38	76.1
A/ 6	38	72.4
A/ 7	38	72.8
A/ 8	38	77.1
A/ 9	38	76.1
A/10	38	73.9
B/ 1	38	80.2
B/ 2	38	75.4
B/ 3	38	77.9
B/ 4	38	77.1
B/ 5	38	77.1
B/ 6	38	76.1
B/ 7	38	75.0
B/ 8	38	74.4
B/ 9	38	73.9
B/10	38	72.8

JOB: PEAVEY CO.

INTERPOLL REPORT NO. 7-297

TEST NO. 4 PELLET COOLER NO.51 CYCLONE

RESULTS OF FLOW DETERMINATION -- METHOD 2

TIME AND DATE	900 HRS, 3/18/77
BAROMETRIC PRESSURE (UNCOMPENSATED IN.HG.)	28.08
PITOT TUBE COEFFICIENT	0.838
NUMBER OF SAMPLING PORTS	2
TOTAL NUMBER OF POINTS SAMPLED	48
DUCT OR STACK DIAMETER (IN.)	30.000
CROSS SECTIONAL AREA (SQ.FT)	4.91
DIRECTION OF FLOW	HORIZONTAL
STATIC PRESSURE (IN.WC.)	-7.00
AVERAGE GAS TEMPERATURE (DEG-F)	58.
ABSOLUTE GAS PRESSURE (IN.HG.)	27.57
AVERAGE MOISTURE CONTENT (V/V)	0.85
AVERAGE LINEAR VELOCITY (FT/SEC)	58.4
(STANDARD DEVIATION, FT/SEC)	4.8
VOLUMETRIC FLOW	
ACTUAL (ACFM)	17212
DRY STANDARD (SDCFM)	16087
MASS FLOW OF GAS - WET (LB/HR)	72414

JOB: PEAVEY CO.

INTERPOLL REPORT NO. 7-297

TEST NO. 4 PELLET COOLER NO.51 CYCLONE

APPENDIX A -- POINT VELOCITY AND TEMPERATURE DATA

PORT/POINT	GAS TEMPERATURE (DEG-F)	LINEAR VELOCITY (FT/SEC)
A/ 1	58	52.4
A/ 2	58	52.4
A/ 3	58	56.1
A/ 4	58	60.7
A/ 5	58	53.0
A/ 6	58	47.3
A/ 7	58	50.7
A/ 8	58	53.0
A/ 9	58	54.9
A/10	58	57.0
A/11	58	59.3
A/12	58	60.7
A/13	58	60.7
A/14	58	63.4
A/15	58	60.7
A/16	58	61.5
A/17	58	62.0
A/18	58	62.8
A/19	58	63.4
A/20	58	63.4
A/21	58	64.1
A/22	58	64.7
A/23	58	64.7
A/24	58	64.7
B/ 1	58	52.4
B/ 2	58	47.3
B/ 3	58	48.7
B/ 4	58	55.2
B/ 5	58	58.1
B/ 6	58	60.9
B/ 7	58	63.4
B/ 8	58	65.9
B/ 9	58	64.7
B/10	58	63.4
B/11	58	62.0
B/12	58	60.7
B/13	58	57.8

JOB: PEAVEY CO.

INTERPOLL REPORT NO. 7-297

TEST NO. 4 PELLET COOLER NO.51 CYCLONE

APPENDIX A -- POINT VELOCITY AND TEMPERATURE DATA

PORT/POINT	GAS TEMPERATURE (DEG-F)	LINEAR VELOCITY (FT/SEC)
B/14	58	59.3
B/15	58	57.8
B/16	58	57.0
B/17	58	57.0
B/18	58	54.9
B/19	58	56.1
B/20	58	57.8
B/21	58	60.9
B/22	58	57.8
B/23	58	57.8
B/24	58	55.5

APPENDIX B

LOCATION OF SAMPLING PORTS
AND
TRAVERSE POINTS

CARTER CLEANER #255

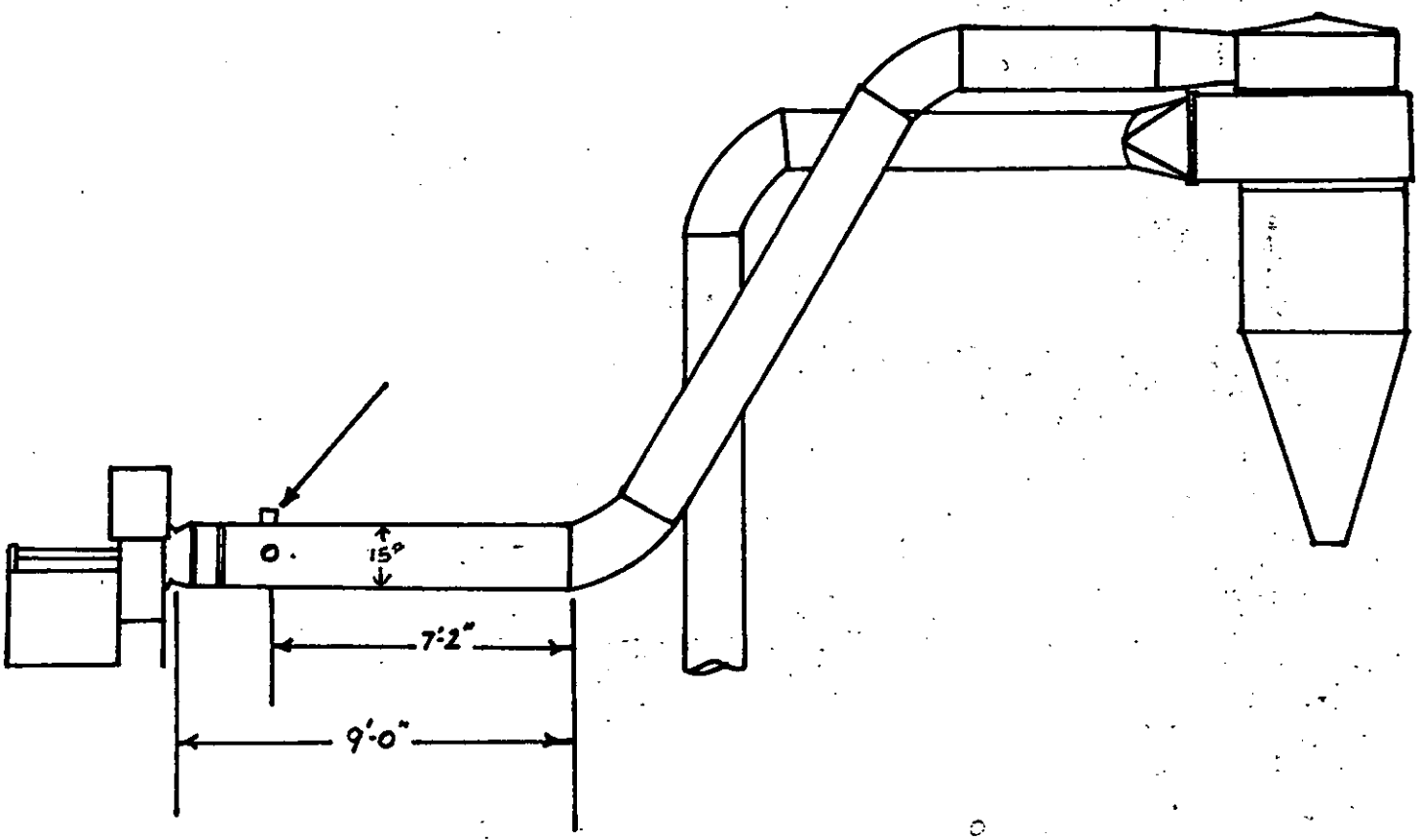

ELEVATION VIEW

INTERPOLL INC.

JOB PEAVEY CO.
INTERPOLL REPORT NO. 7-297
APPENDIX B

LOCATION OF TRAVERSE POINTS

TEST NO. 1

LOCATION - CARTER CLEANER NO.255

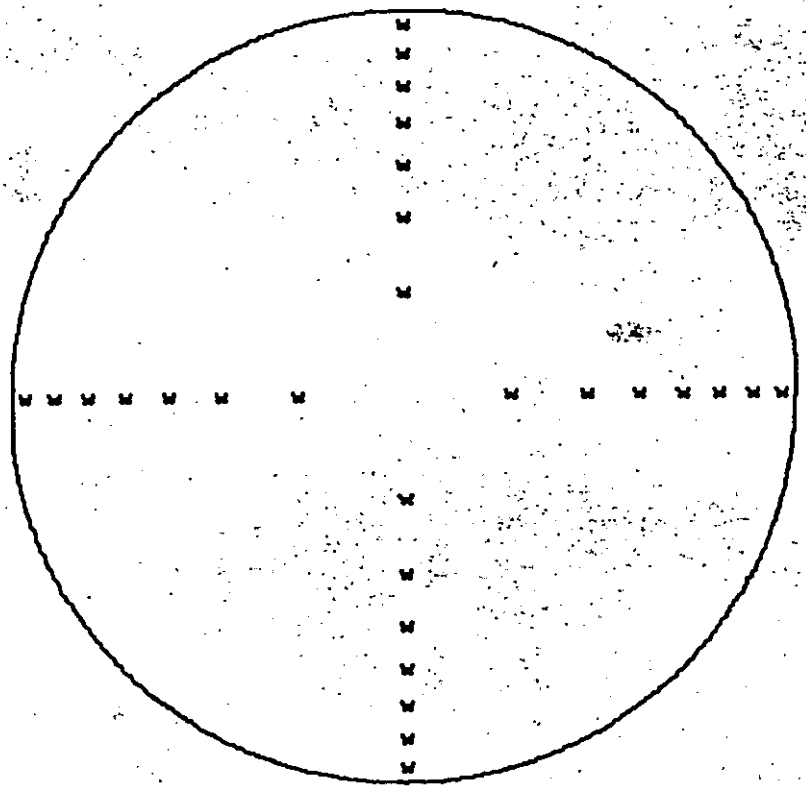

DIAMETER (IN.)	15.0
NUMBER OF PORTS	2
NUMBER OF POINTS TRAVERSED	28

CRIPPEN CLEANER #245

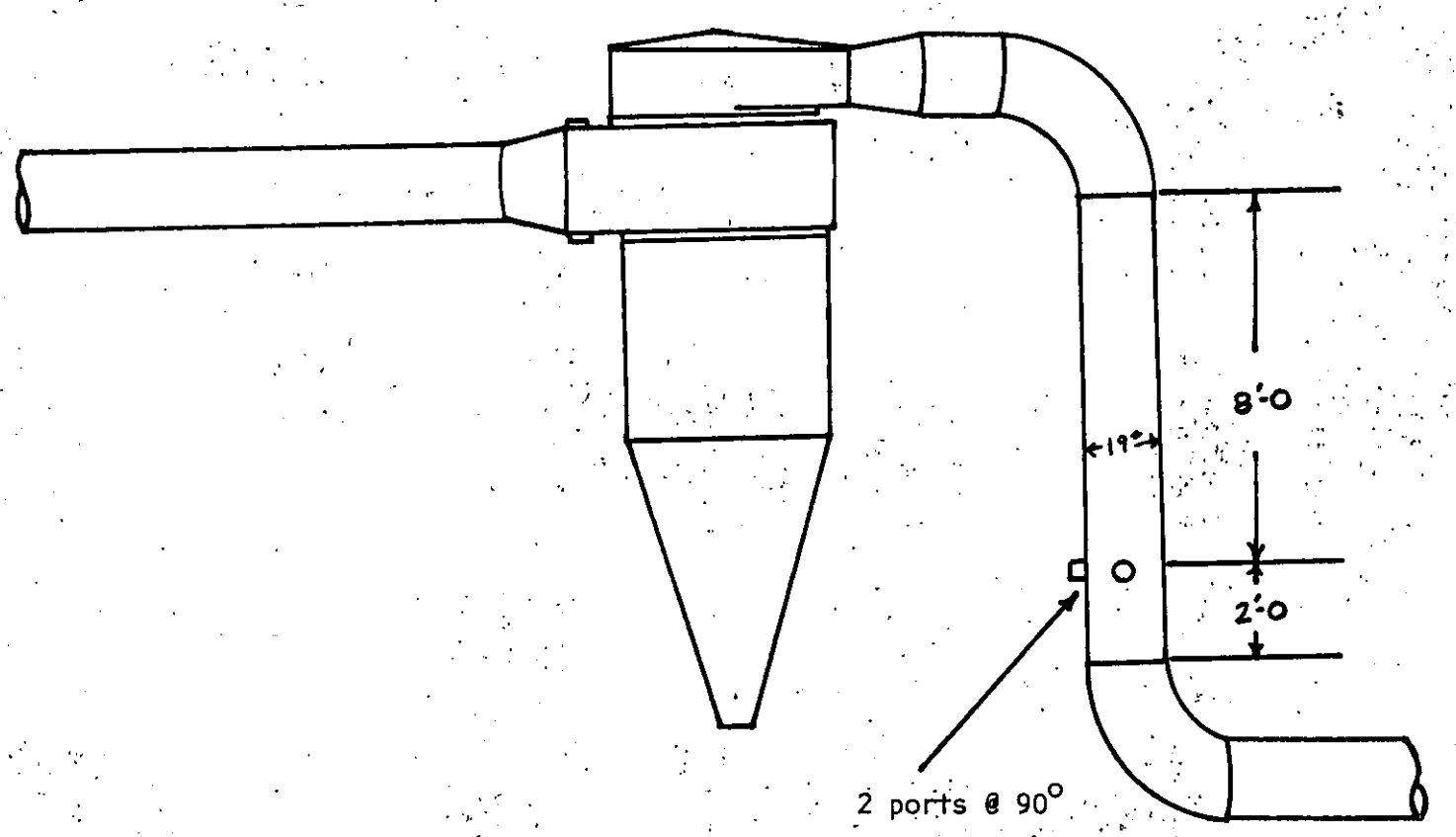

ELEVATION VIEW

INTERPOLL INC.

LOCATION OF TRAVERSE POINTS

TEST NO. 2

LOCATION - CRIPPEN CLEANER NO.245

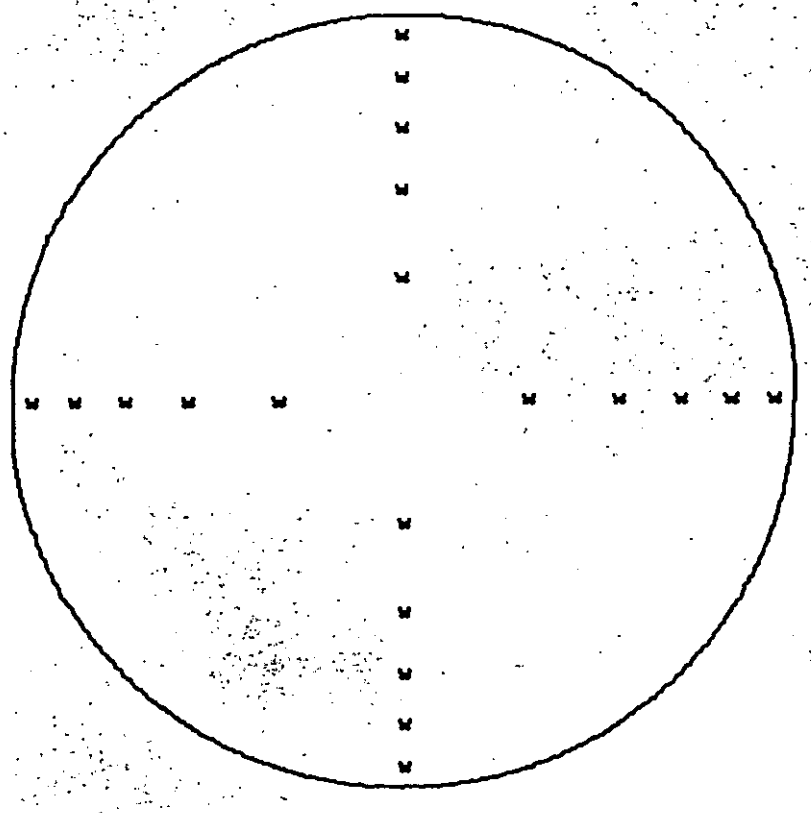

DIAMETER (IN.)	19.0
NUMBER OF PORTS	2
NUMBER OF POINTS TRAVERSED	20

CRIPPEN CLEANER #312C

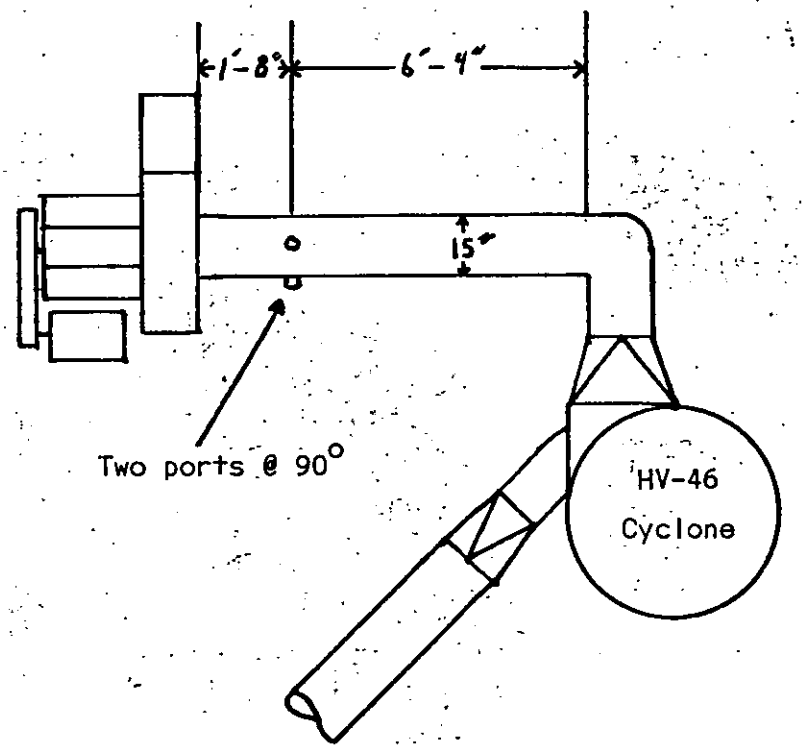

PLAN VIEW

JOB PEAVEY CO.
INTERPOLL REPORT NO. 7-297
APPENDIX B

LOCATION OF TRAVERSE POINTS

TEST NO. 3

LOCATION - CRIPPEN CLEANER NO. 312

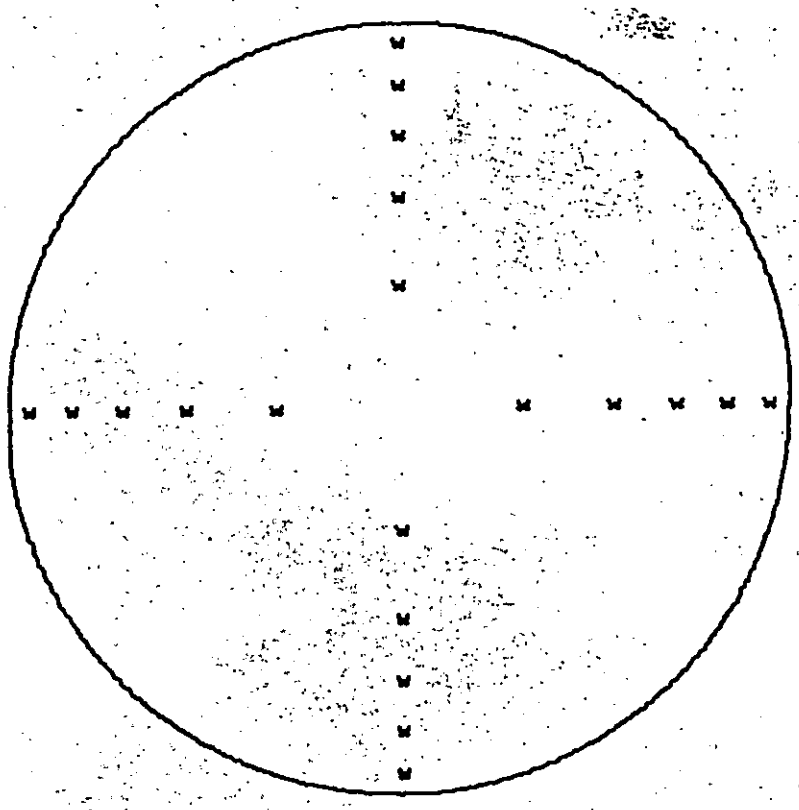

DIAMETER (IN.)	15.0
NUMBER OF PORTS	2
NUMBER OF POINTS TRAVERSED	20

PELLET COOLER #51

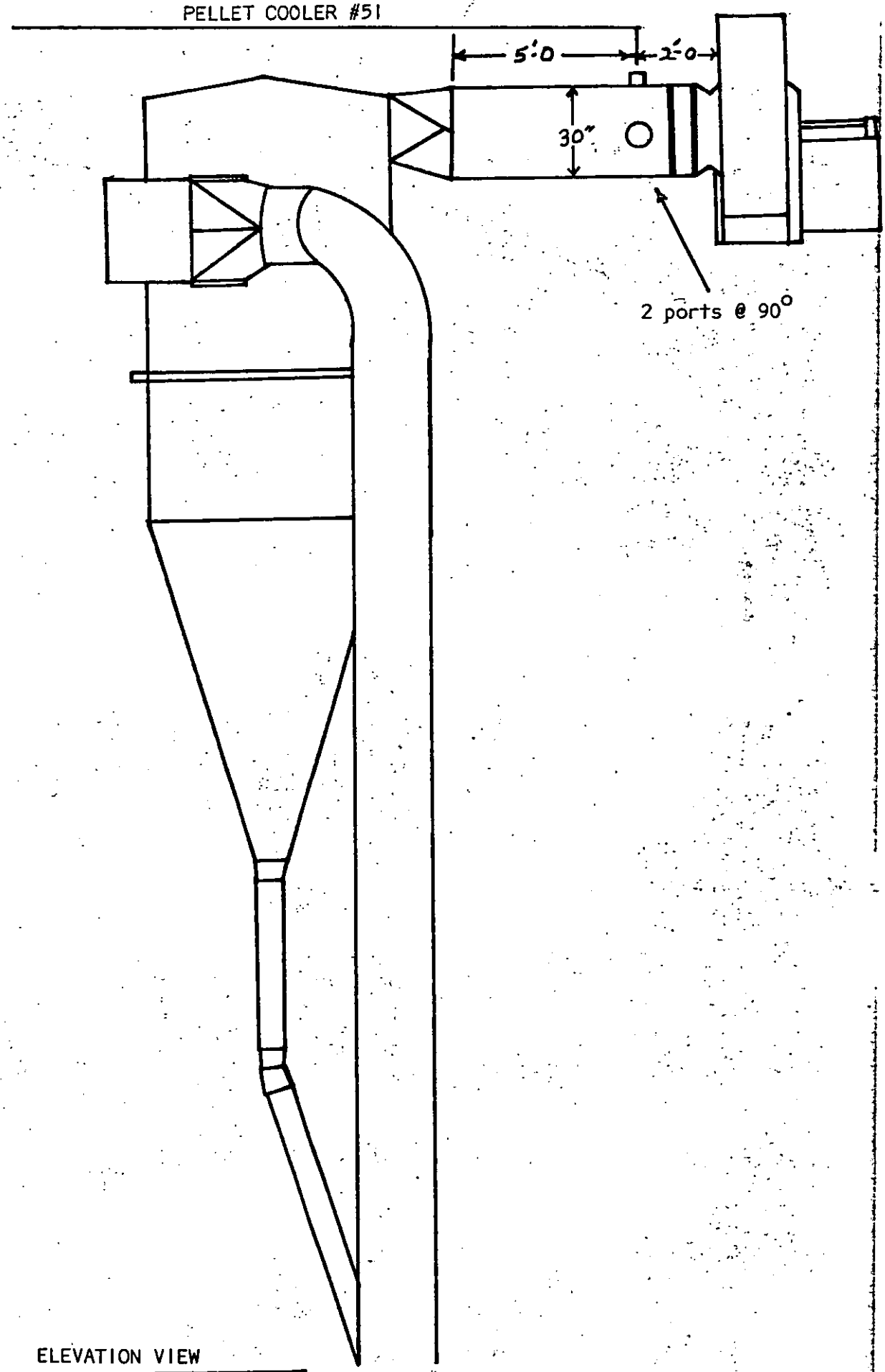

ELEVATION VIEW

LOCATION OF TRAVERSE POINTS

TEST NO. 4

LOCATION - PELLET COOLER NO.51

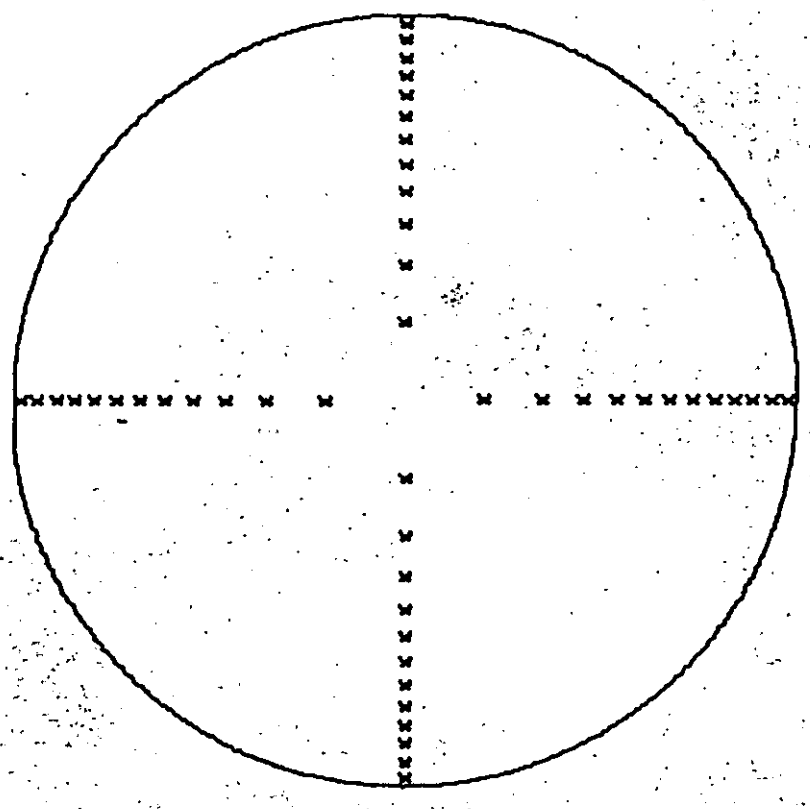

DIAMETER (IN.)	30.0
NUMBER OF PORTS	2
NUMBER OF POINTS TRAVERSED	48

APPENDIX C

FIELD DATA SHEETS

— Interpoll Inc. —

Job Peavey Co

Source Carter Cleaner #255 Date 3-15-77

Test No. 1 Run No. 1

Stack dimensions: 15" in.

Dry bulb ____ °F Wet bulb ____ °F

Rel. hum. ____ % B_{wo} 2 %

Barometric pressure (P_b) 28.24 in. Hg

Static pressure (P_g) -7.0 in. WC ____ in. Hg

Operators J. Stock L. Jennings

Pitot No. 8 C_p .838 Port Length 3"

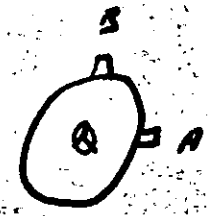

Schematic of Stack Cross Section

Traverse Point No.	Distance from Stack wall	Distance from End of Port	Velocity Head (in. WC)	Temperature (°F)
A - 1	.27	~~3 1/4~~ 4	1.15	
2	.86	~~3 7/8~~ 4	.87	
3	1.49	4 1/2	1.1	
4	2.19	5 1/8	1.2	
5	3.02	6	1.3	
6	4.04	7	1.2	
7	5.49	8 1/2	1.05	
8	9.51	12 1/2	.99	
9	10.97	14	1.00	
10	11.99	15	1.03	
11	12.81	15 7/8	1.1	
12	13.52	16 1/2	1.25	
13	14.15	17	1.3	
14	14.73	17	1.3	
B - 1			.82	
2			.80	
3			.88	
4			.82	
5			.77	
6			.74	
7			.74	
8			1.1	
9			1.2	
10			1.3	
25 11			1.3	avg. 38

28 pts 14

84 min.

S-0036R

— Interpoll Inc. —

Job Peavey Co

Source Carter Cleaner Date 3-15-77

Test No. _____ Run No. _____

Stack dimensions: _____ in.

Dry bulb _____ °F Wet bulb _____ °F

Rel. hum. _____ % B_{wo} _____ %

Barometric pressure (P_b) _____ in. Hg

Static pressure (P_g) _____ in. WC _____ in. Hg

Operators _____

Pitot No. _____ C_p _____ Port Length _____

Page 2

Schematic of Stack Cross Section

Traverse Point No.	Distance from Stack wall	Distance from End of Port	Velocity Head (in. WC)	Temperature (°F)
B-12			1.3	
13			1.15	
14			1.2	
25				avg. .38

S-0034R

Sample Log Sheet

Job Peavey Co

Unit and Sampling Location Carter Cleaner

Date 3-15-77 Test 1 Run 1

Sample Train: Leak check: < 0.02 cfm at 15 in. Hg. (vac.) ☑

Particulate Sample Type and Number	Weights		
	Final	Tare	Difference
Filter #654			.11857
Probe wash			.10678
(wet catch-Organic)			(.00194)
(wet catch-inorganic)			(.00172)
Total (M_n)			1.22535 g

Impinger ☑ Condenser ☐

Impinger Number	Weights		
	Final	Tare	Difference
1	94	100	-6
2	102	100	2
3	2	0	2
Drying Column	1283	1272	11
Total (M_{wo})			9 g

Orsat	Carbon Dioxide	Oxygen	Carbon Monoxide
1			
2			
3			
4			
5			
6			
7			
8			
Average			

form S-0048

Job Peavey Co Operators J. Stock L. Jennings Pitot No. 8 C_p .838

Source Carter cleaner Sampling Train No. 4 $\Delta H_@$ 1.89 Bar. Press. 28.24 in.Hg. B_{wo} 2 %

Date 3-15-77 Test 1 Run 1 Gasmeter coeff. .9999 Amb. Temp. 32°F Nozzle No. 4-34-1 Nozzle Dia. ~~.259~~ .181 in.

Traverse Point No.	Sampling Time (min)	Sample Volume (ft³)	Velocity Head (in. WC)	Orifice Meter (in. WC)	ΔV (mcf)	Vac. (inHg)	Stack Temp (°F) 1	Probe Temp (°F) 2	Oven Temp (°F) 3	Effluent Temp (°F) 4	Gasmeter temp IN (°F) 5	Gasmeter temp OUT (°F) 6
	(1010)	(677.74)										
A-14	3	679.58	1.05	1.30	1.84	3	38		248		34	42
13	6	681.51	1.15	1.40	1.93		38		248		36	43
12	9	683.44	1.15	1.40	1.93	3	37		248		37	43
11	12	685.33	1.10	1.35	1.89		37		248		37	42
10	15	687.17	1.05	1.30	1.84	3	37		248		37	43
9	18	688.94	.97	1.18	1.77		37		248		37	42
8	21	690.67	.92	1.10	1.73	3	37		248		37	42
7	24	692.43	.96	1.18	1.76		37		248		37	42
6	27	694.19	.96	1.18	1.76	3	37		248		37	42
5	30	695.96	.97	1.18	1.77		37		248		37	42
4	33	697.76	1.00	1.20	1.80	3	37		248		37	42
3	36	699.60	1.05	1.30	1.84		37		248		37	42
2	39	701.44	1.05	1.30	1.84	3	37		248		37	42
1	42	703.28	1.05	1.30	1.84		37		248		37	42
B-14	45	705.33	1.30	1.60	2.05	3	37		230		37	42
13	48	707.38	1.30	1.60	2.05		37		230		37	42
12	51	709.43	1.30	1.60	2.05	3	37		240		37	42
11	54	711.48	1.30	1.60	2.05		37		245		38	42
10	57	713.37	1.10	1.35	1.89	3	37		248		38	42
9	60	715.14	.97	1.18	1.77		37		248		38	43
8	63	716.91	.97	1.18	1.77	3	37		248		38	43
7	66	718.69	.92	1.10	1.73		37		248		38	43
6	69	720.29	.84	1.00	1.65	2.5	37		248		38	43
5	72	721.94	.84	1.00	1.65		37		248		39	43

t = 40
k = 40.24

Me[illegible]5 F[illegible] Da[illegible]eet

Job Perry Co Operators Page 2 Pitot No. _____ C_p _____

Source Center Cleaners Sampling Train No. _____ $\Delta H_@$ _____ Bar. Press. _____ in.Hg. B_{wo} _____ %

Date 3-15-77 Test 1 Run 1 Gasmeter coeff. _____ Amb. Temp. _____ °F Nozzle No. _____ Nozzle Dia. _____ in.

Traverse Point No.	Sampling Time (min)	Sample Volume (ft³)	Velocity Head (in.WC)	Orifice Meter (in.WC)	ΔV (mcf)	Vac. (inHg)	Stack Temp (°F) 1	Probe Temp (°F) 2	Oven Temp (°F) 3	Effluent Temp (°F) 4	Gasmeter temp IN (°F) 5	Gasmeter temp OUT (°F) 6
	(72 hr)	(72199)										
B-4	75	727.57	.82	.98	1.63	2.5	37		248		38	44
3	78	725.22	.84	1.00	1.65		37		248		38	44
2	81	726.87	.84	1.00	1.65	2.5	37		248		39	44
1	84	728.50	.82	.98	1.63		37		248		39	44
	(1156)											
	θ =	V_m = 50.76		$\Delta\bar{H}$ = 1.24							$\bar{t}_m$ =	39.96

C-5

Sample Log Sheet

Job Peavy

Unit and Sampling Location Carter Cleaner

Date 2/15/77 Test 1 Run 2

Sample Train: Leak check: < 0.02 cfm at 15 in. Hg. (vac.) ☑

Particulate Sample Type and Number	Weights		
	Final	Tare	Difference
Filter #658			.15567
Probe wash			.15307
(wet catch - organic)			(.00375)
(" " - inorganic)			(.00095)
Total (M_n)			.30829 g

Impinger ☐ Condenser ☑

Impinger Number	Weights		
	Final	Tare	Difference
1	96	100	-4
2	102	100	2
3	1	0	1
Drying Column	1290	1283	7
Total (M_{wo})			6 g

Orsat	Carbon Dioxide	Oxygen	Carbon Monoxide
1			
2			
3			
4			
5			
6			
7			
8			
Average			

form S-0046

Job Peavey Co. Operators J. Steck L. Jennings Pitot No. 8 C_p .838

Source Carter Cleaner Sampling Train No. 4 $\Delta H_@$ 1.86 Bar. Press. 28.24 in.Hg. B_{wo} 2 %

Date 3-15-77 Test 1 Run 2 Gasmeter coeff. .9999 Amb. Temp. 28°F Nozzle No. 4-1 Nozzle Dia. .181 in.

Traverse Point No.	Sampling Time (min)	Sample Volume (ft³)	Velocity Head (in.WC)	Orifice Meter (in.WC)	ΔV (mcf)	Vac. (inHg)	Stack Temp (°F) 1	Probe Temp (°F) 2	Oven Temp (°F) 3	Effluent Temp (°F) 4	Gasmeter temp IN (°F) 5	Gasmeter temp OUT (°F) 6
	(1233)	(728.20)										
B-14	3	730.25	1.30	1.60	2.05	3	39		200		38	45
13	6	732.30	1.30	1.60	2.05		39		280		39	45
12	9	734.35	1.30	1.60	2.05	3	38		230		40	45
11	12	736.40	1.30	1.60	2.05		38		230		40	45
10	15	738.45	1.20	1.60	2.05		38		230		40	45
9	18	740.42	1.20	1.43	1.97		40		242		40	45
8	21	742.31	1.10	1.31	1.89	3.1	40		248		40	45
7	24	744.20	1.10	1.31	1.84		40		249		40	45
6	27	745.83	.82	.98	1.63	3.0	40		252		40	45
5	30	747.46	.82	.98	1.63		40		256		40	45
4	33	749.20	.93	1.11	1.74		40		254		40	45
3	36	750.94	.94	1.12	1.74	2.8	40		252		40	45
2	39	752.69	.95	1.13	1.75		40		253		40	45
1	42	754.44	.95	1.13	1.75	2.9	40		250		40	45
A-14	45	756.33	1.10	1.31	1.89	2.9	41		232		40	48
13	48	758.22	1.10	1.31	1.89		41		240		40	47
12	51	760.11	1.10	1.31	1.89	3.0	41		243		40	46
11	54	761.91	1.0	1.19	1.80		41		249		40	45
10	57	763.66	.95	1.13	1.75		41		251		41	46
9	60	765.40	.93	1.11	1.74	2.8	41		251		41	46
8	63	767.06	.85	1.01	1.66		41		251		41	46
7	66	768.77	.90	1.07	1.71		41		253		41	46
6	69	770.48	.90	1.07	1.71		41		258		41	46
5	72	772.37	.95	1.13	1.89		42		256		41	46

1.19
C-7

PA ... od ... ld ... Sh...

Job Peavey Co Operators Page 2 Pitot No. ____ C_p ____

Source Carter Cleaner Sampling Train No. ____ $\Delta H_@$ ____ Bar. Press. ____ in.Hg. B_{wo} ____ %

Date 3-15-77 Test 1 Run 2 Gasmeter coeff. ____ Amb. Temp. ____ °F Nozzle No. ____ Nozzle Dia. ____ in.

Traverse Point No.	Sampling Time (min)	Sample Volume (ft^3)	Velocity Head (in. WC)	Orifice Meter (in. WC)	ΔV (mcf)	Vac. (inHg)	Stack Temp (°F) 1	Probe Temp (°F) 2	Oven Temp (°F) 3	Effluent Temp (°F) 4	Gasmeter temp IN (°F) 5	Gasmeter temp OUT (°F) 6
A-4	75	774.00	.82	.98	2.5	1.63	42		253		41	46
3	78	775.80	1.00	1.19		1.80	42		251		41	46
2	81	777.60	1.00	1.19	2.5	1.80	42		250		41	46
1	84	779.40	1.00	1.19		1.80	42		251		41	46
	(1416)											
	θ=84	V_m=51.20		$\Delta\bar{H}$=1.23							$\bar{t}_m$=	42.9

C-8

S-0037R

Sample Log Sheet

Job Peavey Co

Unit and Sampling Location Carter Cleaner

Date 3-15-77 Test 1 Run 3

Sample Train: Leak check: < 0.02 cfm at 15 in. Hg. (vac.) ☑

Particulate Sample Type and Number	Weights		
	Final	Tare	Difference
Filter # 659			.17220
Probe Wash			.17028
(wet catch-organic)			(.00391)
(" "-inorganic)			(.00107)
Total (M_n)			.34298 g

Impinger ☑ Condenser ☐

Impinger Number	Weights		
	Final	Tare	Difference
1	96	100	-4
2	103	100	3
3	1	0	1
Drying Column	1301	1290	11
Total (M_{wo})			11 g

Orsat	Carbon Dioxide	Oxygen	Carbon Monoxide
1			
2			
3			
4			
5			
6			
7			
8			
Average			

form S-0048

Job Peavy Operators L. Jennings + J. Stock Pitot No. 8 C_p .838

Source Carter Cyclone Sampling Train No. 4 $\Delta H_@$ 1.89 Bar. Press. 28.24 in.Hg. B_{wo} 2 %

Date 3/15/77 Test 1 Run 3 Gasmeter coeff. .9999 Amb. Temp. 40 °F Nozzle No. 4-2 Nozzle Dia. .141 in.

Traverse Point No.	Sampling Time (min)	Sample Volume (ft³)	Velocity Head (in.WC)	Orifice Meter (in.WC)	ΔV (mcf)	Vac. (inHg)	Stack Temp (°F) 1	Probe Temp (°F) 2	Oven Temp (°F) 3	Effluent Temp (°F) 4	Gasmeter temp IN (°F) 5	Gasmeter temp OUT (°F) 6
	(1455)	(779.02)										
A-14	3	780.94	1.10	1.31	2.9	1.88	42		240		40	46
13	6	782.82	1.10	1.31		1.88	42		243		41	46
12	9	784.70	1.10	1.31		1.88	42		249		41	46
11	12	786.58	1.10	1.31		1.88	42		251		41	46
10	15	788.39	1.00	1.19	2.9	1.81	42		253		42	47
9	18	790.14	.93	1.11		1.75	42		251		42	48
8	21	791.83	.87	1.04		1.69	43		256		42	48
7	24	793.52	.87	1.04	2.7	1.69	43		251		42	48
6	27	795.25	.91	1.08		1.73	43		250		42	48
5	30	797.03	.96	1.14		1.78	43		252		42	48
4	33	798.70	.85	1.01		1.67	43		248		42	48
3	36	800.43	.91	1.08	2.8	1.73	43		250		42	48
2	39	802.12	.87	1.04		1.69	43		252		42	48
1	42	803.85	.91	1.08		1.73	43		255		42	48
B-14	45	805.99	1.40	1.67	3.2	2.14	43		231		42	48
13	48	808.05	1.29	1.54		2.06	43		239		42	48
12	51	810.11	1.29	1.54		2.06	43		244		42	48
11	54	812.09	1.20	1.43		1.98	43		251		42	48
10	57	813.97	1.10	1.31		1.88	43		253		42	47
9	60	815.85	1.10	1.31	2.9	1.88	43		256		42	47
8	63	817.50	.83	.99		1.65	43		252		42	47
7	66	819.07	.75	.89		1.57	43		250		41	47
6	69	820.67	.78	.93		1.60	43		249		41	47
5	72	822.16	.68	.81	2.7	1.49	43		251		41	47

Job Peavy - continued Operators LS + bud Pitot No. _____ C_p _____

Source _____ Sampling Train No. 4 $\Delta H_@$ _____ Bar. Press. _____ in.Hg. B_{wo} _____ %

Date 3/15/77 Test 1 Run 3 Gasmeter coeff. _____ Amb. Temp. _____ °F Nozzle No. _____ Nozzle Dia. _____ in.

Traverse Point No.	Sampling Time (min)	Sample Volume (ft³)	Velocity Head (in. WC)	Orifice Meter (in. WC)	ΔV (mcf)	Vac. (inHg)	Stack Temp (°F) 1	Probe Temp (°F) 2	Oven Temp (°F) 3	Effluent Temp (°F) 4	Gasmeter temp IN (°F) 5	Gasmeter temp OUT (°F) 6
	( )	(822.16)										
B-4	75	~~823.10~~ 823.70	~~.80~~ .72	.86	1.54		43		250		41	47
3	78	825.20	.72	.86	1.54	2.4	43		253		41	47
2	81	826.78	.76	.90	1.58		43		252		41	47
1	84	828.36	.76	.90	1.58		43		252		41	48
	(1635)											
		V_m = 49.30		$\bar{\Delta H}$ = 1.14							$\bar{t}_m$ =	44.5

Preliminary Data — Method 2

— Interpoll Inc. —

Job Peavey Co

Source Crippen Cleaner Date 3-16-77

Test No. 2 Run No. 1

Stack dimensions: 19" in.

Dry bulb ____ °F Wet bulb ____ °F

Rel. hum. ____ % B_{wo} 2 %

Barometric pressure (P_b) 28.46 in. Hg

Static pressure (P_g) -7.0 in. WC ____ in. Hg

Operators J. Stack

Pitot No. 8 C_p .838 Port Length 3"

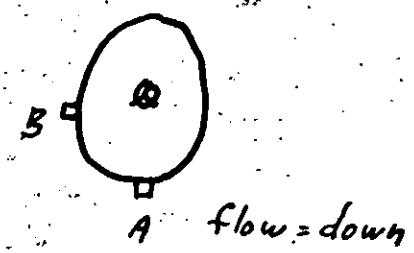

Schematic of Stack Cross Section

Traverse Point No.	Distance from Stack wall	Distance from End of Port	Velocity Head (in. WC)	Temperature (°F)
A-1	.475	4	.85	
2	1.56	4 1/2	1.00	
3	2.69	5 5/8	1.3	
4	4.29	7 1/4	.97	
5	6.50	9 1/2	.87	
6	12.50	15 1/2	.84	
7	14.71	17 3/4	.85	
8	16.32	19 3/8	.90	
9	17.44	20 1/2	.94	
10	18.53	21	.90	
B-1			.60	
2			.63	
3			.77	
4			.67	
5			.78	
6			.82	
7			.89	
8			1.00	
9			1.02	
10			.91	
25				avg. 32

S-0034R

Sample Log Sheet

Job Peavey Co

Unit and Sampling Location Crippen cleaner

Date 3-16-77 Test 2 Run 1

Sample Train: Leak check: < 0.02 cfm at 15 in. Hg. (vac.) ☑

Particulate Sample Type and Number	Weights		
	Final	Tare	Difference
Filter # 660			.03677
Probe Wash			.04151
(wet catch-organic)			(.00663)
(" " -inorganic)			(.00146)
Total (M_n)			.07828 g

Impinger ☑ Condenser ☐

Impinger Number	Weights		
	Final	Tare	Difference
1	96	100	-4
2	102	100	2
3	1	0	1
Dpingcolumn	1306	1301	5
Total (M_{wo})			4 g

Orsat	Carbon Dioxide	Oxygen	Carbon Monoxide
1			
2			
3			
4			
5			
6			
7			
8			
Average			

form S-0046

Job Peavey Co. Operators J. Stock L. Jennings Pitot No. 8 C_p .838

Source Crippen Cleaner Sampling Train No. 4 $\Delta H_@$ 1.89 Bar. Press. 28.46 in.Hg. B_{wo} 2 %

Date 3-16-77 Test 2 Run 1 Gasmeter coeff. .9999 Amb. Temp. 32°F Nozzle No. 4-1 Nozzle Dia. .181 in.

Traverse Point No.	Sampling Time (min)	Sample Volume (ft³)	Velocity Head (in.WC)	Orifice Meter (in.WC)	ΔV (mcf)	Vac. (inHg)	Stack Temp (°F) 1	Probe Temp (°F) 2	Oven Temp (°F) 3	Effluent Temp (°F) 4	Gasmeter temp IN (°F) 5	Gasmeter temp OUT (°F) 6
	(0905)	(827.88)										
B-10	3	829.73	1.10	1.38	1.85	3	30		250		34	38
9	6	831.58	1.10	1.38	1.85		32		250		34	40
8	9	833.43	1.10	1.38	1.85	3	32		250		38	42
7	12	835.18	.99	1.25	1.75		32		250		38	42
6	15	836.85	.90	1.10	1.67	2.7	32		250		40	42
5	18	838.42	.79	.98	1.57		32		250		40	42
4	21	839.88	.68	.84	1.46	2	32		250		40	42
3	24	841.34	.68	.84	1.46		33		250		40	42
2	27	842.80	.68	.84	1.46	2	34		250		40	42
1	30	844.31	.70	.86	1.48		34		250		40	42
A-10	33	846.05	.97	1.20	1.74	3	34		250		40	42
9	36	847.79	.97	1.20	1.74		34		250		40	42
8	39	849.52	.95	1.18	1.73	3	34		250		40	42
7	42	851.19	.90	1.10	1.67		34		250		40	42
6	45	852.83	.85	1.02	1.64	3	34		250		40	42
5	48	854.47	.85	1.02	1.64		34		250		40	42
4	51	856.15	.90	1.10	1.68	3	34		250		40	42
3	54	857.74	.80	.97	1.59		34		250		40	42
2	57	859.35	.82	1.00	1.61	3	34		250		40	42
1	60	860.99	.85	1.02	1.64		34		250		40	42
	(1007)											
	θ=60	v_m=33.11		$\Delta\bar{H}$=1.08							t_m=	40.5

Sample Log Sheet

Job Pearey Co

Unit and Sampling Location: Crippen Cleaner

Date 3-16-77 Test 2 Run 2

Sample Train: Leak check: < 0.02 cfm at 15 in. Hg. (vac.) ☑

Particulate Sample Type and Number	Weights		
	Final	Tare	Difference
Filter # 641			.02564
Probe wash			.03790
(wet catch-organic)			(.00351)
(" " -inorganic)			(.00207)
Total (M_n)			.06354 g

Impinger ☑ Condenser ☐

Impinger Number	Weights		
	Final	Tare	Difference
1	94	100	-6
2	103	100	3
3	3	0	3
Drying Column	1312	1306	6
Total (M_{wo})			6 g

Orsat	Carbon Dioxide	Oxygen	Carbon Monoxide
1			
2			
3			
4			
5			
6			
7			
8			
Average			

form S-0046

Job Peavey Co Operators J. Sreek L. Jennings Pitot No. 8 C_p .838

Source Crippen Cleaner Sampling Train No. 4 $\Delta H_@$ 1.89 Bar. Press. 28.46 in.Hg. B_{wo} 2 %

Date 3-16-77 Test 2 Run 2 Gasmeter coeff. .9990 Amb. Temp. 33°F Nozzle No. 4-1 Nozzle Dia. .181 in.

Traverse Point No.	Sampling Time (min)	Sample Volume (ft³)	Velocity Head (in. WC)	Orifice Meter (in. WC)	ΔV (mcf)	Vac. (inHg)	Stack Temp (°F) 1	Probe Temp (°F) 2	Oven Temp (°F) 3	Effluent Temp (°F) 4	Gasmeter temp IN (°F) 5	Gasmeter temp OUT (°F) 6
	(1037)	(861.20)										
A-10	3	862.94	.97	1.20	1.74	3	36		250		40	47
9	6	864.68	.97	1.20	1.74		36		250		41	48
8	9	866.38	.93	1.15	1.70	3	36		250		42	48
7	12	868.02	.87	1.08	1.64		36		250		43	48
6	15	869.69	.84	1.02	1.67	3	36		250		45	48
5	18	871.37	.85	1.05	1.68		36		250		45	48
4	21	873.06	.81	1.00	1.63	3	36		250		45	48
3	24	874.68	.85	1.05	1.68		36		250		45	48
2	27	876.36	.85	1.05	1.68	3	36		250		45	48
1	30	878.01	.82	1.01	1.65		36		250		46	50
B-10	33	879.92	1.10	1.40	1.91	3	36		250		46	50
9	36	881.83	1.10	1.40	1.91		36		250		46	50
8	39	883.74	1.10	1.40	1.91	3	36		250		47	50
7	42	885.63	.95	1.18	1.79		36		250		48	52
6	45	887.27	.90	1.12	1.74	3	36		250		49	52
5	48	888.86	.75	.95	1.59		36		250		50	53
4	51	890.41	.71	.90	1.55	2.5	36		250		50	53
3	54	891.83	.64	.80	1.42		36		250		50	53
2	57	893.36	.69	.86	1.53	2.5	36		250		50	53
1	60	894.6	.69	.86	1.53		36		250		50	53
	(1140)											
	θ=60	V_m=33.69		$\Delta\bar{H}$=1.08							$\bar{t}_m$ =	48.05

reduced Process rate

r=45
K=40.51
41.91
1=90

C-16

S-0037R

Sample Log Sheet

Job Peavey Co

Unit and Sampling Location Crippen Cleaner

Date 3-16-77 Test 2 Run 3

Sample Train: Leak check: < 0.02 cfm at 15 in. Hg. (vac.) ☑

Particulate Sample Type and Number	Weights		
	Final	Tare	Difference
Filter #6~~0~~2			.03292
Probe + cyclone wash			.04240
(wet catch - organic)			(.00293)
(" " - inorganic)			(.00182)
Total (M_n)			.07532 g

Impinger ☑ Condenser ☐

Impinger Number	Weights		
	Final	Tare	Difference
1	94	100	-6
2	104	100	4
3	2	0	2
Drying Column	1319	1312	7
Total (M_{wo})			7 g

Orsat	Carbon Dioxide	Oxygen	Carbon Monoxide
1			
2			
3			
4			
5			
6			
7			
8			
Average			

form S-0046

PA od ld Sh

Job Peavey Co Operators JS + LJ Pitot No. 8 C_p .838

Source Crippen Cleaner Sampling Train No. 4 $\Delta H_@$ 1.89 Bar. Press. 28.46 in.Hg. B_{wo} 1 %

Date 3/16/77 Test 2 Run 3 Gasmeter coeff. .9999 Amb. Temp. 34 °F Nozzle No. 4-1 Nozzle Dia. .181 in.

Traverse Point No.	Sampling Time (min)	Sample Volume (ft³)	Velocity Head (in. WC)	Orifice Meter (in. WC)	ΔV (mcf)	Vac. (inHg)	Stack Temp (°F) 1	Probe Temp (°F) 2	Oven Temp (°F) 3	Effluent Temp (°F) 4	Gasmeter temp IN (°F) 5	Gasmeter temp OUT (°F) 6
	(1205)	(895.13)										
B-10	3	897.05	1.10	1.40	1.93	3	38		250		52	56
9	6	898.97	1.10	1.40	1.92	3	38		250		52	56
8	9	900.89	1.10	1.40	1.92	3	38		250		52	56
7	12	902.69	.96	1.19	1.80	2.9	38		250		52	56
6	15	904.41	.88	1.09	1.72		38		250		52	56
5	18	905.95	.71	.86	1.54	2.4	38		250		52	56
4	21	907.53	.74	.91	1.58		38		250		52	56
3	24	909.07	.71	.86	1.54		38		250		58	59
2	27	910.63	.70	.85	1.56	2.3	38		250		59	60
1	30	912.17	.68	.83	1.54		38		250		59	60
A-10	33	914.00	.96	1.19	1.83		38		250		60	60
9	36	915.83	.96	1.19	1.83	2.9	38		250		60	60
8	39	917.66	.96	1.19	1.83		38		250		60	60
7	42	919.45	.92	1.14	1.79		38		250		60	60
6	45	921.20	.88	1.09	1.75		38		250		60	60
5	48	922.90	.83	1.03	1.70	2.8	39		250		60	60
4	51	924.62	.85	1.05	1.72		40		250		60	60
3	54	926.34	.85	1.05	1.72		40		250		60	60
2	57	928.07	.86	1.06	1.73		40		250		60	60
1	60	929.77	.83	1.03	1.70		40		250		60	60
	(1308)											
		V_m=34.64		$\sqrt{\Delta H}$=1.09							$\bar{t}_m$=57.78	

C-18

S-0037R

— Interpoll Inc. —

Job Peavey Co.

Source Crippen Cleaner Date March 17, 1977

Test No. 3 Run No. 1

Stack dimensions: 15' in.

Dry bulb ____ °F Wet bulb ____ °F

Rel. hum. ____ % B_{wo} ____ %

Barometric pressure (P_b) 28.06 in. Hg

Static pressure (P_g) -7.2 in. WC ____ in. Hg

Operators J. Stock L. Jennings

Pitot No. 8 C_p .838 Port Length 3"

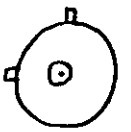

Schematic of Stack Cross Section

Traverse Point No.	Distance from Stack wall	Distance from End of Port	Velocity Head (in. WC)	Temperature (°F)
A-1	.375	4	2.50	
2	1.23	4 1/4	1.60	
3	2.19	5 1/4	1.87	
4	3.39	6 3/8	1.77	
5	5.13	8 1/8	1.80	
6	9.87	12 7/8	1.63	
7	11.61	14 5/8	1.65	
8	12.81	15 7/8	1.85	
9	13.77	16 3/4	1.80	
10	14	17	1.70	
B-1			2.00	
2			1.77	
3			1.89	
4			1.85	
5			1.85	
6			1.80	
7			1.75	
8			1.72	
9			1.70	
10			1.65	
25				avg. 38

S-0034R

Sample Log Sheet

Job Peavey Co

Unit and Sampling Location Crippen Cleaner

Date 3-17-77 Test 3 Run 1

Sample Train: Leak check: < 0.02 cfm at 15 in. Hg. (vac.) ☑

Particulate Sample Type and Number	Weights		
	Final	Tare	Difference
Filter # 657			.00921
Probe + Cyclone wash			.01873
(wet catch - organic)			(.00380)
(" " - inorganic)			(.00161)
Total (M_n)			.02794 g

Impinger ☑ Condenser ☐

Impinger Number	Weights		
	Final	Tare	Difference
1	83	100	-17
2	103	100	3
3	2	0	2
Drying Column	1163	1147	17
Total (M_{wo})			5 g

Orsat	Carbon Dioxide	Oxygen	Carbon Monoxide
1			
2			
3			
4			
5			
6			
7			
8			
Average			

form S-004

Job Peavey Co Operators J. Stock L. Jennings Pitot No. 8 C_p .838

Source Frippen Cleaner Sampling Train No. 4 $\Delta H_@$ 1.89 Bar. Press. 28.66 in.Hg. B_{wo} 1 %

Date 3-17-77 Test 3 Run 1 Gasmeter coeff. .9999 Amb. Temp. 38°F Nozzle No. 4-1 Nozzle Dia. .181 in.

Traverse Point No.	Sampling Time (min)	Sample Volume (ft³)	Velocity Head (in. WC)	Orifice Meter (in. WC)	ΔV (mcf)	Vac. (inHg)	Stack Temp (°F) 1	Probe Temp (°F) 2	Oven Temp (°F) 3	Effluent Temp (°F) 4	Gasmeter temp IN (°F) 5	Gasmeter temp OUT (°F) 6
	(927)	(930.00)										
A-10	3	932.52	1.95	2.40	2.52	5	38		250		38	38
9	6	935.04	1.95	2.40	2.52		38		250		38	39
8	9	937.53	1.90	2.33	2.49	5	38		250		39	40
7	12	939.89	1.70	2.10	2.36		38		250		40	40
6	15	942.21	1.65	2.03	2.32	4.3	38		250		40	40
5	18	944.60	1.75	2.15	2.39		38		250		40	41
4	21	946.99	1.75	2.15	2.39	5	38		250		40	41
3	24	949.42	1.80	2.21	2.43		38		250		40	41
2	27	952.31	2.55	3.14	2.89	6	38		250		40	41
1	30	954.69	1.70	2.10	2.36		38		250		40	41
B-10	33	957.18	1.92	2.36	2.51	5	38		250		40	41
9	36	959.69	1.92	2.36	2.51		38		250		40	41
8	39	962.18	1.90	2.33	2.49	5	38		250		40	41
7	42	964.55	1.72	2.12	2.37		38		250		40	41
6	45	966.84	1.60	1.97	2.29	4	38		250		40	41
5	48	969.23	1.75	2.15	2.39		38		250		40	41
4	51	971.62	1.75	2.15	2.39	4.5	38		250		40	41
3	54	973.98	1.70	2.10	2.36		38		250		40	41
2	57	976.26	1.62	1.99	2.30	4	37		250		40	41
1	60	978.57	1.68	1.96	2.29		37		250		40	41
	(1038)											
		V_m = 48.57		$\overline{\Delta H}$ = 2.22							$\overline{t}_m$ = 40.2	

t = 40
x = 40.43
J = 1.23

Sample Log Sheet

Job Peavey Co

Unit and Sampling Location Crippen Cleaner Cyclone Outlet

Date 3-17-77 Test 3 Run 2

Sample Train: Leak check: < 0.02 cfm at 15 in. Hg. (vac.) ☑

Particulate Sample Type and Number	Weights		
	Final	Tare	Difference
Filter #663			.01231
Probe Wash			.01711
(wet catch - organic)			(.00258)
(" " - inorganic)			(.00048)
Total (M_n)			.02942 g

Impinger ☑ Condenser ☐

Impinger Number	Weights		
	Final	Tare	Difference
1	82	100	-18
2	105	100	5
3	9	0	0
Drying column	1179	1163	16
Total (M_{wo})			3 g

Orsat	Carbon Dioxide	Oxygen	Carbon Monoxide
1			
2			
3			
4			
5			
6			
7			
8			
Average			

form S-0046

Job: Peavey Co Operators: J. Stock L. Jennings Pitot No. 8 C_p .838

Source: Crapper Cleaner Sampling Train No. 4 $\Delta H_@$ 1.89 Bar. Press. 28.06 in.Hg. B_{wo} ___ %

Date 3-17-77 Test 3 Run 2 Gasmeter coeff. .9999 Amb. Temp. 35°F Nozzle No. 4-1 Nozzle Dia. .181 in.

Traverse Point No.	Sampling Time (min)	Sample Volume (ft³)	Velocity Head (in. WC)	Orifice Meter (in. WC)	ΔV (mcf)	Vac. (inHg)	Stack Temp (°F) 1	Probe Temp (°F) 2	Oven Temp (°F) 3	Effluent Temp (°F) 4	Gasmeter temp IN (°F) 5	Gasmeter temp OUT (°F) 6
	(1100)	(979.71)										
B-10	3	981.23	1.45	2.40	2.52	5	37		250		35	40
9	6	983.75	1.45	2.40	2.52		39		250		40	40
8	9	986.27	1.95	2.40	2.52	5	39		250		40	42
7	12	988.66	1.75	2.15	2.39		39		250		40	42
6	15	990.89	1.65	2.03	2.23	5	39		250		40	42
5	18	993.32	1.80	2.21	2.45		39		250		40	42
4	21	995.38	1.30	1.55	2.06	4	39		250		40	42
3	24	997.40	1.55	1.87	2.10		39		250		40	42
2	27	999.73	1.55	1.91	2.25	4	39		250		40	42
1	30	1.98	1.55	1.91	2.25		39		250		40	42
A-10	33	4.68	2.23	2.74	2.70	6	39		250		38	40
9	36	7.38	2.33	2.74	2.70		39		250		38	40
8	39	10.13	2.35	2.85	2.75	6	39		250		38	41
7	42	12.81	2.10	2.58	2.68		39		250		38	41
6	45	15.38	1.95	2.40	2.52	5	39		250		39	42
5	48	17.85	1.95	2.40	2.52		39		250		39	42
4	51	19.83	1.20	1.48	1.95	4	38		250		38	41
3	54	21.82	1.32	1.63	2.09		38		[illegible]		[illegible]	41
2	57	23.91	1.20	1.48	1.95	4	38		250		38	41
1	60	25.68	1.20	1.48	1.95		38		250		[illegible]	41
	(1270)											
		V_m=47.17		$\overline{\Delta H}$=2.12							T_m	40.1

(*PAGE DAMAGED BY WEATHER
SEE NEXT PAGE
FOR LEGIBLE COPY)

PA nod eld Sh

Job Peavey Co. Operators J. Stack L. Jennings Pitot No. 8 C_p .838

Source Crippen Cleaner Sampling Train No. 4 $\Delta H_@$ 1.89 Bar. Press. 28.06 in.Hg. B_{wo} ____ %

Date 3-14-77 Test 3 Run 2 Gasmeter coeff. .9999 Amb. Temp. 35°F Nozzle No. 4-1 Nozzle Dia. .181 in.

Traverse Point No.	Sampling Time (min)	Sample Volume (ft³)	Velocity Head (in. WC)	Orifice Meter (in. WC)	ΔV (mcf)	Vac. (inHg)	Stack Temp (°F) 1	Probe Temp (°F) 2	Oven Temp (°F) 3	Effluent Temp (°F) 4	Gasmeter temp IN (°F) 5	Gasmeter temp OUT (°F) 6
	(1100)	(978.71)										
B-10	3	981.23	1.95	2.40		5	37		250		35	40
9	6	983.75	1.95	2.40			39				40	40
8	9	986.27	1.95	2.40		5	39				40	42
7	12	988.66	1.75	2.15			39				40	42
6	15	990.89	1.65	2.03		5	39		250		40	42
5	18	993.32	1.80	2.21			39				40	42
4	21	995.38	1.30	1.55		4	39				40	42
3	24	997.46	1.35	1.82			39				40	42
2	27	999.73	1.55	1.91		4	39		250		40	42
1	30	1.98	1.55	1.91			39				40	42
A-10	33	4.68	2.23	2.74		6	39				38	40
9	36	7.38	2.23	2.74			39		250		38	40
8	39	10.13	2.32	2.85		6	39				38	41
7	42	12.81	2.10	2.58			39				38	41
6	45	15.33	1.95	2.40		5	39		250		38	42
5	48	17.85	1.95	2.40			39				39	42
4	51	19.83	1.20	1.48		4	38				38	41
3	54	21.92	1.32	1.62			38		250		38	41
2	57	23.90	1.20	1.48		4	38				38	41
1	60	25.88	1.20	1.48			38		250		38	41
	(1229)											
		*	copied	from	rain-damaged		original	on	previous	page		
	θ=60	V_m=47.17		$\overline{\Delta H}$=2.12							T_m=	40.1

Sample Log Sheet

Job: Peavey Co

Unit and Sampling Location: Crippen Cleaner Cyclone Outlet

Date: 3-17-77 Test: 13 Run: 3

Sample Train: Leak check: < 0.02 cfm at 15 in. Hg. (vac.) ☑

Particulate Sample Type and Number	Weights		
	Final	Tare	Difference
Filter # 664			.02336
Probe + cyclone wash			.02374
(wet catch - organic)			(.00364)
(" " - inorganic)			(.00064)
Total (M_n)			.04610 g

Impinger ☑ Condenser ☐

Impinger Number	Weights		
	Final	Tare	Difference
1	82	100	-18
2	103	100	3
3	4	0	4
Drying Column	1196	1179	17
Total (M_{wo})			6 g

Orsat	Carbon Dioxide	Oxygen	Carbon Monoxide
1			
2			
3			
4			
5			
6			
7			
8			
Average			

Form S-0048

Job: Peavey Co Operators: J. Stock / L. Jennings Pitot No. 8 C_p .850

Source: Cupola Cleaner Sampling Train No. 4 $\Delta H_@$ 1.89 Bar. Press. 29.05 in.Hg. B_{wo} ___ %

Date 3-17-77 Test 3 Run 3 Gasmeter coeff. .9999 Amb. Temp. ___ °F Nozzle No. 4-1 Nozzle Dia. .181 in.

Traverse Point No.	Sampling Time (min)	Sample Volume (ft³)	Velocity Head (in. WC)	Orifice Meter (in. WC)	ΔV (mcf)	Vac. (inHg)	Stack Temp (°F) 1	Probe Temp (°F) 2	Oven Temp (°F) 3	Effluent Temp (°F) 4	Gasmeter temp IN (°F) 5	Gasmeter temp OUT (°F) 6
	(1318)	(25.40)										
A-10	3	28.04	2.05	2.53	2.59	5	38		250		36	39
9	6	30.63	2.05	2.53	2.59		38		250		38	40
8	9	33.28	2.15	2.64	2.65	5	38		250		39	40
7	12	35.87	2.05	2.53	2.55		38		250		39	40
6	15	38.39	1.95	2.40	2.52	5	39		250		39	40
5	18	40.51	1.37	1.69	2.12		39		250		40	40
4	21	42.51	1.22	1.50	2.00	4	39		250		41	41
3	24	44.32	1.00	1.23	1.81		39		250		41	41
2	27	46.32	1.22	1.50	2.0	4	39		250		40	41
1	30	48.37	1.22	1.50	2.10		39		250		40	41
B-10	33	50.72	1.82	2.24	2.44	5	39		250		38	42
9	36	53.17	1.77	2.18	2.41		39		250		40	42
8	39	55.58	1.77	2.18	2.41	5	39		250		40	42
7	42	57.90	1.70	2.08	2.36		39		250		40	42
6	45	60.19	1.55	1.90	2.25	5	39		250		40	42
5	48	62.51	1.65	2.03	2.32		39		250		42	42
4	51	64.90	1.75	2.16	2.39	5	39		250		44	42
3	54	67.20	1.50	1.85	2.21		39		250		44	44
2	57	69.32	1.50	1.85	2.21	5	40		250		44	44
1	60	71.57	1.55	1.91	2.25		40		250		44	44
	(1431)											
		V_m=46.17		$\overline{\Delta H}$=2.02							$\overline{t_m}$=	41.0

Interpolation

C-29

S-001ZR

Preliminary Data — Method 5

— Interpoll Inc. —

Job Peavey Co

Source Pellet Cooler Date 3-18-77

Test No. 4 Run No. 1

Stack dimensions: 30" in.

Dry bulb ____ °F Wet bulb ____ °F

Rel. hum. ____ % B_{wo} 1 %

Barometric pressure (P_b) 28.08 in. Hg

Static pressure (P_g) -2.0 in. WC ____ in. Hg

Operators J. Stock L. Jennings

Pitot No. 8 C_p .838 Port Length 3"

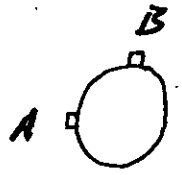

Schematic of Stack Cross Section

Traverse Point No.	Distance from Stack wall	Distance from End of Port	Velocity Head (in. WC)	Temperature (°F)
A-1	.33	4	.82	
2	.96	4	.82	
3	1.65	4 5/8	.94	
4	2.37	5 3/8	1.10	
5	3.15	6 1/8	.84	
6	3.96	7	.67	
7	4.83	7 7/8	.77	
8	5.82	8 7/8	.84	
9	6.9	9 7/8	.90	
10	8.16	11 1/8	.97	
11	9.69	12 3/4	1.05	
12	11.94	15	1.10	
13	18.06	21	1.10	
14	20.31	23 3/8	1.20	
15	21.84	24 7/8	1.10	
16	23.1	26 1/8	1.13	
17	24.18	27 1/8	1.15	
18	25.17	28 1/8	1.18	
19	26.04	29	1.20	
20	26.85	29 7/8	1.20	
21	27.63	30 5/8	1.23	
22	28.35	31 3/8	1.25	
23	29.04	32	1.25	
24	29.67	32	1.25	
25				avg. 58

S-0034R

— Interpoll Inc. —

Job Peavey Co.

Source _____ Date March 18 1977

Test No. 4 Run No. 1

Stack dimensions: _____ in.

Dry bulb _____ °F Wet bulb _____ °F

Rel. hum. _____ % B_{wo} _____ %

Barometric pressure (P_b) _____ in. Hg

Static pressure (P_g) _____ in. WC _____ in. Hg

Operators J. Stock L. Jennings

Pitot No. 8 C_p .838 Port Length 3"

Page 2

Schematic of Stack Cross Section

Traverse Point No.	Distance from Stack wall	Distance from End of Port	Velocity Head (in. WC)	Temperature (°F)
B - 1			.82	
2			.68	
3			.71	
4			.91	
5			1.01	
6			1.11	
7			1.20	
8			1.30	
9			1.25	
10			1.20	
11			1.15	
12			1.10	
13			1.00	
14			1.05	
15			1.00	
16			.97	
17			.97	
18			.90	
19			.94	
20			1.00	
21			1.11	
22			1.00	
23			1.00	
24			.92	
25				avg. 58

S-0034R

Sample Log Sheet

Job Peavey Co

Unit and Sampling Location Pellet Cooler

Date 3-18-77 Test 4 Run 1

Sample Train: Leak check: < 0.02 cfm at 15 in. Hg. (vac.) ☑

Particulate Sample Type and Number	Weights		
	Final	Tare	Difference
Filter # 665			.01178
Probe Wash			.08515
(wet catch-organic)			(.00207)
(" "-inorganic)			(.00095)
Total (M_n)			.09693 g

Impinger ☑ Condenser ☐

Impinger Number	Weights		
	Final	Tare	Difference
1	92	100	-8
2	98	100	-2
3	2	0	2
Drying Column	1209	1196	13
Total (M_{wo})			5 g

Orsat	Carbon Dioxide	Oxygen	Carbon Monoxide
1			
2			
3			
4			
5			
6			
7			
8			
Average			

form S-0045

Job Peavey Co Operators J. Stock L. Jennings Pitot No. 8 C_p .838

Source Pellet Cooler Sampling Train No. 4 $\Delta H_@$ 1.89 Bar. Press. 29.08 in.Hg. B_{wo} 1 %

Date 3-18-77 Test 4 Run 1 Gasmeter coeff. .9999 Amb. Temp. °F Nozzle No. 4-1 Nozzle Dia. .181 in.

Traverse Point No.	Sampling Time (min)	Sample Volume (ft³)	Velocity Head (in. WC)	Orifice Meter (in. WC)	ΔV (mcf)	Vac. (inHg)	Stack Temp (°F) 1	Probe Temp (°F) 2	Oven Temp (°F) 3	Effluent Temp (°F) 4	Gasmeter temp IN (°F) 5	Gasmeter temp OUT (°F) 6
	(1037)	(72.65)										
A-1	2	74.09	1.05	1.29	1.24	3	58		250		37	39
2	4	75.29	1.00	1.23	1.20		59		250		38	40
3	6	76.53	1.05	1.29	1.24	3	58		250		40	42
4	8	77.57	.78	.96	1.09		58		250		40	42
5	10	78.64	.82	1.01	1.07	2.5	58		250		40	43
6	12	79.66	.74	.91	1.02		59		250		40	43
7	14	80.72	.80	.98	1.06	2.5	58		250		41	44
8	16	81.82	.86	1.06	1.10		58		250		41	45
9	18	82.92	.86	1.06	1.10	2.5	58		250		41	45
10	20	84.04	.89	1.09	1.12		58		250		41	44
11	22	85.17	.92	1.13	1.13	3	57		250		41	44
12	24	86.30	.92	1.13	1.13		57		250		41	44
13	26	87.48	1.00	1.23	1.18	3	57		250		41	44
14	28	88.64	.96	1.18	1.16		57		250		42	44
15	30	89.89	1.05	1.29	1.24	3	57		250		42	44
16	32	91.12	1.05	1.29	1.24		57		250		43	45
17	34	92.36	1.10	1.35	1.24	3	57		250		43	45
18	36	93.60	1.10	1.35	1.24		57		250		44	45
19	38	94.84	1.10	1.35	1.24	3	57		250		43	45
20	40	96.05	1.05	1.29	1.29		57		250		43	45
21	42	97.18	.92	1.13	1.13	3	57		250		43	45
22	44	98.47	1.20	1.48	1.29		57		250		43	45
23	46	99.62	.95	1.17	1.15	3	57		250		42	45
24	48	100.77	.95	1.17	1.15		57		250		42	45

C-30

Process rate = 4 1/4 T/HR

~~44.45~~ 26.95

Internoll-Inc S-0037R

Job Traverse Co. Operators Peg - 2 Pitot No. 5 C_p .8

Source Pellet Cooler Sampling Train No. _____ $\Delta H_@$ 1.89 Bar. Press. 28.08 in.Hg. B_{wo} 1 %

Date 3-18-77 Test 4 Run 1 Gasmeter coeff. _____ Amb. Temp. ____ °F Nozzle No. 4-1 Nozzle Dia. .181 in.

Traverse Point No.	Sampling Time (min)	Sample Volume (ft³)	Velocity Head (in. WC)	Orifice Meter (in. WC)	ΔV (mcf)	Vac. (inHg)	Stack Temp (°F) 1	Probe Temp (°F) 2	Oven Temp (°F) 3	Effluent Temp (°F) 4	Gasmeter temp IN (°F) 5	Gasmeter temp OUT (°F) 6
	(48)	(100.81)										
B-24	50	102.05	1.10	1.35	1.24	3	57		250		40	44
23	52	103.29	1.10	1.35	1.24		57		250		42	44
22	54	104.53	1.10	1.35	1.24	3	57		250		43	45
21	56	105.72	1.02	1.25	1.19		57		250		43	46
20	58	106.91	1.02	1.25	1.19	3	57		250		45	46
19	60	108.10	1.02	1.25	1.19		57		250		45	45
18	62	109.26	.95	1.17	1.16	3	57		250		46	46
17	64	110.42	.94	1.17	1.16		57		250		45	47
16	66	111.55	.90	1.10	1.13	3	57		250		45	47
15	68	112.63	.82	1.01	1.08		57		250		45	47
14	70	113.81	.97	1.19	1.18	3	57		256		48	47
13	72	114.92	.87	1.07	1.11		57		250		46	48
12	74	116.05	.90	1.10	1.13	3	57		250		46	48
11	76	117.18	.90	1.10	1.13		57		250		46	47
10	78	118.27	.84	1.03	1.09	3	57		250		46	47
9	80	119.42	.93	1.16	1.15		57		250		46	47
8	82	120.64	1.05	1.27	1.22	3	57		250		46	48
7	84	121.69	.78	.96	1.05		57		250		46	48
6	86	122.88	1.00	1.23	1.19	3	57		250		46	48
5	88	123.95	.80	1.00	1.07		57		250		46	48
4	90	125.08	.90	1.10	1.13	3	57		250		47	49
3	92	126.04	.65	.80	.96		57		250		47	49
2	94	127.02	.67	.83	.96	3	57		250		47	49
1	96	128.10	.92	1.01	1.08		57		250		47	49

(1225) V_m = 55.25 ΔH = 1.16 — Interpoll Inc — t_m = 44.3

S-0037R

C-31

Sample Log Sheet

Job Peavey Co

Unit and Sampling Location Pellet Cooler

Date 3-18-77 Test 4 Run 2

Sample Train: Leak check: < 0.02 cfm at 15 in. Hg. (vac.) ☑

Particulate Sample Type and Number	Weights		
	Final	Tare	Difference
Filter # 667			.05416
Probe wash			.14413
(wet catch - organic)			(.00188)
(" " - inorganic)			(.00118)
Total (M_n)			.19829 g

Impinger ☑ Condenser ☐

Impinger Number	Weights		
	Final	Tare	Difference
1	92	100	-8
2	103	100	3
3	3	0	3
Drying Column	1346	1333	13
Total (M_{wo})			11 g

Orsat	Carbon Dioxide	Oxygen	Carbon Monoxide
1			
2			
3			
4			
5			
6			
7			
8			
Average			

form S-0046

Job Peavey CO Operators J. Stack L. Jennings Pitot No. 8 C_p .858

Source Pellet Cooler Sampling Train No. 4 $\Delta H_@$ 1.89 Bar. Press. 28.08 in.Hg. B_{wo} 1 %

Date 3-18-77 Test 4 Run 2 Gasmeter coeff. .9999 Amb. Temp. °F Nozzle No. 4-1 Nozzle Dia. .181 in.

Traverse Point No.	Sampling Time (min)	Sample Volume (ft³)	Velocity Head (in. WC)	Orifice Meter (in. WC)	ΔV (mcf)	Vac. (inHg)	Stack Temp (°F) 1	Probe Temp (°F) 2	Oven Temp (°F) 3	Effluent Temp (°F) 4	Gasmeter temp IN (°F) 5	Gasmeter temp OUT (°F) 6
	(1306)	(128.93)										
A-24	2	129.68	1.10	1.35	1.25	3	60		250		44	52
23	4	130.90	1.05	1.29	1.22		60		250		52	56
22	6	132.12	1.05	1.29	1.22	3	60		250		55	55
21	8	133.34	1.05	1.25	1.22		60		250		55	53
20	10	134.56	1.00	1.23	1.22	3	60		256		55	56
19	12	135.84	1.10	1.35	1.28		60		250		55	56
18	14	137.12	1.10	1.35	1.28	3	60		250		55	56
17	16	138.37	1.05	1.29	1.25		60		250		55	56
16	18	139.51	.87	1.07	1.14	3	60		250		56	56
15	20	140.61	.82	1.08	1.10		60		250		56	56
14	22	141.75	.87	1.07	1.14	3	60		250		57	57
13	24	143.03	1.10	1.35	1.28		60		250		57	57
12	26	144.15	.85	1.05	1.12	3	60		250		57	57
11	28	145.34	.95	1.17	1.19		60		250		56	58
10	30	146.42	.78	.96	1.08	3	60		250		55	58
9	32	147.59	.92	1.13	1.17		60		250		55	57
8	34	148.60	.82	1.01	1.10	3	60		250		55	57
7	36	149.74	.90	1.11	1.15		60		250		55	57
6	38	150.71	.63	.71	.97	3	60		250		56	58
5	40	151.77	.76	.93	1.06		60		250		56	58
4	42	153.07	1.05	1.29	1.25	3	62		250		56	58
3	44	154.27	1.05	1.29	1.25		62		250		56	58
2	46	155.49	1.00	1.23	1.22	3	62		250		57	58
1	48	156.52	.72	.89	1.03		62		250		57	58

t=55
27.76
27.22
t=45

Intercontinental Inc. S-0037R

Job Levey Co Operators Dagi Lot N ____ μ ____

Source Pellet Cooler Sampling Train No. ____ $\Delta H_@$ ____ Bar. Press. ____ in.Hg. B_{wo} ____ %

Date 3-18-77 Test 4 Run 2 Gasmeter coeff. ____ Amb. Temp. ____ °F Nozzle No. ____ Nozzle Dia. ____ in.

Traverse Point No.	Sampling Time (min)	Sample Volume (ft³)	Velocity Head (in. WC)	Orifice Meter (in. WC)	ΔV (mcf)	Vac. (inHg)	Stack Temp (°F) 1	Probe Temp (°F) 2	Oven Temp (°F) 3	Effluent Temp (°F) 4	Gasmeter temp IN (°F) 5	Gasmeter temp OUT (°F) 6
	(44)	( )										
A-24	50	157.71	.93	1.17	1.19	3	62		250		54	58
23	52	158.96	1.05	1.28	1.25		62		250		56	60
22	54	160.16	.96	1.17	1.20	3	62		250		56	60
21	56	161.41	1.05	1.29	1.25		62		250		57	59
20	58	162.61	.97	1.19	1.20	3	62		250		58	60
19	60	163.81	.97	1.19	1.20		62		250		59	60
18	62	165.09	1.00	1.23	1.25	3	63		250		60	61
17	64	166.30	.97	1.19	1.21		63		250		60	61
16	66	167.90	.80	.98	1.10	3	63		250		60	61
15	68	168.65	1.00	1.23	1.25		63		250		62	61
14	70	169.90	1.00	1.23	1.25	3	63		250		62	62
13	72	171.19	1.10	1.35	1.29		63		250		62	62
12	74	172.45	1.05	1.29	1.26	3	63		250		62	62
11	76	173.74	1.10	1.35	1.29		63		250		62	62
10	78	174.99	1.00	1.23	1.25	3	63		250		61	62
9	80	176.28	1.10	1.35	1.29		63		250		62	62
8	82	177.57	1.10	1.35	1.29	3	63		250		62	62
7	84	178.77	.95	1.16	1.20		63		250		62	62
6	86	180.06	1.10	1.35	1.29	3	63		250		60	60
5	88	181.26	.95	1.16	1.20		63		250		58	61
4	90	182.55	1.10	1.35	1.29	3	63		250		58	60
3	92	183.81	1.05	1.29	1.26		63		250		59	60
2	94	185.06	1.00	1.23	1.25	3	63		250		58	61
1	96	186.31	1.00	1.23	1.25		63		250		58	61

(1452) V_m = 57.88 $\Delta\bar{H}$ = 1.19 $\bar{t}_m$ = 58.0

K = 28.03
T = 526

— Interpoll Inc —

S-0037R

Sample Log Sheet

Job Peavey Co

Unit and Sampling Location Pellet Cooler

Date 3-18-77 Test 4 Run 3

Sample Train: Leak check: < 0.02 cfm at 15 in. Hg. (vac.) ☑

Particulate Sample Type and Number	Weights		
	Final	Tare	Difference
Filter # 666			.02203
Probe wash			.13901
(wet catch-organic)			(.00200)
(" " -inorganic)			(.00202)
Total (M_n)			.16104 g

Impinger ☑ Condenser ☐

Impinger Number	Weights		
	Final	Tare	Difference
1	99	100	-1
2	104	100	4
3	0	0	0
Drying Column	1220	1209	11
Total (M_{wo})			14 g

Orsat	Carbon Dioxide	Oxygen	Carbon Monoxide
1			
2			
3			
4			
5			
6			
7			
8			
Average			

form S-0046

Job Peavey Co Operators J. Stock L. Jennings Pitot No. 8 C_p .838

Source Pellet Cooler Sampling Train No. 4 $\Delta H_@$ 1.89 Bar. Press. _____ in.Hg. B_{wo} _____ %

Date 3-18-77 Test 4 Run 3 Gasmeter coeff. .9999 Amb. Temp. 35 °F Nozzle No. _____ Nozzle Dia. _____ in.

Traverse Point No.	Sampling Time (min)	Sample Volume (ft³)	Velocity Head (in.WC)	Orifice Meter (in.WC)	ΔV (mcf)	Vac. (inHg)	Stack Temp (°F) 1	Probe Temp (°F) 2	Oven Temp (°F) 3	Effluent Temp (°F) 4	Gasmeter temp IN (°F) 5	Gasmeter temp OUT (°F) 6
	(1615)	(186.57)										
A-24	2	187.83	1.05	1.29	1.26	3	64		250		48	54
23	4	189.12	1.10	1.35	1.29		64		250		48	54
22	6	190.31	.93	1.14	1.19	3	63		250		49	55
21	8	191.57	1.05	1.29	1.26		63		250		49	55
20	10	192.77	.95	1.17	1.20	3	63		250		51	56
19	12	193.97	.95	1.17	1.20		62		250		51	56
18	14	195.17	.95	1.17	1.20		62		250		51	56
17	16	196.28	.82	1.01	1.11	28	62		250		51	56
16	18	197.47	.93	1.14	1.19		62		250		51	56
15	20	198.66	.93	1.14	1.19		62		250		51	56
14	22	199.92	1.05	1.29	1.26	3	62		250		51	56
13	24	201.13	.97	1.19	1.21		62		250		51	56
12	26	202.35	.99	1.22	1.22		62		250		51	56
11	28	203.56	.97	1.19	1.21		62		250		51	56
10	30	204.85	1.10	1.35	1.29		62		250		51	56
9	32	206.14	1.10	1.35	1.29	3.1	62		250		51	56
8	34	207.43	1.10	1.35	1.29		62		250		51	56
7	36	208.64	1.00	1.23	1.21		63		250		51	56
6	38	209.83	.97	1.19	1.19		64		250		52	57
5	40	211.04	1.00	1.23	1.21	3.0	64		250		52	57
4	42	212.20	.91	1.12	1.16		64		250		52	57
3	44	213.49	1.10	1.35	1.29		64		250		52	57
2	46	214.70	1.06	1.23	1.21		64		250		52	57
1	48	215.91	1.00	1.23	1.21		64		250		52	57

Job Peavey Co Continued Operators Page 2 Pitot No. _____ C_p _____

Source _____ Sampling Train No. 4 $\Delta H_@$ 1.89 Bar. Press. _____ in.Hg. B_{wo} _____ %

Date 3-18-77 Test 4 Run 3 Gasmeter coeff. .9995 Amb. Temp. _____ °F Nozzle No. _____ Nozzle Dia. _____ in.

Traverse Point No.	Sampling Time (min)	Sample Volume (ft³)	Velocity Head (in. WC)	Orifice Meter (in. WC)	ΔV (mcf)	Vac. (inHg)	Stack Temp (°F) 1	Probe Temp (°F) 2	Oven Temp (°F) 3	Effluent Temp (°F) 4	Gasmeter temp IN (°F) 5	Gasmeter temp OUT (°F) 6
	(48)	(215.91)										
R-24	50	217.18	1.10	1.35	1.27	3.1	64		250		52	57
23	52	218.45	1.10	1.35	1.27		64		250		52	57
22	54	219.64	.97	1.17	1.19		64		250		52	57
21	56	220.83	.97	1.17	1.19		64		250		52	57
20	58	222.04	1.00	1.23	1.21	3.0	64		250		52	57
19	60	223.23	.97	1.17	1.19		64		250		52	57
18	62	224.39	.92	1.13	1.16		64		250		52	57
17	64	225.55	.92	1.13	1.16	3.0	64		250		52	57
16	66	226.82	1.10	1.35	1.27		64		250		52	57
15	68	227.96	.88	1.08	1.14		64		250		52	57
14	70	229.02	.77	.95	1.06	2.8	63		250		52	57
13	72	230.13	.83	1.02	1.11		62		250		52	57
12	74	231.24	.83	1.02	1.11		62		250		52	57
11	76	232.42	.94	1.16	1.18		62		250		52	57
10	78	233.51	.81	1.00	1.09		62		250		52	57
9	80	234.60	.81	1.00	1.09	2.9	62		250		51	56
8	82	235.79	.97	1.17	1.19		62		250		51	56
7	84	236.85	.77	.95	1.06		62		250		51	55
6	86	238.03	.95	1.17	1.18	3.0	62		250		50	55
5	88	239.24	1.00	1.23	1.21		62		250		50	55
4	90	240.22	.65	.80	.98		62		250		50	55
3	92	241.20	.65	.80	.98	2.6	62		250		50	55
2	94	242.18	.65	.80	.98		62		250		50	55
1	96	243.16	.65	.80	.98		62		250		50	55

(185.8) V_m=56.60 ΔH=1.15 Interpoll Inc. T_m=53.5 S.0017R

TEST #1 (#255-HV 41 CYCLONE) 2564 HART-CARTER

METHOD: MEASURE GRAIN LEVEL IN BIN #7 WHICH FEEDS CLEANER AND RECORD TIME AT OBSERVATION

BIN #7 CONTAINS 38 Bu/ft.

PERIOD	INITIAL DEPTH	INITIAL TIME	FINAL DEPTH	FINAL TIME	TOTAL VOL. (Bu)	TOTAL TIME (MIN)	RATE (Bu/h)
1	12'-4	10:00	21'-0½	10:56	331	56	355
2	21'-0½	10:56	35'-2	12:32	537	96	335
3	35'-2	12:32	66'-2	3:50	1178	198	357
1-3	12'-4	10:00	66'-2	3:50	2046	350	351

Product: OATS @ 37 lb/Bu.

TOTAL AVERAGE PROCESS RATE = 6.49 TPH

TEST #2 – (#312C – HV46 CYCLONE) CRIPPEN CLEANER, ELEVATOR ↑

METHOD: MEASURE GRAIN LEVEL IN BIN #12 WHICH FEEDS CLEANER AND RECORD TIME AT OBSERVATION.

BIN #12 CONTAINS 41 Bu/ft.

PERIOD	INITIAL DEPTH	INITIAL TIME	FINAL DEPTH	FINAL TIME	TOTAL VOL. (Bu)	TOTAL TIME (min)	RATE (Bu/HR)
1	6'-4½	8:49	11'-2	9:04	196	15	786 *
2	16'-0	9:27	17'-2½	9:35	49.5	8	372
3	17'-2½	9:35	18'-9	9:47	63.2	12	316 **
4	5'-7	11:33	6'-11	11:41	54.7	8	410
5	6'-11	11:41	8'-3½	11:49	56.4	8	423
6	8'-3½	11:49	11'-3½	12:06	123.0	17	434
7	11'-3½	12:06	17'-8	12:44	261	38	413
4-7	5'-7	11:33	17'-8	12:44	495	71	419

* FEED RATE WAS REDUCED @ 9:15 BECAUSE CRIPPEN CLEANER CAPACITY WAS EXCEEDED.

** FEED RATE WAS INCREASED @ 9:53 BECAUSE FLOW RATE WAS SIGNIFICANTLY BELOW NORMAL.

PRODUCT: OATS @ 37 lb/Bu

AVERAGE PROCESS RATE during PERIODS (4-7) = 7.75 TPH

SEED PLANT

TEST # 3 - (#245 - HV81 CYCLONE) CRIPPEN CLEANER, ↑

METHOD: MEASURE GRAIN LEVELS IN BINS #43 AND #45 SIMULTANEOUSLY AND RECORD TIME AT OBSERVATION

BIN # 43 CONTAINS 45 Bu/ft.

BIN # 45 CONTAINS 21 Bu/ft.

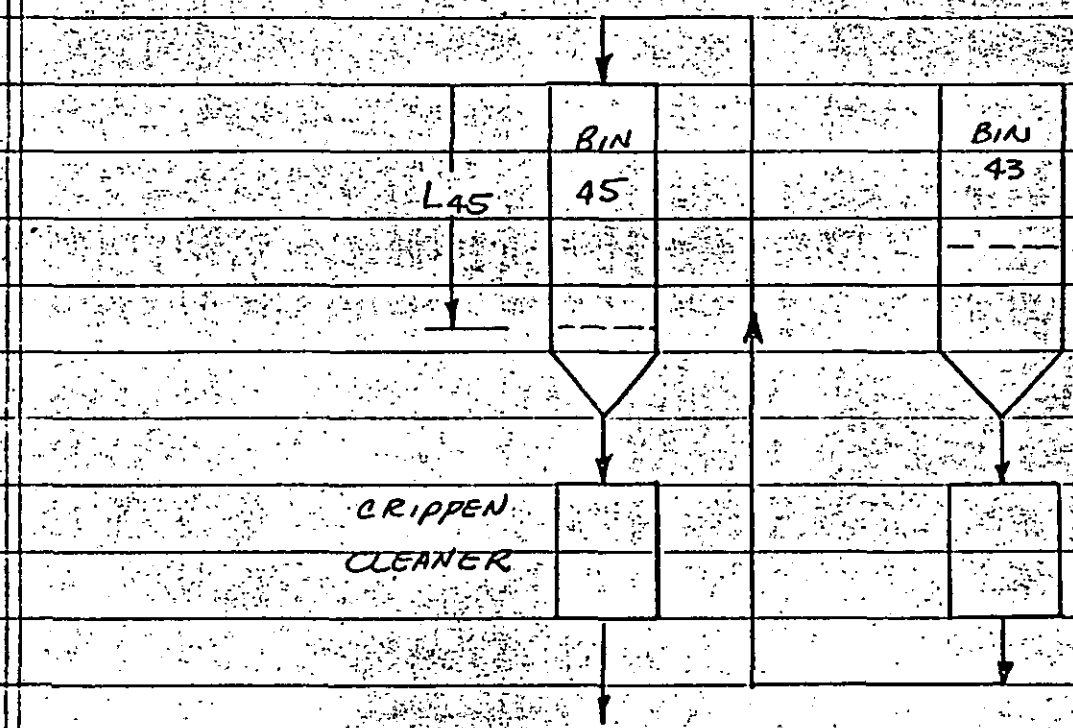

PERIOD	INITIAL L_{43}	INITIAL TIME	FINAL L_{43}	FINAL TIME	INITIAL L_{45}	INITIAL TIME	FINAL L_{45}	FINAL TIME
1	18'-6½	10:36	21'-7	11:07	42'-0½	10:38	39'-10½	11:09
2	21'-7	11:07	28'-4	12:11	37'-10½	11:09	36'-5	12:13
3	28'-4	12:11	34'-4	1:04	36'-5	12:13	32'-9½	1:05
4	34'-4	1:04	44'-3	2:38	32'-9½	1:05	28'-1	2:40

TEST #3 - CONT.

PERIOD	BIN #43 TOTAL VOL. (BU)	BIN #43 TOTAL TIME (MIN)	BIN #43 RATE R_{43} (BU/HR)	BIN #45 TOTAL VOL. (BU)	BIN #45 TOTAL TIME (MIN)	BIN #45 RATE R_{45} (BU/HR)	CRIPPEN RATE (BU/HR) ($R_{43} - R_{45}$)
1	136.9	31	2650	45.5	31	88.1	176.9
2	303.7	64	284.7	72.6	64	68.1	216.6
3	270.0	53	305.7	76.1	52	87.8	217.9
4	446.2	94	284.8	98.9	95	62.5	222.3
1 - 4	1156.8	242	286.8	293.1	242	72.7	214.1

PRODUCT: WHEAT @ 60 lb/BU.

AVERAGE PROCESS RATE DURING PERIODS (1-4) = 6.42 TPH

TEST #4 - (#51 - HV 80 CYCLONE) PELLET COOLER

METHOD: WEIGH PELLETS PRODUCED DURING A MEASURED TIME INTERVAL.

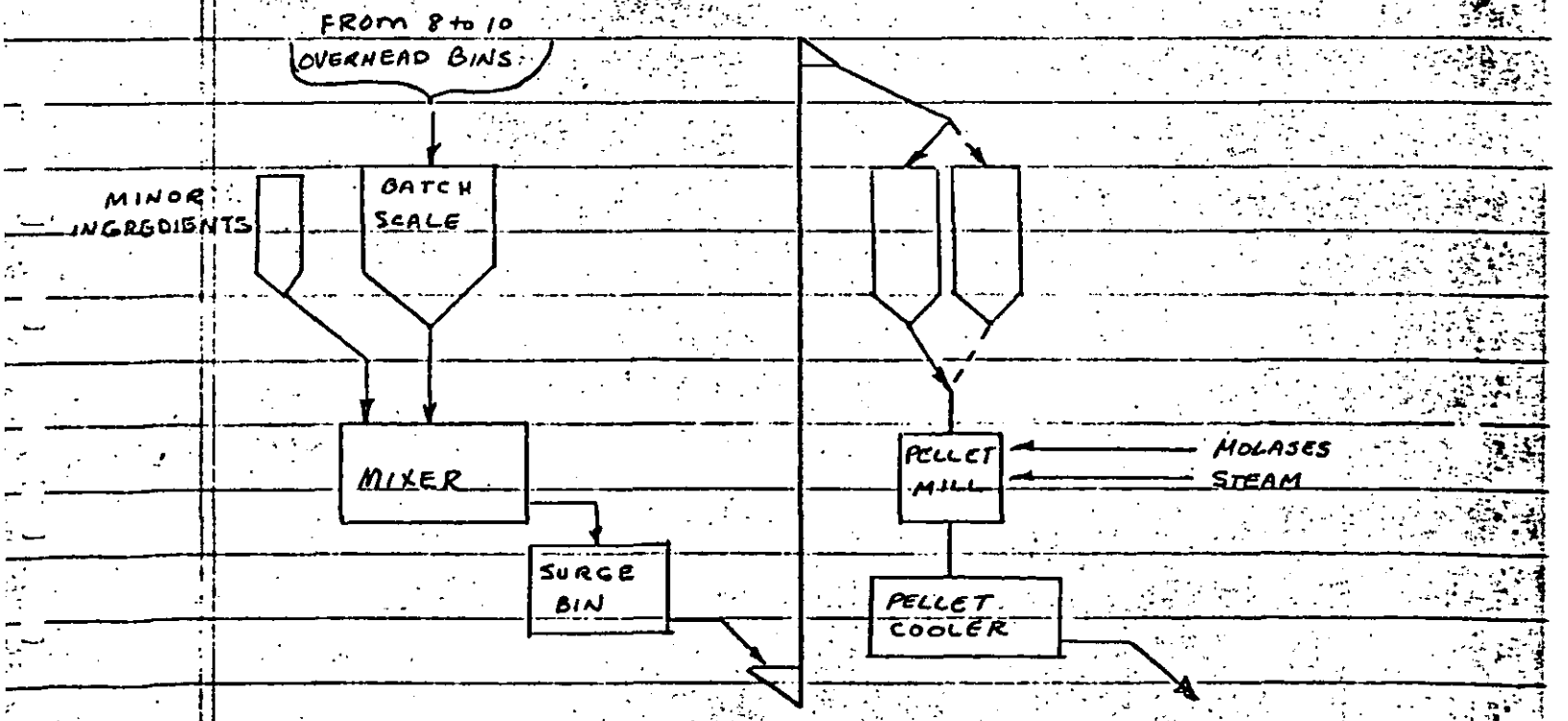

TEST #4 - CONT.

BATCH #1 DAIRY FEED — "GRAIN STREATCHER 5600"

BATCH WEIGHT = 3769 lb. + MOLASES @ 100 lb/TO

+ MOISTURE @ 4% ADDED + APPROX. 100# MINOR

BATCH WEIGHT = 4216 lb.

PERIOD	SAMPLE WEIGHT	TIME PERIOD	RATE (lb/MIN)	RATE (TPH)
1	70.6 lb.	30 sec.	141.2	4.24 *
2	90.7	30	181.4	5.44
3	93.0	30	186.0	5.58

* PELLET MILL RATE WAS INCREASED DURING TEST - THE INCREASED RATE ACCOUNTED FOR APPROX. 2/3 of BATCH.

AVERAGE PELLET MILL RATE = 5.09 TPH

BATCH #2 DAIRY FEED - "DAIRY RATION 5390"

BATCH WEIGHT = 3758 lb. + MOLASES @ 100 lb/TON

+ MOISTURE @ 4% ADDED + APPROX. 100# MINOR

BATCH WEIGHT = 4204 lb

PERIOD	SAMPLE WEIGHT	TIME PERIOD	RATE (lb/MIN)	RATE (TPH
1	88.2 lb	30 sec.	176.4	5.29
2	77.9	30	155.8	4.67
3	72.5	30	145.0	4.35

* PELLET MILL WAS DECREASED PRIOR TO START OF TEST

AVERAGE PELLET MILL RATE = 4.51 TPH

TEST #4 - CONT.

BATCH #3 HOG FINISHER - "HOG FINISHER 4241"

BATCH WEIGHT = 3730 lb + MOLASES @ 100 lb/TON

+ MOISTURE @ 4% ADDED + APPROX. 100# MINORS

BATCH WEIGHT = 4173 lb.

PERIOD	SAMPLE WEIGHT	TIME PERIOD	RATE (lb/min)	RATE (TPH)
1	80.4 lb	30 sec	160.8	4.82
2	79.2 lb	30 sec	158.4	4.75

AVERAGE PELLET MILL RATE = 4.78 TPH

Jerry Meyer
Project Engineer

Peavey Company
730 Second Avenue South
Minneapolis, Minnesota 55402

SUBJECT FIELD DUST SYSTEM DATA
FEED MILL FILTER SYSTEM
VALLEY CITY, N.D.

SHEET NO. OF
PROJECT NO. 60.02
FILE VALLEY CITY

BY JM DATE 3-23-77 CHKD

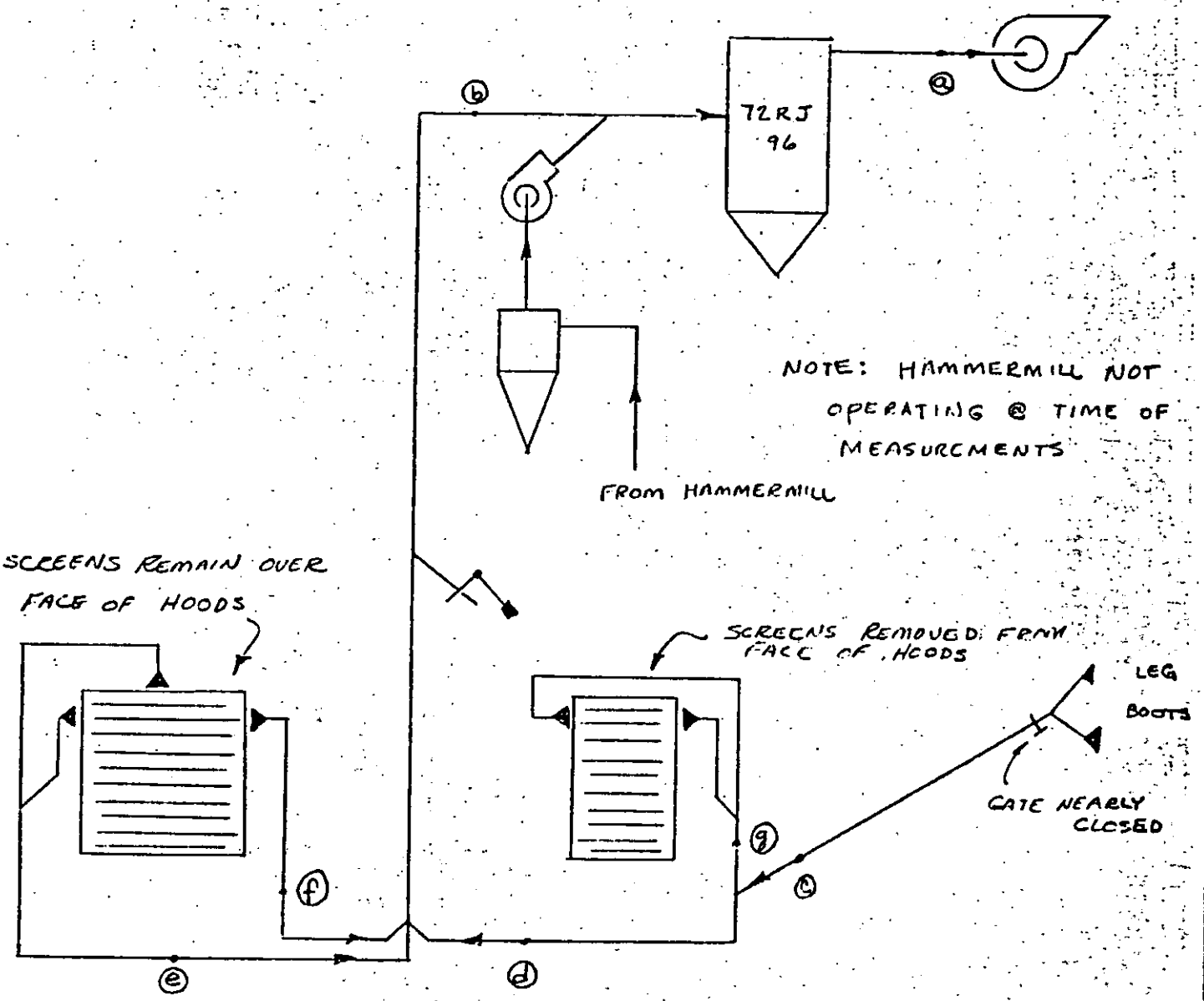

POINT	SP	$\overline{VP}$	DUCT DIA.	$\overline{V}$	DUCT AREA	CFM
a	-9.2	.08	36"	1133	7.069	8010
b	-8.1	.15	26"	1551	3.687	5720
c	-8.7	1.35	8"	4653	.3491	1620
d	-8.1	.40	16"	2533	1.396	3540
e	-7.6	.06	18"	981	1.767	1730
f	-7.6	.05	13"	896	.9218	830
g	—	—	—	—	—	1920

APPENDIX D

PROCESS RATE DATA*

*Process rate information was supplied by the Peavey Company

APPENDIX E

VISIBLE EMISSION CERTIFICATION

(J. W. Stock)

MINNESOTA POLLUTION CONTROL AGENCY
1935 W. County Road B2, / Roseville, Minnesota 55113

612-296-7373

This is to certify that,

JEFF STOCK

attended and fulfilled the requirements of the

VISIBLE EMISSION EVALUATION RE-CERTIFICATION COURSE

offered by

THE MINNESOTA POLLUTION CONTROL AGENCY

on

SEPTEMBER 14, 1976

During the course of the test an average deviation of less than 7.5% for a set of 25 white smoke and a set of 25 black smoke was maintained and none of the readings deviated by 20% or more.

By achieving the above accuracy, certification as a "Smoke Reader" is granted for a period of six months from the date of the test.

James L. Kolar
JAMES L. KOLAR
Instructor
Pollution Control Specialist
MPCA, DAQ

Richard J. Sandberg
RICHARD J. SANDBERG
Instructor
Pollution Control Specialist
MPCA, DAQ

AN EQUAL OPPORTUNITY EMPLOYER

APPENDIX F

PROCEDURES

PROCEDURES

The particulate emission rates were determined per Federal Register, Volume 36, Number 247. In this procedure, a preliminary velocity profile of the gases in the flue is obtained by means of a temperature and velocity traverse. On the basis of these values, sampling nozzles of appropriate diameter are selected to allow isokinetic sampling, a necessary prerequisite for obtaining a representative sample.

The sampling train consists of a glass-lined sampling probe equipped with a type S pitot and a thermocouple. The probe is attached to a sampling module which houses the all-glass in line filter holder in a temperature controlled oven. In addition, the sampling module also houses the impinger case and a silica gel drying column. The sampling module is connected by means of an umbilical cord to the control module which houses the dry test gasmeter, the calibrated orifice, two rotameters, a leakless pump, two inclined manometers, a direct readout temperature monitor and all controls required for operating the sampling train.

Particulate samples were collected as follows: The sample gas was drawn in through the sampling probe isokinetically and passed through a 4-inch diameter Gelman Type A/E glass fiber filter. The particulates were removed at this point and collected on the filter. The gases then passed through an ice-cooled impinger train and a desiccant-packed drying column which quantitatively sorb all moisture from the sample gas stream after which the sample gas passed through the pump and the dry test gasmeter which integrates the sample gas flow throughout the course of the test. A calibrated orifice attached to the outlet of the gasmeter provides instantaneous flow rate data. After a given particulate sampling was completed, the filter was carefully removed and placed in a clean Petri dish. The sampling probe was quantitatively washed with brushing and the washings stored in a polyethylene sample bottle. The samples were labeled and returned to the laboratory where they were analyzed.

The probe washes were evaporated and dried at ambient pressure and temperature and weighed to the nearest 0.1 milligram. The filter catches were also dried and weighed in this manner. The reported particulate catch is the sum of probe wash and the filter catches.

The impinger catches were analyzed using a chloroform-ether extraction which was evaporated to dryness and weighed to determine the organic fraction. The remaining water was then evaporated to dryness at 80 °C. The weight of the remaining solids is reported as the inorganic fraction of the wet catch.

APPENDIX G

SAMPLING TRAIN DESCRIPTION

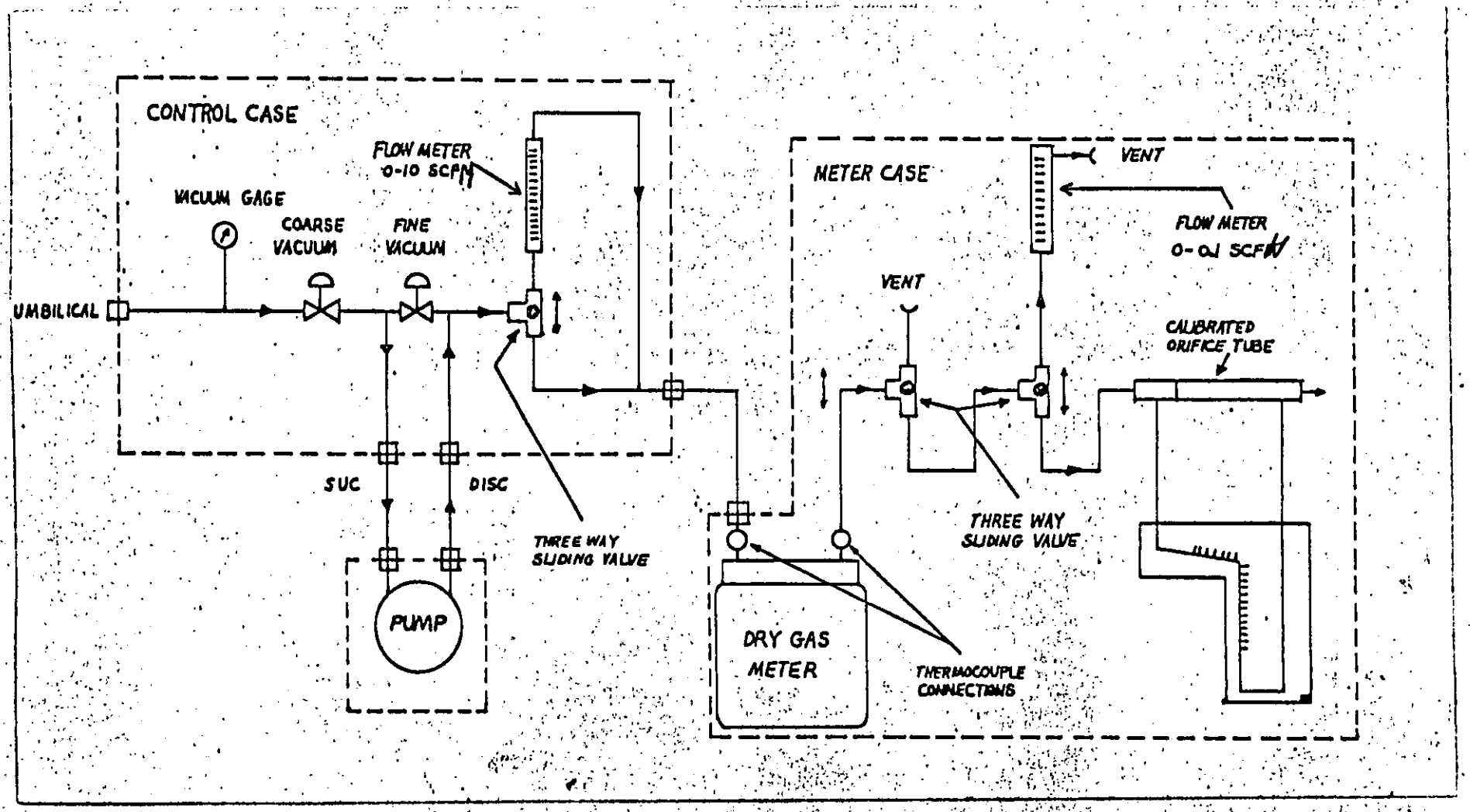

INTERPOLL INC.

Form S-0081A

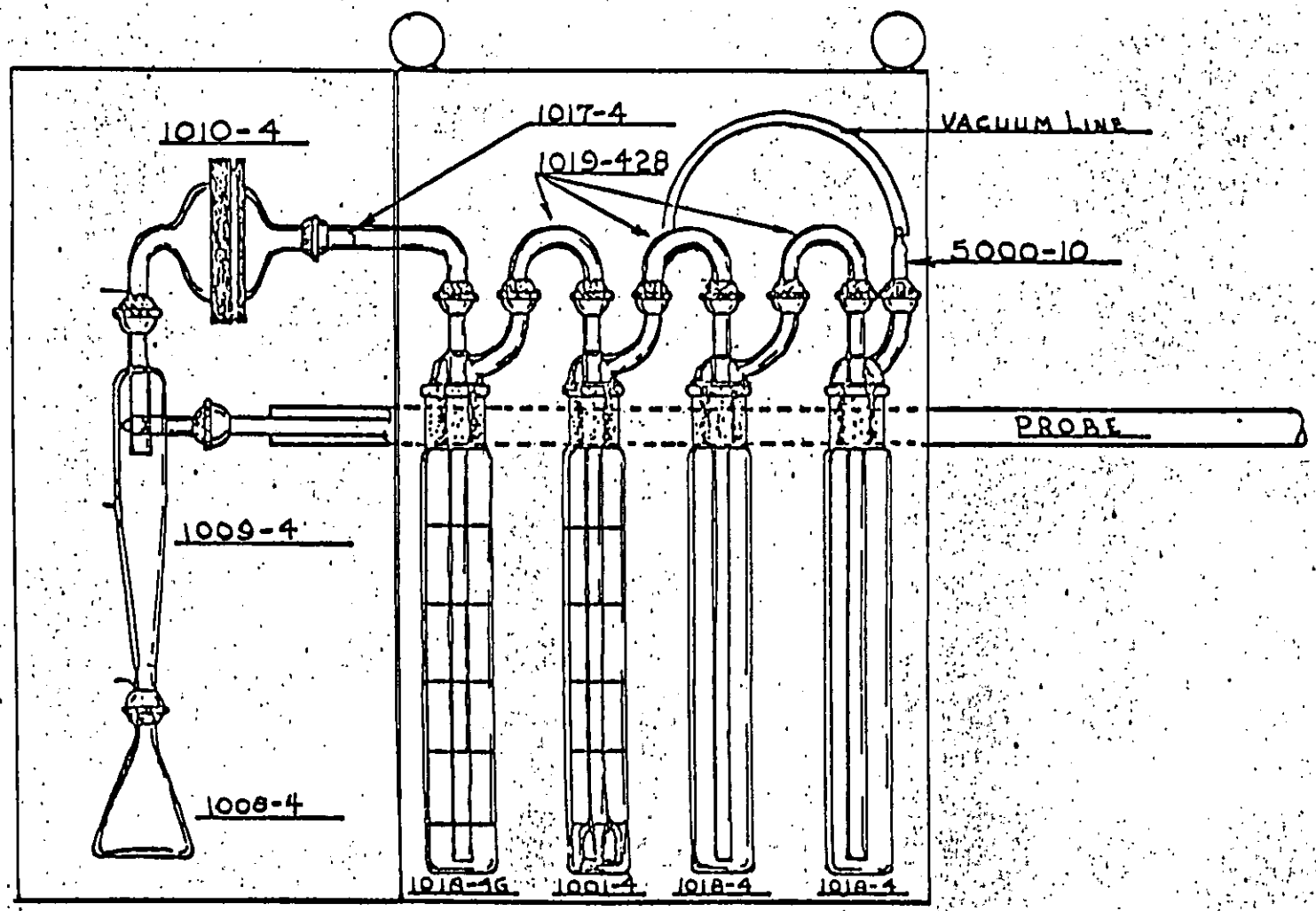

METHOD 5

GLASSWARE TRAIN E.P.A./A.P.C.O.

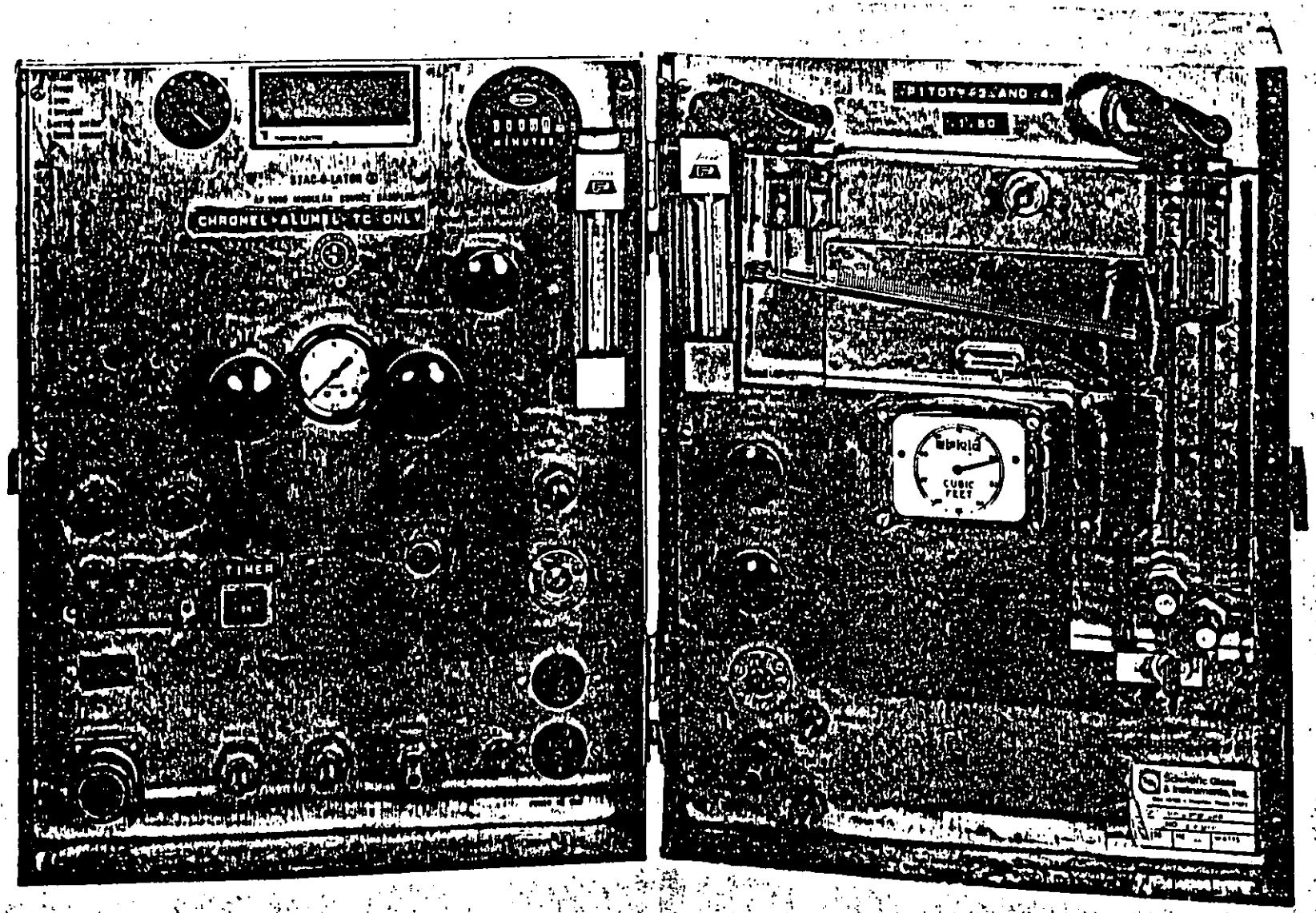
STAC-O-LATOR
CHROMEL-ALUMEL TC ONLY
MINUTES
TIMER
PITOTS #3 AND #4
CUBIC FEET

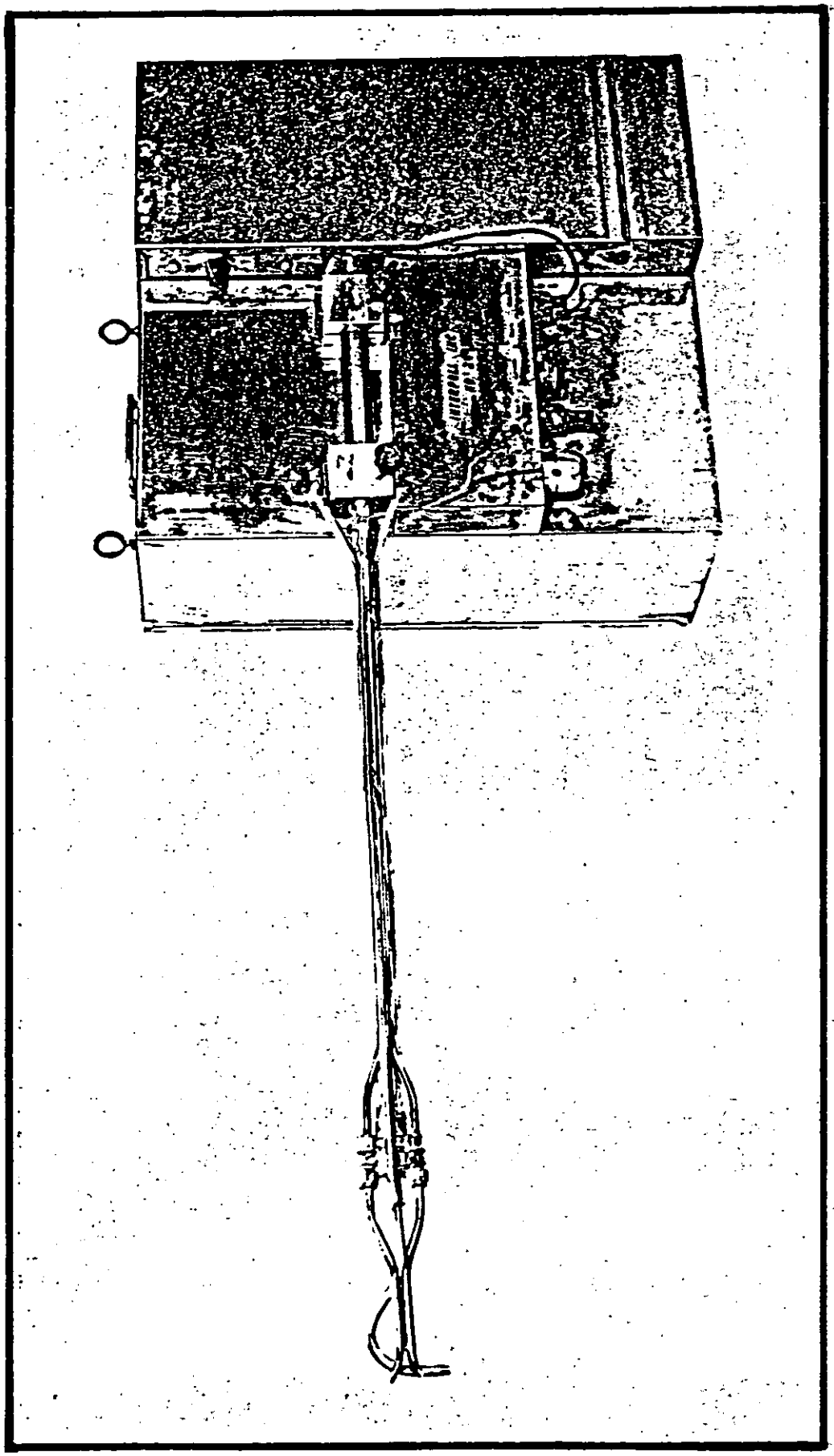

APPENDIX H

SAMPLING TRAIN
CALIBRATION DATA

Model AP-5000 Scientific Glass Calibration Sheet

Serial No. _____

Interpoll Train No. 4

1. Temperature check. Check appropriate square if designated sensor is ± 3° F at specified temperature

Date of Last Calibration 12-13-76

Stack:	200	1000	Oven:	100	300
Yes	☒	☒	Yes	☒	☒
No	☐	☐	No	☐	☐

Gas Meter Inlet:	100	Gas Meter Outlet:	100
Yes	☒	Yes	☒
No	☐	No	☐

2. Pitot Tube Calibration

Date of Last Calibration 2-25-77

Measured Coefficient .838

3. Calibrated Orifice

Date of Last Calibration 2-28-77

Measured Orifice Constant ΔH@ 1.89

4. Gas Meter - Unit No. 4

Date of Last Calibration 3-10-77

Correction Factor (γ) .9999

5. Nozzles

Date of Last Calibration 3-7-77

Nozzle diameter (d_n) _____

S-0042

PEAVEY COMPANY

Technical Center
11 Peavey Road
Chaska, Minnesota 55318

RECEIVED
APR 25 1977
ENVIRONMENTAL
ENGINEERING

April 21, 1977

Mr. Kevin Kiemele
North Dakota State Department of Health
State Capitol
Bismarck, North Dakota 58505

Dear Mr. Kiemele:

Enclosed is a copy of the report issued by Interpoll, Inc. on tests run on emission points at Peavey's Valley City, North Dakota facility. We understand that the tests showed our equipment to be working satisfactorily, and we anticipate receiving our operating permit for this plant as soon as possible.

Please contact us if you have any questions.

Sincerely,

Carolyn Wagtskjold

Carolyn Wagtskjold
Project Engineer

mks

Encl: