Note: This is a reference cited in *AP 42, Compilation of Air Pollutant Emission Factors, Volume I Stationary Point and Area Sources.* AP42 is located on the EPA web site at www.epa.gov/ttn/chief/ap42/

The file name refers to the reference number, the AP42 chapter and section. The file name "ref02_c01s02.pdf" would mean the reference is from AP42 chapter 1 section 2. The reference may be from a previous version of the section and no longer cited. The primary source should always be checked.

AP-42 Section Number: 9.9.4

Reference Number: 7

Title: Particulate Emissions From Alfalfa Dehydrating Plants - Control Costs and Effectiveness

EPA 650/2-74-007

US EPA

January 1974

AP-42 Section 9.9.4
Reference 7
Report Sect.
Reference

EPA-650/2-74-007

Environmental Protection Technology Series

January 1974

PARTICULATE EMISSIONS FROM ALFALFA DEHYDRATING PLANTS -- CONTROL COSTS AND EFFECTIVENESS

Office of Research and Development
U.S. Environmental Protection Agency
Washington, DC 20460

EPA-650/2-74-007

PARTICULATE EMISSIONS FROM ALFALFA DEHYDRATING PLANTS -- CONTROL COSTS AND EFFECTIVENESS

by

Kenneth D. Smith

American Dehydrators Association
5800 Foxridge Drive
Mission, Kansas 66202

Grant No. R801446
ROAP No. 21ADJ-83
Program Element No. 1AB012

EPA Project Officer: G.S. Haselberger

Control Systems Laboratory
National Environmental Research Center
Research Triangle Park, North Carolina 27711

Prepared for

OFFICE OF RESEARCH AND DEVELOPMENT
U.S. ENVIRONMENTAL PROTECTION AGENCY
WASHINGTON, D.C. 20460

January 1974

This report has been reviewed by the Environmental Protection Agency and approved for publication. Approval does not signify that the contents necessarily reflect the views and policies of the Agency, nor does mention of trade names or commercial products constitute endorsement or recommendation for use.

ABSTRACT

This report presents the results of an extensive field-testing program to characterize particulate emissions from alfalfa dehydrating plants and to evaluate the cost/effectiveness of available control methods. Testing was conducted during the growing seasons of 1971, 1972, and 1973 at fourteen plants in Kansas, Nebraska and Colorado.

In the first testing phase (1971), cyclone effluents were sampled to determine mass rates and size distributions of particulates emitted from the drying, grinding, and pelleting operations, under measured process operating conditions. Emission factors are presented for each of the unit operations. Test results show that emissions from the drying operation comprise more than 75% of the total emissions, and are the most difficult to control. Dryer emissions vary with process-weight-rate, hay quality, dryer operation, and cyclone collector efficiency. Typically, a 60% reduction in dryer emissions is required to meet the common process-weight-rate standard.

In the second testing phase (1972), benchmark performance data were obtained on two pilot-scale and three full-scale wet scrubbers and on two full-scale control systems which recycle effluent from the primary cyclone. During each performance test, process operating conditions were monitored. Performance data for the wet scrubbers include fractional collection efficiency, gas throughput, pressure drop, and water usage. Test results indicate that medium efficiency wet scrubbers have the potential to bring alfalfa dryer emissions into compliance with process-weight-rate standards, although problems of water clarification and sludge disposal remain to be solved. The results also indicate that the partial recycle of primary cyclone effluent back to the dryer furnace holds promise for the significant reduction of particulate emissions, and may provide a substantial fuel savings.

In the third phase (1973), full scale control devices/systems were tested to determine the effectiveness and freedom from operating problems of an intermediate pressure drop scrubber and recycle systems, and the effectiveness of plant modifications and operating procedures in reducing particulate emissions. Periodic source testing was performed under monitored process conditions although testing was limited to particulate rate measurements at the outlets of control devices/systems. In the case of wet collectors, equipment and methods for water treatment and sludge disposal were also studied. The results of this phase demonstrate that dehydrating plants can be operated in compliance of emission standards through plant modifications and operating procedures. The results further show that partial recycle of the primary effluent back to the furnace and/or the use of wet scrubbers are very effective methods of substantially reducing the particulate emissions. However, the results suggest that neither recycle systems nor wet scrubbers have the capability of bringing a grossly dirty plant into compliance, i.e., a plant which produces excessive smoke as a result of poor operating procedures and/or process controls.

Based on cost figures submitted by the control equipment manufacturers, equipment and installation costs for a wet scrubber and water treatment system range from $35,000 to $45,000 and annual operating costs are about $2,000. The installed cost of a recycle system is about $20,000 and a net operating savings of $2,000 is realized because of decreased fuel usage. These figures apply to a model control problem which requires a control efficiency of about 60% for an effluent of 30,000 acfm.

This study was funded by the U. S. Environmental Protection Agency and by the American Dehydrators Association. Midwest Research Institute conducted the field tests and performed part of the engineering and cost evaluations.

CONTENTS

Section		Page
I	Conclusions	1
II	Recommendations	3
III	Introduction	7
IV	Objectives	11
V	Description of Control Equipment	13
	Fisher-Klosterman	13
	APPCOR	13
	Koch	17
	Air Conditioning Corp.	20
	Thompson	20
	Heil	23
	Abilene Plant Modifications	25
	Lawrence Plant Modifications	25
	Neodesha & Berthoud Plant Modifications	29
VI	Measurement Techniques, Equipment and Procedures	31
VII	Measured Performance Data and Control Effectiveness	37
	Fisher-Klosterman	37
	APPCOR	37
	Koch	41
	Air Conditioning Corp.	46
	Particle Size Distributions	49
	Fractional Collection Efficiency	49
	Summary of Wet Scrubbers	51

CONTENTS - Continued

Section		Page
VII (cont.)	Water Clarification	52
	Thompson	54
	Heil	58
	Summary of Recycle	62
	Effect of Recycle on Product Quality	63
	Abilene	63
	Neodesha and Berthoud	66
	Comparison With the Bay Area Standards	66
	Visual Opacity	72
VIII	Effect of Process Conditions	73
	Single-Plant Correlation	73
	Multiplant Correlation	74
	Cyclone Collection Efficiency	76
	Emission Factors	77
IX	Control Costs - Model Problem	79
X	Sampling Log, Performance and Process Data, and Plant Equipment Specifications	83
XI	Acknowledgements	109
XII	References	111

FIGURES

		Page
1	Fisher-Klosterman Wet Collector	14
2	Neodesha Plant Interfacing With Pilot-Scale Wet Collectors	15
3	APPCOR Wet Collector	16
4	Koch Wet Collector	18
5	Plant Interfacing for Full-Scale Wet Collectors	19
6	Thompson Recycle System	21
7	Topeka Plant Interfacing With Thompson Recycle System	22
8	Grand Island Plant Interfacing With Heil Recycle System	23
9	Dundee Plant Interfacing	24
10	Abilene Plant Interfacing	26
11	Lawrence Plant Interfacing	27
12	Neodesha and Berthoud Plant Interfacing	29
13	Straightening Vanes	35
14	Testing Platform	35
15	Testing Platform Side View	36
16	Particle Size Distributions - F/K Wet Collector	39
17	Particle Size Distributions - APPCOR Wet Collector	40
18	Particle Size Distributuions - Koch Wet Collector (Oxford)	43
19	Particle Size Distributions - Koch Wet Collector (Rozel)	44
20	Particle Size Distributions - ACC Wet Collector	48
21	Fractional Collection Efficiency Curves	50
22	Particle Size Distributions - Thompson Recycle System	56
23	Particle Size Distributions - Heil Recycle System	60

FIGURES - Continued

		Page
24	Control Effectiveness versus Bay Area Emission Standard	68
25	Control Effectiveness versus Bay Area Emission Standard	69
26	Control Effectiveness versus Bay Area Emission Standard	70
27	Control Effectiveness versus Bay Area Emission Standard	71
28	Calculated Fine Particle Emissions (Smaller Dryers)	75

TABLES

No.		Page
1	Testing Program - Equipment and Plants	10
2	Process Parameters Monitored During Testing	32
3	Fisher-Klosterman Performance Data	38
4	APPCOR Performance Data	38
5	KOCH (Oxford) Performance Data	42
6	KOCH (Rozel) Performance Data	42
7	KOCH (Oxford) 1973 Performance Data	45
8	Air Conditioning Corporation Performance Data	47
9	Thompson Performance Data - Topeka	55
10	Thompson Performance Data - St. Marys	57
11	Heil Performance Data - Grand Island	59
12	Heil Performance Data - Dundee	61
13	Effect of Exhaust Gas Recycling on Carotene and Xanthophyll Stability	64
14	Abilene Performance Data	65
15	Neodesha and Berthoud Performance Data	67
16	Visual Opacity Readings	72
17	Comparative Efficiencies of Primary Cyclone Collectors	76
18	Uncontrolled Emission Factors	78
19	Model Problem Data Form - Performance and Cost Data - Model Control Problem	80
20	Model Problem Cost Data	82
21	Sampling Log	84
22	Performance and Process Data Calculation Factors	88
23	Fisher-Klosterman/Neodesha Performance and Process Data Dryer Conditions	89
24	APPCOR/Neodesha Performance and Process Data Dryer Conditions	90

TABLES - Continued

No.		Page
25	Koch/Oxford Performance and Process Data Dryer Conditions	91
26	Koch/Rozel Performance and Process Data Dryer Conditions	92
27	ACC/Lexington Performance and Process Data Dryer Conditions	94
28	Thompson/Topeka Performance and Process Data Dryer Conditions	95
29	Heil/Grand Island Performance and Process Data Dryer Conditions	98
30	Abilene Performance and Process Data	100
31	Koch/Oxford Performance and Process Data (1973)	101
32	Koch/Lawrence Performance and Process Data	102
33	Thompson/St. Marys Performance and Process Data	103
34	Neodesha Performance and Process Data	104
35	Berthoud Performance and Process Data	105
36	Heil/Dundee Performance and Process Data	106
37	Dryer Specifications	107
38	Bay Area Process Weight Table	108

SECTION I

CONCLUSIONS

The source testing program conducted by the American Dehydrators Association during the past three summers has provided a substantial amount of information on the characteristics of particulate emissions from alfalfa dehydrating plants and the effectiveness of available control methods and systems. It now appears possible for each dehydrator to plan and schedule a technically and economically sound strategy for the control of particulate emissions to meet the Bay Area Process Weight Rate Standard.

? San Fran?

The test program has shown that the quantity and size distribution of emissions from the drying operation are strongly dependent on the following conditions: a) percent of production capacity (based on the dry throughput corresponding to rate of evaporative capacity and specified moisture in the green chops); b) hay quality (protein, moisture content, insect damage, age, foreign material, etc.); and c) the percentage of moisture in the dry chops. Since low hay quality and high production rate normally occur together, high productivity emissions may exceed low productivity emissions manyfold.

Drying emissions a function of:

Particle size distribution measurements have shown that the primary cyclone emissions (drier emissions) are comprised of mechanically created particles and heat generated particles. The particles created mechanically are generally larger than 1 micron and are referred to herein as dust. The smoke or heat created particles are generally in the submicron range.

As a consequence of drying, especially overdrying which frequently occurs with high productivity, a very fine particulate smoke is generated. Although the smoke may constitute only a small mass emission, it scatters light very effectively and may frequently result in noncompliance with visual opacity regulations. Moreover, the smoke readily penetrates conventional medium efficiency control devices making effective control practically impossible. Control of dryer generated particulate emissions is also complicated by the large volume of moist carrier gases.

During the testing program, it was learned that the visual appearance of a plume is not a reliable indicator of compliance with a mass limit regulation. If overdrying occurs at a plant where the primary collector is relatively efficient, the opacity limit might be exceeded even though total mass emissions are in compliance with the mass limit regulation. On the other hand, good dryer operation at a plant with an inefficient primary cyclone may result in noncompliance with the mass limit regulation even though the plume (after steam dissipation) is in compliance with opacity regulations.

Emissions from the grinding and pelleting operations consist of moderately coarse particles carried by a relatively dry air stream. Additional fine particles are generated by these operations if the alfalfa has been overdryed. At some plants, the hammermill is the production bottleneck, and the material is overdryed to increase throughput.

grinding & pelleting

The testing program has demonstrated the capability of bringing alfalfa dehydrating plants into compliance through process modifications and operating procedures. Compliance was based on production conditions at or above rated capacity and with average quality (17% protein) hay. The question still remains of whether it is possible to operate in compliance under conditions of low hay quality and high production rate.

The performance testing of wet scrubbers and recycle systems for the control of particulate emissions has demonstrated that both types of systems are effective in reducing emissions. However, in all cases, the test plants were well "tuned" prior to testing of a control system so that uncontrolled emissions were probably well below the average for the industry. Dryer controls were checked and adjusted and dryers were carefully operated so that the generation of smoke was minimized. In some cases, plants were operated below rated capacity during testing. In other words, the results are indicative of relatively clean plants which are not representative of the industry as a whole.

Although performance test results are encouraging, operational problems remain to be solved. The wet scrubber systems have attendant problems of water treatment and sludge disposal - more testing and development work is needed to provide practical and reliable solutions. The systems which recycle effluent from the primary collector require more careful plant operation and condensation in the recycle line can be a problem.

Recycle systems offer attractive fuel savings, but this advantage may be easily exaggerated. Recycle of primary cyclone effluent back to the front end of the dryer increases dryer efficiency at lower evaporation rates; but, as the evaporation rate is increased, the amount of recycle must be reduced to maintain sufficient excess air and the dryer itself becomes more efficient. As a result, if the dryer is operated near capacity, the fuel savings may become insignificant.

Equipment costs for the wet collectors, based on data submitted by the manufacturers, are in the range of $15,000 to $25,000 including about $5,000 for a water treatment system. Installation costs average about $15,000, and annual operating costs average about $2,000 including manpower for equipment maintenance.

Equipment and installation costs for retrofit of the recycle systems to an existing plant are about $20,000. There may be a net savings in annual operating costs because of decreased fuel usage.

The test data indicate that partial recycling of the primary cyclone effluent back to the furnace had no effect on carotene or xanthophyll stability under the conditions of these tests.

The total particulate emissions from an alfalfa dehydrating plant, without emission control, average less than 20 lbs./ton of pellet or meal production.

SECTION II

RECOMMENDATIONS

There are several options available for the control of particulate emissions from alfalfa dehydrating plants. The first, most logical approach, regardless of subsequent measures, is the proper maintenance and operation of the alfalfa harvesting and dehydrating equipment. Proper equipment operation is essential for the reduction of smoke which once generated is virtually impossible to collect. Harvester knives should be sharp and properly adjusted. Feeder discharge should be uniform. Careful attention should be given to temperature controls and balancing of gas flows. Furnace design and deficiencies should be corrected where long flames and flame impingement are troublesome. Cyclone collectors should be designed and operated to achieve acceptable collection efficiencies. Hammermill capacity should be adequate and hammer and screen maintained properly. These steps, plus some reduction in plant throughput, especially under conditions of low hay quality, have been demonstrated to bring plants into compliance. However, the reduction of emissions by reducing throughput might well be the most costly approach.

for primary cyclone

Partial recycle of the primary cyclone effluent back to the furnace appears to be the second most logical step to controlling the particulate emissions from alfalfa dehydrating plants. The test results show that recycle can substantially reduce particulate emissions, may reduce fuel consumption, and would reduce the net amount of gas to be treated if a scrubber, or other control device, has to be added. There is a potential for operating problems with recycle as a result of condensation in the recycle lines. Recycle, and other operating procedures designed to produce higher moisture dry chops (10% to 14%), may cause plugging of the hammermill and other parts of the system unless the total plant is scaled for this type of production.

The final step, if necessary, to bring a plant into compliance, would be to install a medium energy wet scrubber. The test results indicate that a scrubber with 4" to 6" of water pressure drop will bring the particulate emissions down by at least 50%. If the particulate emissions consist primarily of dust particles, a medium energy wet scrubber would almost certainly bring the plant into compliance. Although the scrubber would not be highly effective on the submicron smoke particles, it would do a good job on the dust emissions and might improve the appearance of the smoky plume considerably. There is a strong possibility that a plant could not be brought into compliance with visual opacity regulations by use of only a wet scrubber. Therefore wet scrubbers are not recommended as the first control approach.

The above comments have dealt only with the control of emissions from the primary cyclone. There is still the problem of particulate emissions from the hammermill system and pellet cooling system. There should be no problem in cleaning up the pellet cooler emissions through good engineering and well designed equipment. In general, the best approach to controlling the particulate emissions from the hammermill system cyclone is by direct filtration with a bag house.

other cyclones

no add-on control needed on pellet cooler

The potential for fires in the bag house can, at least, be reduced with the use of a "spark out" loop; i.e., extend the length of the air line from the cyclone collector to the bag house sufficiently for an ignited dust particle to have time to burn out before it reaches the bag house. A 60' air line has worked satisfactorily, but may not be the optimum length.

Hammermill emissions have been satisfactorily controlled by recycling a large portion of the effluent from the hammermill system cyclone collector back to the hammermill. The remaining portion of the air stream (15% to 30%) is usually bled off to the primary cyclone in order to prevent excessive heat build up in the hammermill. This approach requires a good degree of expertise if the hammermill recycle system is to function properly and not cause operating problems.

recycle back to primary cyclone

Another approach which has been used in the industry to control hammermill emissions is to discharge the hammermill cyclone effluent into the primary cyclone. This technique has not been demonstrated through the testing program to be an effective way of controlling the hammermill emissions per se.

The following is a suggested check list for an alfalfa dehydrating plant control strategy.

1. Survey and characterize plant: thoroughly assess the operating condition of the plant including the performance characteristics of all equipment, design compatibility, and maintenance requirements. Particularly important are: the drier-fuel control system; the performance of the primary collector; and the operational limit for dry chops moisture. Review plans and set priorities for replacing equipment and generally upgrading the plant.

2. Upgrade plant operations: maintain and upgrade plant to achieve good operating standards as determined in step 1. This is particularly important with regard to drier controls and primary cyclone collector performance. It may be necessary to increase hammermill capacity to permit processing of dry chops having a moisture content of around 10%. Optimize air flows, furnace performance, and establish operating procedures to assure the production of the desired end product.

pellet lift & cooler emissions low!

3. Estimate and/or measure emissions from each source operation: pellet lift and cooler emissions should be low and not require control. If the hammermill collector discharge appears dirty, consider controlling it with a bag house. Determine whether visual opacity problems exist in the primary cyclone effluent. It will probably require some form of source testing to determine if the primary cyclone emissions exceed the standards.

4. Analyze potential production constraints: analyze the effects and economic feasibility of reducing production during periods of low hay quality. Operating the plant at a slightly reduced rate during periods of low hay quality may be all that is necessary in addition to step two to keep the plant operating in compliance. Compare the resultant value of lost production with estimated

cost of installing and operating add-on control devices.

5. Select suitable control systems: as required, select suitable add-on control systems considering performance and cost trade offs of alternative systems. Key points here are the manufacturers' willingness to guarantee results in the operating constraints associated with each control system. One should not design or buy control equipment without having a good measurement of the gas flow it is supposed to handle.

The most cost-effective scheme for the control of particulate emissions will most likely vary from plant to plant depending upon existing plant equipment and available space.

SECTION III

INTRODUCTION

Dehydrated alfalfa is the aerial portion of the alfalfa which has been artificially dried under controlled conditions to insure maximum integrity of nutrients. Chopped alfalfa is brought in from the field and transferred to an automatic feeder that meters it directly into the combustion gases in the drier. The drier may be either a triple-pass or single-pass rotating drum in which lifting flights continuously raise the alfalfa and drop it into the gas stream which moves it rapidly through the drier in a concurrent manner. During dehydration, most of the moisture of the alfalfa is removed in the constant rate drying phase where moisture diffuses to the surface of the particles as fast as it is evaporated from the surface. After remaining in the drum for about two to ten minutes, the alfalfa (which is now quite dry), is separated from the moisture laden gases by means of a cyclone or other separator. This is called the primary cyclone or primary collector. The alfalfa (dry chop) is then transferred either directly or through another cyclone for cooling before going to a hammermill for grinding. The ground material is usually pelleted, cooled and placed in inert gas storage facilities.

Dryer generated emissions are discharged into the atmosphere from the primary cyclone collectors which separate the dried alfalfa chops from the dryer effluent. Hammermill and pellet cooler generated emissions are discharged into the atmosphere from the hammermill and pellet cooler collectors. The need to control dryer emissions has been established from test results obtained from a 1971 American Dehydrators Association study(1) which showed that emissions from the drying operation comprise more than 75% of total particulate emissions from a dehydrating plant. Whereas the emissions from the hammermill and pellet cooler collectors are generated by mechanical action and fall in the particle size range of 1 to 100 microns, the emissions from the primary collector are formed by mechanical action and volatilization of organic matter from the alfalfa on contact with the hot dryer gases.

The rapid absorption of heat by evaporation keeps the plant substance cool enough (i.e. wet bulb temperature) to avoid burning as long as there is moisture in the material. Were it possible to heat all of the incoming wet material with perfect uniformity, the wet solids would never reach a temperature exceeding the dryer outlet temperature. However, the incoming stock is not uniform in cross sectional area or in moisture content. For this reason, some of the incoming alfalfa (leaves or other small cross sectional pieces) will dry completely while still in contact with gas from the burner which has not been cooled by contact with a large amount of water material. These parts will reach temperatures high enough to evolve organic vapors or "smoke". Organic emissions (smoke) occur in all types of processes where organic material is heated above 200° or 300° F. This fume-forming process involves condensation of the vaporized organic material as the temperature drops below the "dew point" temperature for the material in question. The condensation produces very tiny particles which may be as small as 0.01 microns in diameter at the point of formation. These tiny fume particles grow very rapidly by electrostatic agglomeration.

This mechanism becomes less effective as the particles become larger and also as they become fewer in number. The result is that the particles tend to stabilize rather quickly at sizes in the 0.2 to 0.5 micron range depending upon initial concentration, residence time, and other factors.

typical controls evaluated

In the summer of 1972, the American Dehydrators Association initiated a program to assess the effectiveness of techniques for the control of mechanically generated and fume formed particulate emissions from alfalfa dryers. This involved field measurements of seven control devices or systems - two pilot-scale and three full-scale wet collectors (scrubbers) and two full-scale control systems which recycle effluent from the primary cyclone. These devices/systems were suggested by the respective equipment manufacturers to provide effective control of dryer generated particulates in the primary cyclone effluent. The characteristics of the particulates in carrier gases discharged from primary cyclones had been determined in the ADA's 1971 study.

During the summer of 1973, further tests were conducted on the two recycle systems and the full scale wet scrubbers to verify the effectiveness of these control measures as indicated in the 1972 tests. New Heil and Thompson recycle system installations at Dundee and St. Marys, Kansas, respectively, were tested in order to take advantage of improvements which had been made over the Grand Island and Topeka installations. The full-scale Koch wet scrubber was moved from Rozel to Lawrence, Kansas where several plant modifications had been made including the installation of a fan and electric motor large enough to handle the extra pressure drop produced by using the wet scrubber.

Three additional plants were tested in 1973 to measure the effectiveness of plant improvements, simplified recycle approaches, and general efforts to balance air flows, and maintain good operating procedures.

The plant at Lawrence, Kansas was also tested with the effluent gases by-passing the wet scrubber to determine the degree to which emission levels can be controlled through plant modifications and operating procedures.

It was hoped that the 1973 tests could be made under conditions of low quality hay and high production rates in order to document the effective limits of the various control methods under study. However, this was not always possible because of the difficulty in scheduling the tests to coincide with the times when these conditions prevailed or because of the plant operator's preference for having the testing done under average conditions rather than under upset conditions.

Table 1 presents information on the particulate emission control equipment that was tested and on the plants where the equipment was installed. The selection of plants and equipment to be tested and arrangements for installation of equipment and preparation for testing were worked out by the Production Committee of the American Dehydrators Association, in cooperation with pollution control and dehydration equipment manufacturers.

The performance testing was conducted by Midwest Research Institute personnel who also provided specifications for preparation of the sampling stations including the location of sampling ports and work platforms.

Process conditions were monitored either by a process engineer from MRI or by someone to whom that responsibility was delegated. Control equipment operation conditions, i.e., gas-phase pressure drop and water usage, were measured or estimated by representatives of the equipment manufacturers.

Following the conclusion of the 1972 field testing, the equipment manufacturers were asked to submit performance and cost data for a "model" control problem. These data were analyzed to determine the relative cost of purchasing, installing and operating each control device system and the cost for water treatment, if applicable. Midwest Research Institute personnel developed the model control problem and prepared the cost analysis.

TABLE 1

TESTING PROGRAM - EQUIPMENT AND PLANTS

Control Equipment			Dehydrating Plant		
Manufacturer	Device/System	Scale	Location	Source Operation[a]	Evap. Capacity of Dryer (lb/hr)
Fisher-Klosterman (FK)	Wet Scrubber	Pilot	Neodesha, Kansas	D+HM	20,000
Applications Corporation (APPCOR)	Wet Scrubber	Pilot	Neodesha, Kansas	D+HM	20,000
Koch Engineering Co.	Wet Scrubber	Full	Oxford, Kansas	D	12,000 (1972)
	Wet Scrubber	Full	" "	D	19,000 (1973)
	Wet Scrubber	Full	Rozel, Kansas	D	18,000
	Wet Scrubber	Full	Lawrence, Kansas	D+HM	12,000
Air Conditioning Corp. (ACC)	Wet Scrubber	Full	Lexington, Nebraska	D	30,000
Thompson Dehydrating Co.	Recycle System	Full	Topeka, Kansas	D+HM+PM	30,000
	Recycle System	Full	St. Marys, Kansas	D+HM+PM	27,000
Heil Co.	Recycle System	Full	Grand Island, Nebr.	D	34,000
	Recycle System	Full	Dundee, Kansas	D	34,000
Plant Modifications		Full	Abilene, Kansas	D+HM+PM	22,000
" "		Full	Neodesha, Kansas	D+HM	20,000
" "		Full	Berthoud, Colorado	D+HM	20,000

a/ Operations which contribute particulate matter to the primary cyclone effluent, i.e. drying (D), hammermilling (HM), and pellet mill system (PM).

SECTION IV

OBJECTIVES

The primary objective of this project was to determine the feasibility of controlling the effluent from the primary collectors of alfalfa dehydrating plants by recycling the emissions or by using wet scrubbers. This includes several related specific objectives. These were:

A. To evaluate effectiveness of recycling a portion of the effluent gases back to the furnace inlet in: 1) reducing the amount of particulate emissions to atmosphere; 2) increasing the thermal efficiency of the overall system; 3) improving nutrient quality of the dried product.

B. To determine the effectiveness of a system for agglomerating, separating and recycling particulate in the effluent gases back to the primary cyclone and inlet to the furnace.

C. To measure the efficiency, horsepower requirements, performance characteristics and associated problems relative to the use of wet scrubbers for the removal of particulate emissions from the effluent gases of alfalfa dehydrating plants.

D. To test medium energy wet scrubbers with different impingement mechanisms to obtain sufficient data for evaluating the capability of wet scrubbers to control emissions from alfalfa plants and to determine if any particular type of wet scrubber is more effective in the control of effluent from alfalfa dehydrating plants.

E. To gather data relative to the effect of product conditions (moisture and protein levels) and process parameters (production rate, gas temperatures, water spray in feeder) on particulate emissions from alfalfa dehydrating plants.

F. To determine the degree of particulate emission control which can be realized from plant modifications, air flow balance and operating procedures.

SECTION V

DESCRIPTION OF CONTROL EQUIPMENT

This section presents a summary of the principles of operation and a description of the plant interfacing for each of the ten control systems/devices which were tested in 1972 and 1973. In each case, a flow diagram is given which shows duct sizes, fan locations, approximate gas flow rates, and the locations of sampling stations.

It should be noted that the control equipment operating principles given below are based on wording, pictorial representations, and diagrams provided by the respective equipment manufacturers; the asserted particulate collection mechanisms are not necessarily substantiated or refuted by the test data presented in Section VII of this report.

Fisher-Klosterman Wet Collector (Pilot Scale)

Figure 1 presents a pictorial representation of the Fisher-Klosterman wet collector, with annotations describing the principles of operation.

A pilot-scale F/K unit designed to handle about 700 acfm was installed at Western Alfalfa Corporation's plant at Neodesha, Kansas. As shown in Figure 2, a fraction of the skimmer recycle from the primary cyclone collector to the furnace, was ducted to the F/K unit. Following the initial testing, the position of the auxiliary fan was changed so that the F/K unit operated under negative rather than positive pressure. Also, a heater was added to raise the temperature of the scrubber effluent gases above the dew point to facilitate testing at the outlet.

The F/K unit was supplied with tap water at about 4 gal./min. The measured gas pressure drop was about 11 in. of water.

APPCOR Wet Collector (Pilot Scale)

Figure 3 presents a schematic diagram of the APPCOR wet collector. The gas to be scrubbed enters from the top of the unit and flows downward past a sawtooth overflow weir. The weir is used to introduce make-up and/or recirculated water into the scrubber.

A scrubbing action is created by the gas shearing the water flowing from the weir. The gas is then accelerated through an adjustable venturi nozzle. By closing the nozzle, higher collection efficiency can be expected at the expense of an increased pressure drop. At the nozzle tip, the dust-laden gas is impacted into the sump, providing a second scrubbing action. The gas then takes a 135-degree turn, and at this point a large quantity of finely divided water particles are sprayed up and throughout the interior of the scrubber. The spray, which is caused by the accelerated

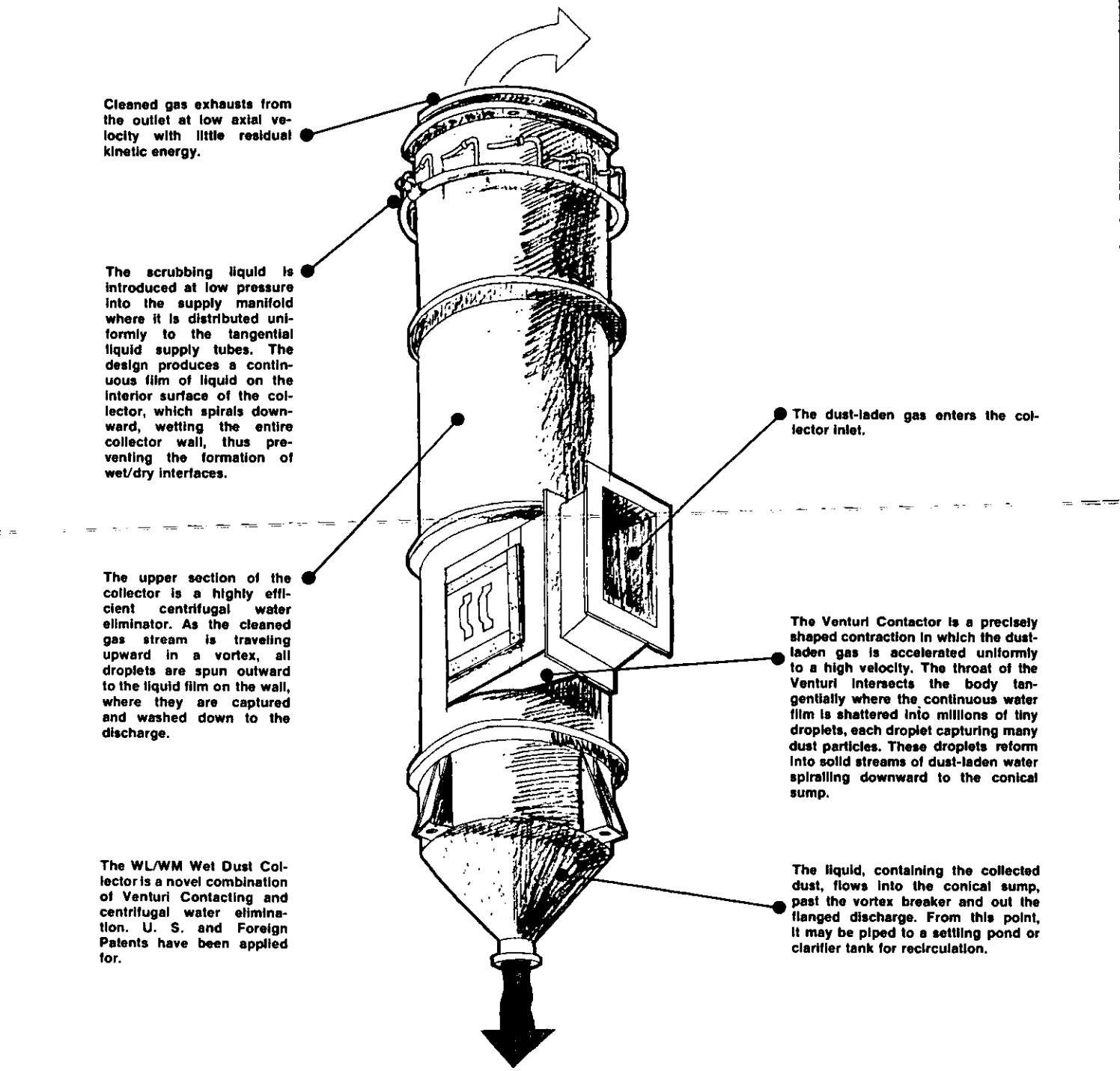

Figure 1 - Fisher-Klosterman Wet Collector (Courtesy of Fisher-Klosterman, Inc.)

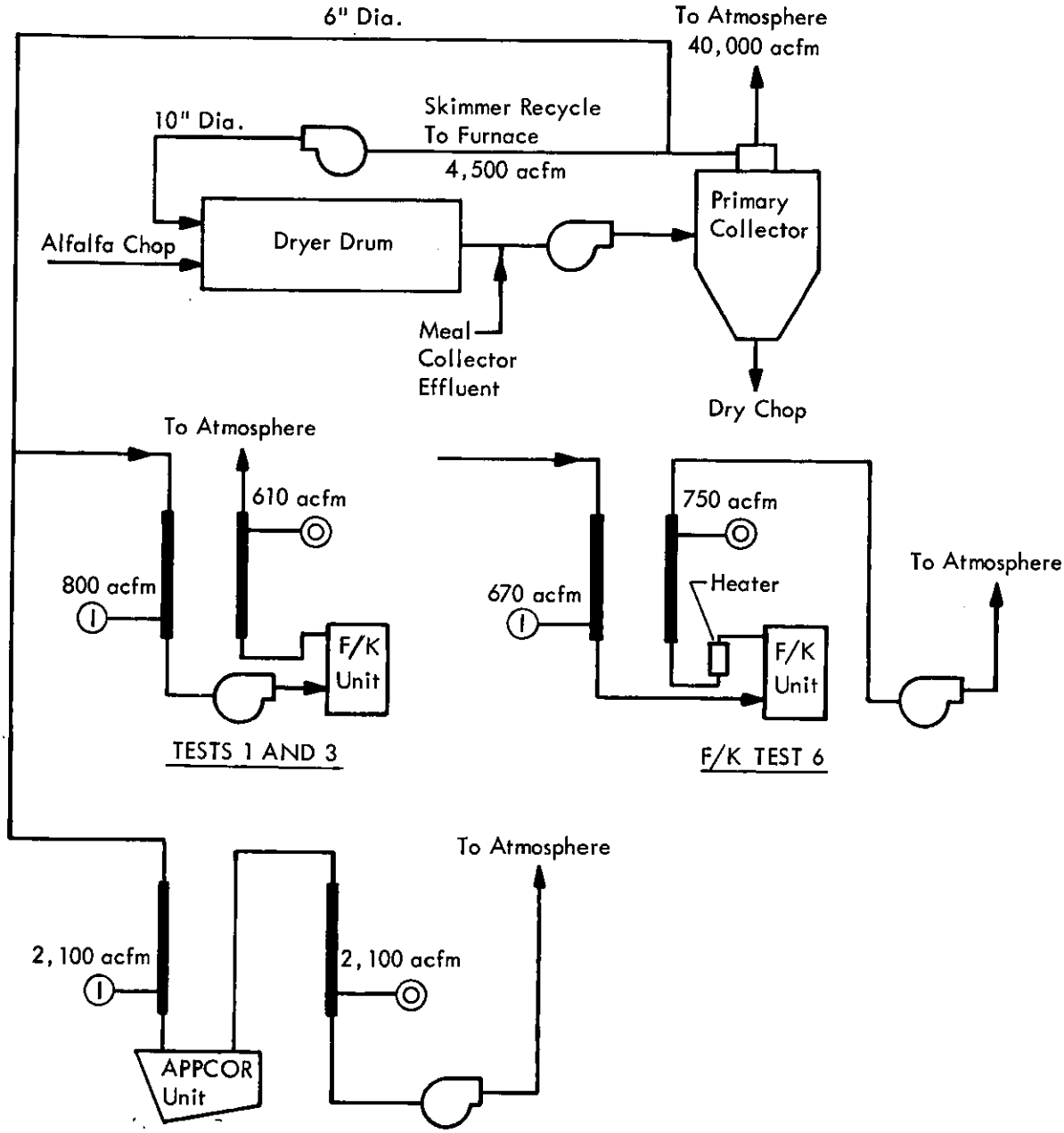

Figure 2 - Neodesha Plant Interfacing with Pilot-Scale Wet Scrubbers

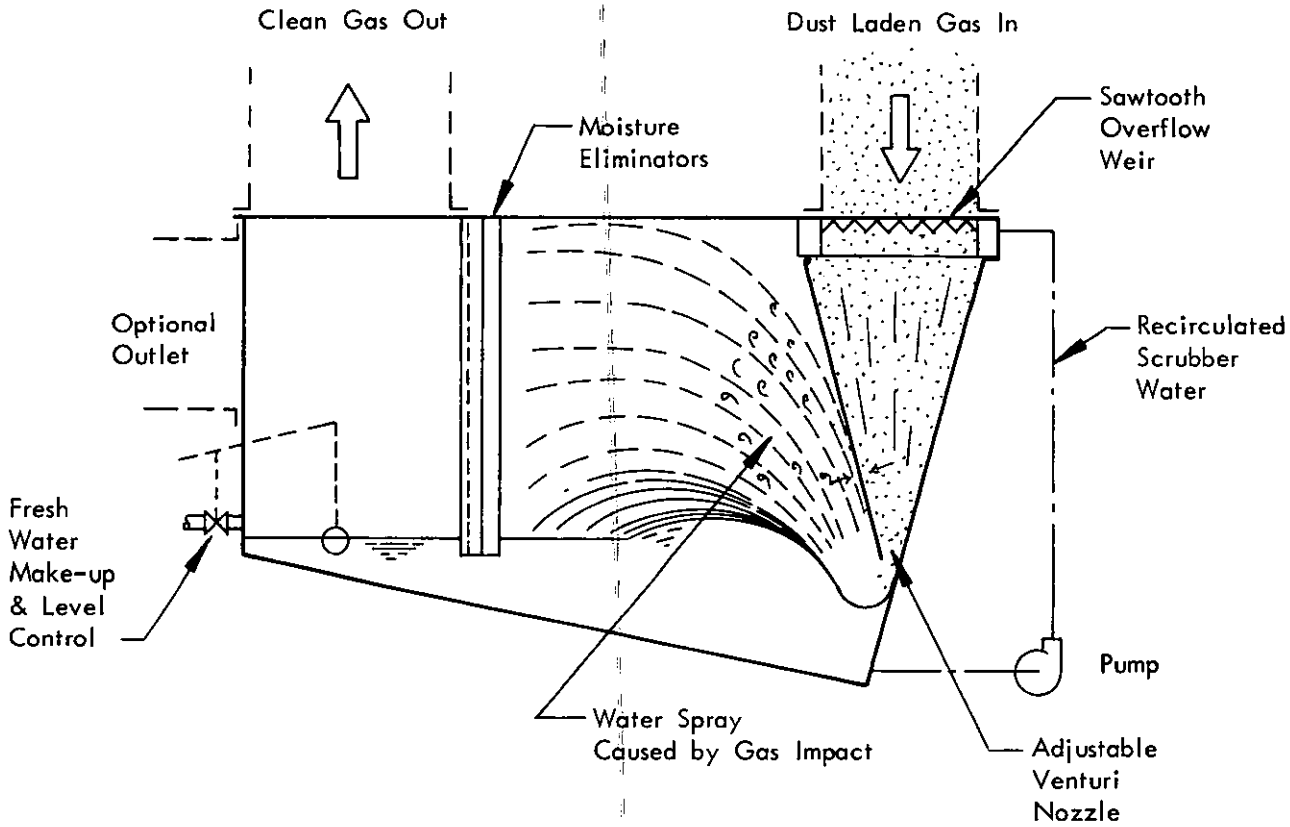

Figure 3 - APPCOR Wet Collector (Courtesy of Applications Corporation)

gas shearing liquid from the sump as the gas changes direction, provides the third scrubbing action. The gas is then passed through a series of vertical chevron moisture droplet eliminators and out the back or top of the scrubber.

A pilot-scale APPCOR unit was installed at Western Alfalfa Corporation's plant in Neodesha, Kansas. As shown in Figure 2, a portion of the skimmer recycle from the primary collector to the furnace, was ducted to the scrubber unit.

The APPCOR unit was operated with recycled water which was supplied from a water clarification system. The water recirculation rate was estimated by the manufacturer to be 6 gal/min. The measured gas pressure drop was about 7 in. of water.

Koch Wet Collectors

Figure 4 presents a pictorial representation of a Koch wet collector containing three scrubber trays. Each tray contains numerous venturi openings, and each opening is surmounted by a spider cage holding a floating cap. In addition, each tray is equipped with one or more downcomers and weir flow baffles that control the scrubbing liquid as it flows across the tray and then to the tray below. The particulate-laden gas enters the bottom inlet and flows upward through the caps. The liquid flows across the deck and is kept in constant froth by the gas which exits each cap. A head of frothy liquid is maintained by the weir, providing intimate gas/liquid contact. The tray divides the liquid flow into fine droplets that capture particulates. By using multiple trays, division and redivision of the scrubbing liquid occurs with high gas and liquid residence time on each tray. Before the gas leaves the scrubbing chamber, it passes through a mist eliminator.

A single Koch tray and a mist eliminator pad were installed in a silo (10 ft diameter x 60 ft high) at Oxford Dehydrating Company's plant in Oxford, Kansas. Effluent from the primary collector was ducted to the base of the silo as shown in Figure 5. Recirculated water was supplied to the tray from a settling basin at the bottom of the silo. The manufacturer estimated the recirculation rate to be 125 gal/min. and the fresh water make-up rate to be 2 gal/min. The measured gas pressure drop was about 3 in. of water.

Two Koch trays and a mist eliminator were installed in a steel shell at a plant in Rozel, Kansas, owned by Bert and Wetta Sales, Inc. The connecting ductwork is shown in Figure 5. Recirculated water was supplied to the trays from a settling basin at the bottom of the collector. The manufacturer estimated the recirculation rate to be 175 gal/min. and the fresh water make-up rate to be 2.5 gal/min. According to the manufacturer, the gas pressure drop was 6 in. of water.

The scrubber unit was removed from Rozel and installed at the Western Alfalfa Corporation plant in Lawrence, Kansas for the 1973 tests. One of the Koch trays was removed and the mesh type mist eliminator was replaced with a chevron type. Pressure drop across the unit was 3-3½ inches of water column.

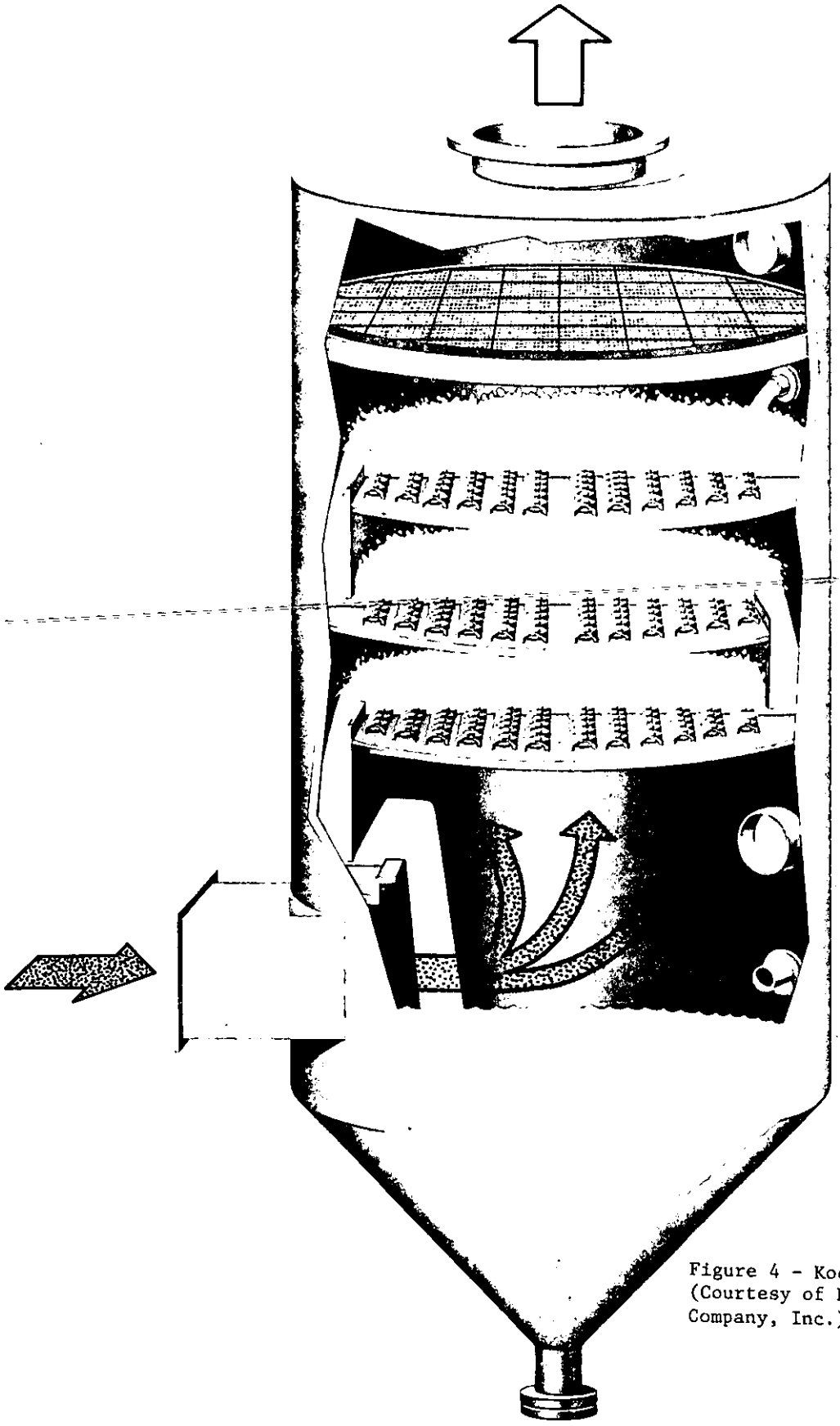

Figure 4 - Koch Wet Collector (Courtesy of Koch Engineering Company, Inc.)

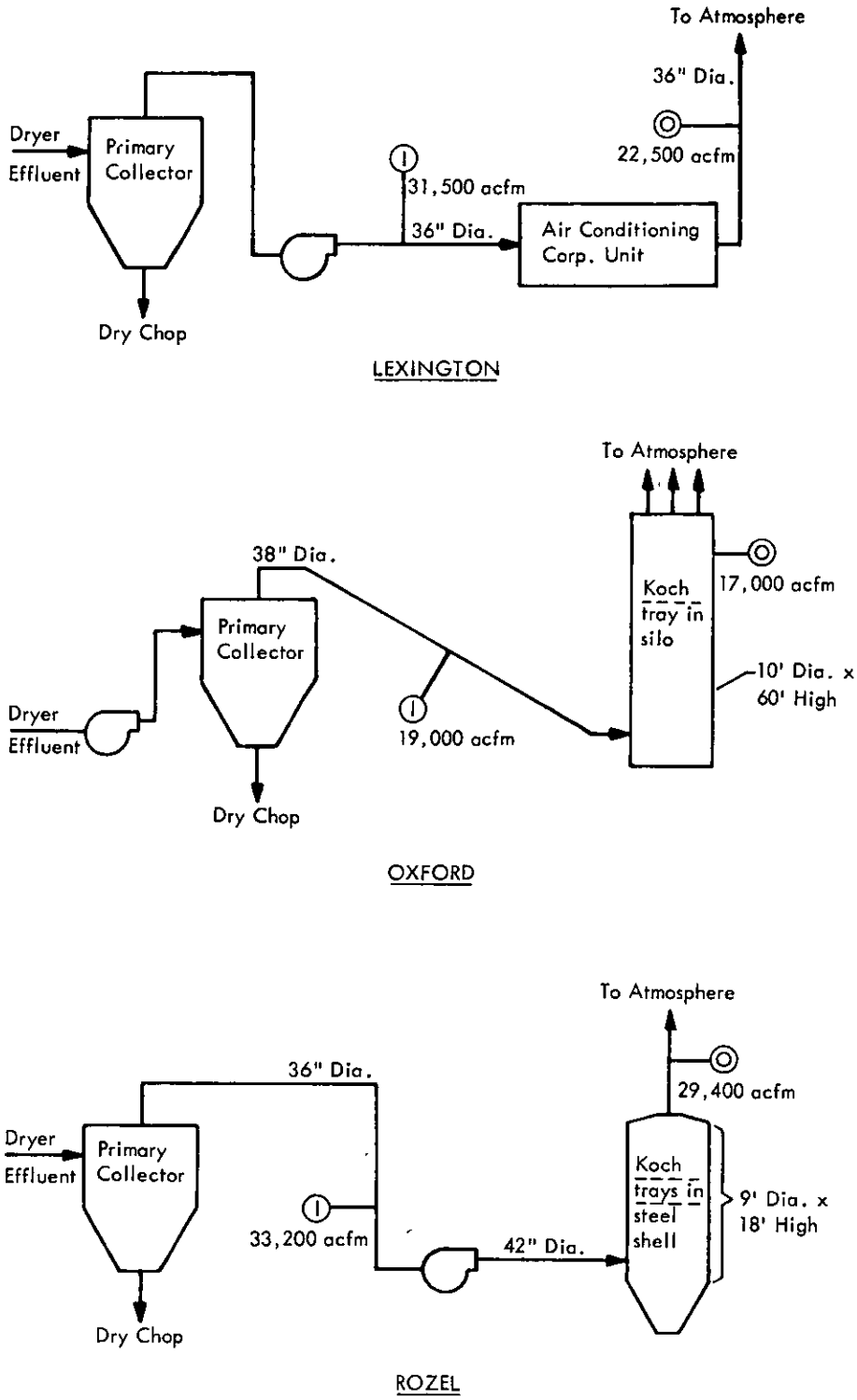

Figure 5 - Plant Interfacing for Full-Scale Wet Collectors

Air Conditioning Corporation Wet Collector

The Air Conditioning Corporation wet scrubber consists of a long rectangular duct through which gases flow horizontally. The duct contains several banks of spray nozzles and the scrubbing liquid is atomized by pumping the liquid under pressure through the nozzles. At the downstream end of the scrubber is a mist eliminator.

An ACC scrubber unit which was approximately 4 ft x 4 ft x 10 ft was installed at a plant in Lexington, Nebraska, owned by Dawson County Feed Products, Inc. The connecting ductwork is shown in Figure 5 . Water was supplied from a fire hydrant to the unit at a rate of approximately 405 gal/min based on the manufacturer's nozzle performance calculations. According to the manufacturer, the gas pressure drop was 3 in. of water.

Thompson Recycle System

Figure 6 presents a pictorial representation of the Thompson recycle system. Effluent from the primary collector is passed through two venturi sections separated by a static regain chamber. The purpose of the venturi sections is to promote agglomeration of fine particles. Water spray is provided in the first venturi section to cool the gases and to increase agglomeration. The gases in the static regain chamber are cooled to saturation temperature by mixing gases with ambient air (the damper on the air intake line was closed during testing; however, leakage into the static regain chamber was observed). Gases leaving the second venturi pass through the fan and into a 360-degree rectangular helicoid elbow. The largest particles are skimmed from the effluent and returned to the primary collector; intermediate sized particles are returned to the front end of the dryer drum (the return line to the drum is not shown in Figure 6); and the smallest particles which are skimmed, are returned to the dryer furnace.

In 1972, the recycle system was tested at the Thompson Dehydrating Company's plant in Topeka, Kansas. At that plant, effluents from the hammermill and pellet mill dust separators were returned to the primary collector; thus, the plant had only one emission point. A schematic diagram of the Topeka plant, showing the location of sampling stations, is presented in Figure 7 .

The venturi spray used about 2 gal/min of water, according to the manufacturer's estimate. The usage of water spray in the feeder was measured at about 6 gal/min. According to the manufacturer, the total gas pressure drop across the Thompson recycle system was 9 in. of water.

The 1973 tests were conducted on the Thompson recycle system at the Thompson St. Marys, Kansas plant. This system is essentially the same as the one at Topeka. However, no water spray was used in the Venturi or at the feeders during the St. Marys tests.

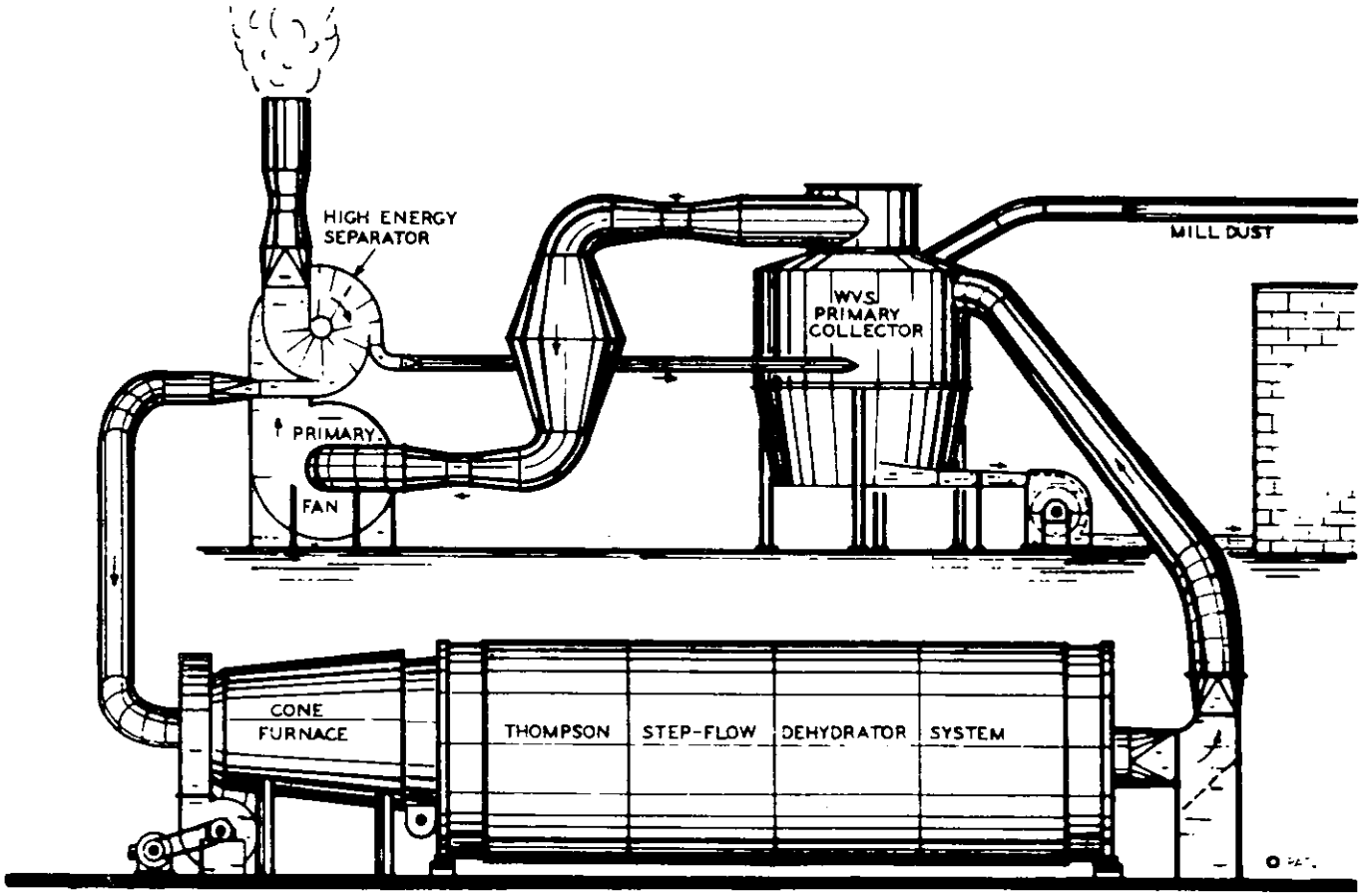

Figure 6 - Thompson Recycle System (Courtesy of Thompson Dehydrating Company)

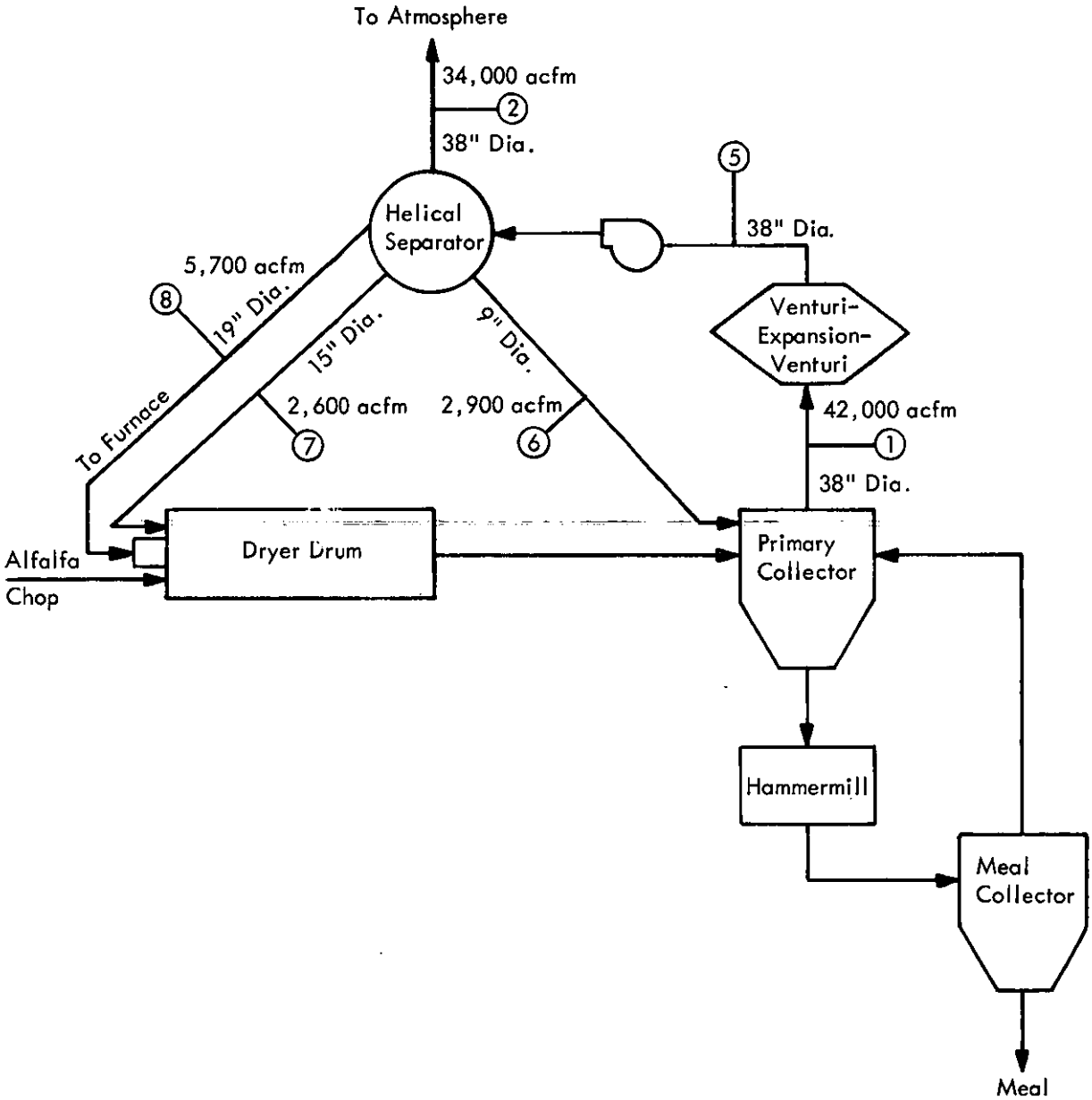

Figure 7 - Topeka Plant Interfacing With Thompson Recycle System

Heil Recycle System

The Heil recycle system skims off a large portion (about 35%) of the effluent from the primary collector and returns it to the dryer furnace for incineration of the particulate matter. The recycle duct is insulated to prevent heat losses and cooling of the effluent below the dew point. No water is used in this system.

In 1972, the Heil recycle system was tested at a plant in Grand Island, Nebraska, owned by Morrison and Quirk, Inc. A schematic diagram of the Grand Island plant, showing the location of sampling points, is presented in Figure 8. An elbow and horizontal extension duct had been installed on the outlet of the primary collector to provide for accurate measurement of the particulate emissions. The extension duct was reduced in diameter, from 74 in. to 60 in., to increase the velocity within the duct so that accurate flow measurements could be made.

The Heil recycle system at Dundee, Kansas which was tested in 1973 is basically the same as the system at Grand Island. The plant flow diagram is shown in Figure 9.

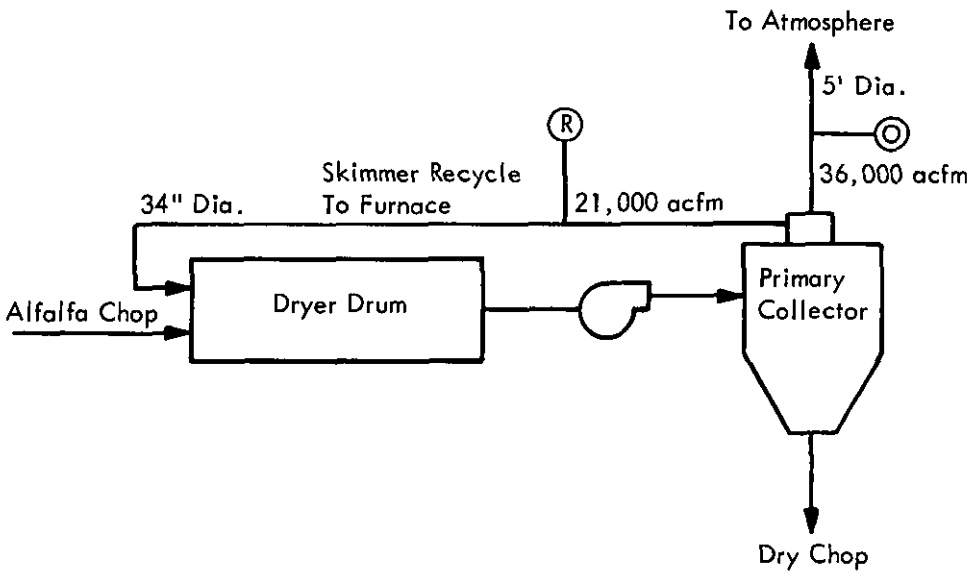

Figure 8 - Grand Island Plant Interfacing With Heil Recycle System

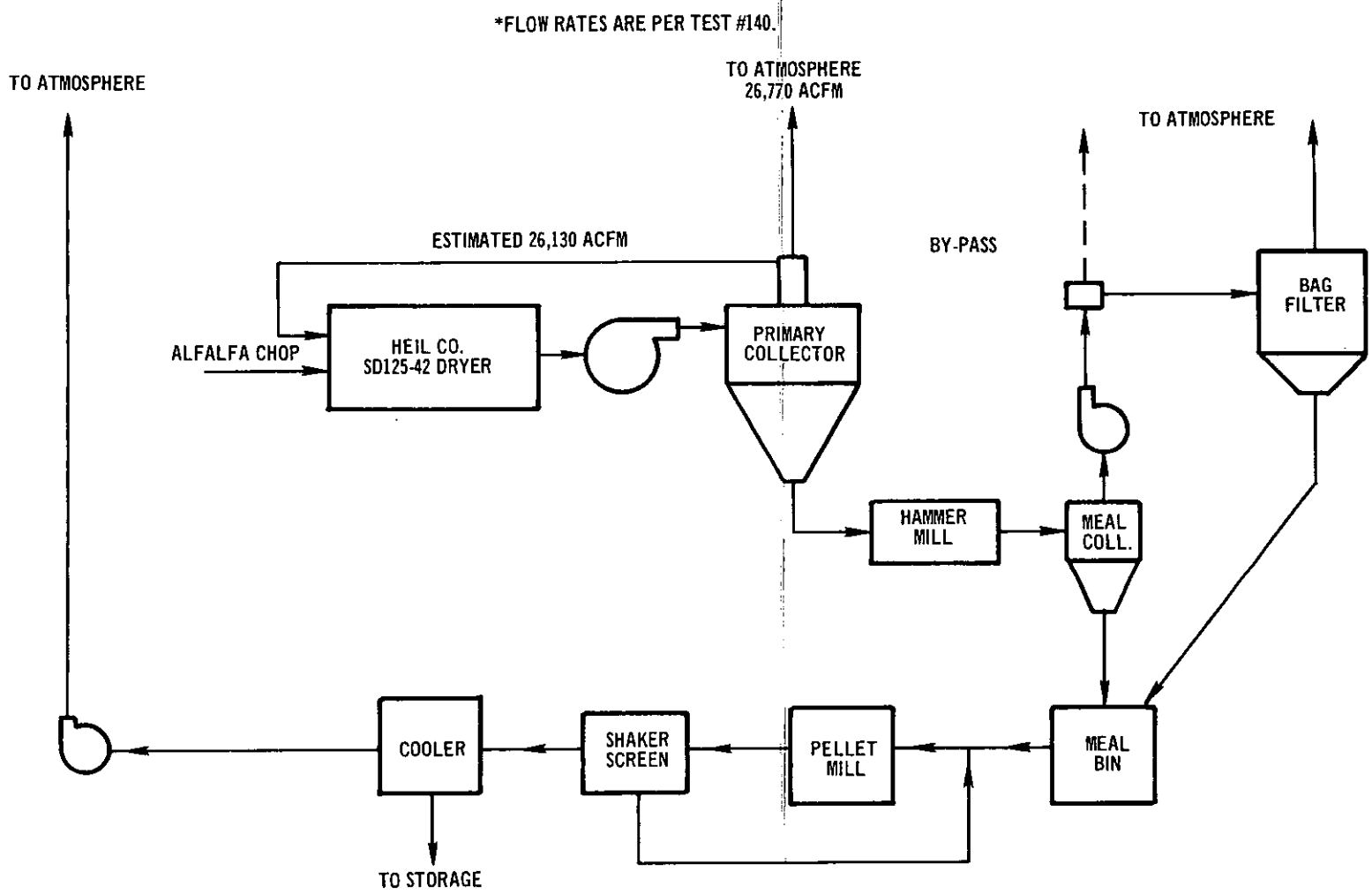

Figure 9. Dundee plant interfacing with Heil Recycle System.

Abilene Plant Modifications

furnace replacement

Several significant modifications were made on the alfalfa dehydrating plant at Abilene, Kansas prior to the 1973 production season. A new furnace and short flame burner (designed to burn the gas in a three foot flame) were installed to reduce the emissionswhich result from flame impingement on the green chops. The primary cyclone system was converted from positive to negative pressure air flow and was exhausted into a large concrete (20' X 40') silo with sealed roof and 36" diameter stack with necessary scaffolding and port holes for source testing.

The hammermill and pellet mill systems were also made negative and exhausted into the silo at the same point the primary cyclone effluent entered the silo. A recycle line was installed from the drum fan to the furnace with the capability of returning up to 30% of the gases back to the furnace. The Abilene plant interfacing is shown in Figure 10.

Lawrence Plant Modifications

This plant has two 8' X 24' - 3 pass alfalfa dehydrating drums. Prior to modifications, the plant was of rather standard design with positive primary collectors, secondary cooling collectors, meal collectors, pellet lift collectors and pellet cooling collectors.

The modifications consisted of a complete re-design and re-building of air flow systems from the drums and converting from positive systems to one main negative system.

The two drums were ducted to a single negative primary cyclone. The dehydrated chops drop from the cyclone into a pull-through hammermill via a large rotary airlock. The hot gasses are drawn from the top of the cyclone to the main mill fan which, in turn, can exhaust directly to atmosphere or by means of a valve to the Koch single tray scrubber.

The hammermill system employs a closed loop which returns all but a small portion (20-30%) of the air back to the hammermill. A small air balancing line, to prevent heat build up, is located between the return loop to the hammermill and the suction side of the primary mill fan. Figure 11 presents the plant flow diagram.

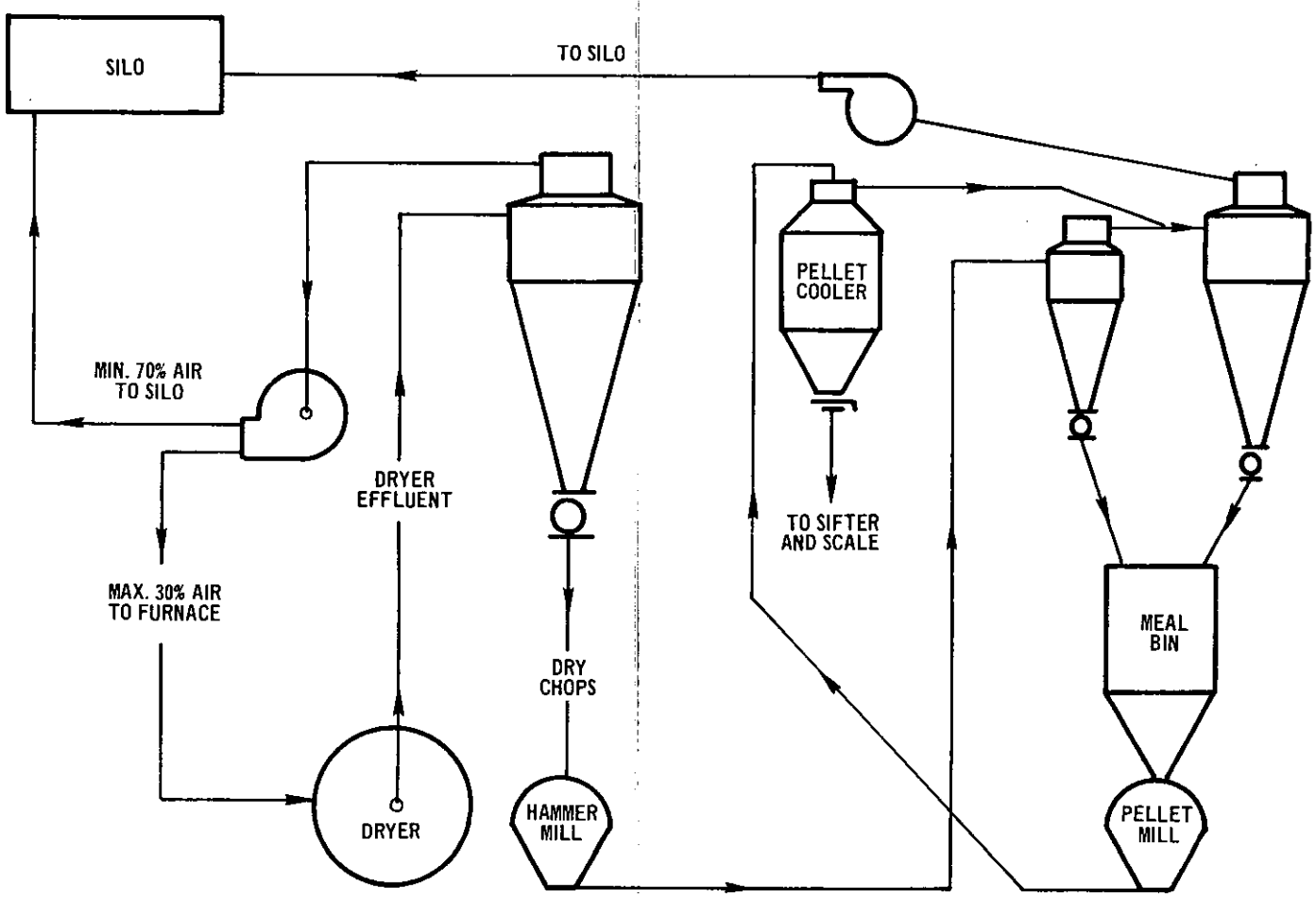

Figure 10. Abilene plant interfacing.

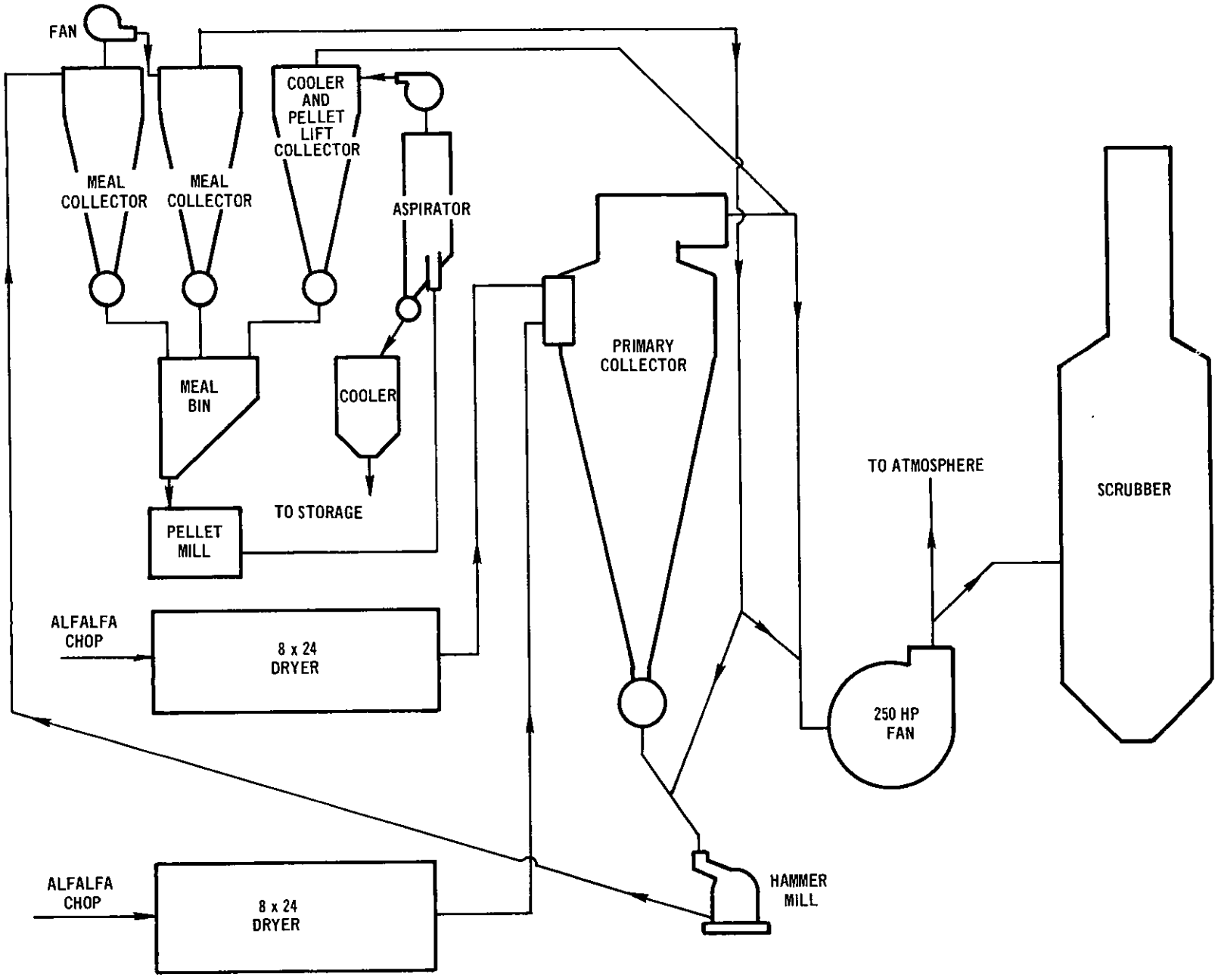

Figure 11. Lawrence plant interfacing.

Neodesha and Berthoud Plant Modifications

The Neodesha, Kansas and Berthoud, Colorado plants have similar flow diagrams shown in Figure 12. Both have positive pressure primary cyclone collectors and modified hammermill meal handling systems. Careful attention was given to balancing air flows and sizing of collectors.

A positive displacement skimmer was installed at both plants between the top of the primary collector and the intake to the drum furnace handling about 6000 CFM on a continuous basis. At Berthoud, the skimmer entry device to the furnace was modified to give better distribution of the recycled gases into the furnace. The furnace was also lengthened an additional three feet in an effort to reduce flame impingement on the green chops entering the drum.

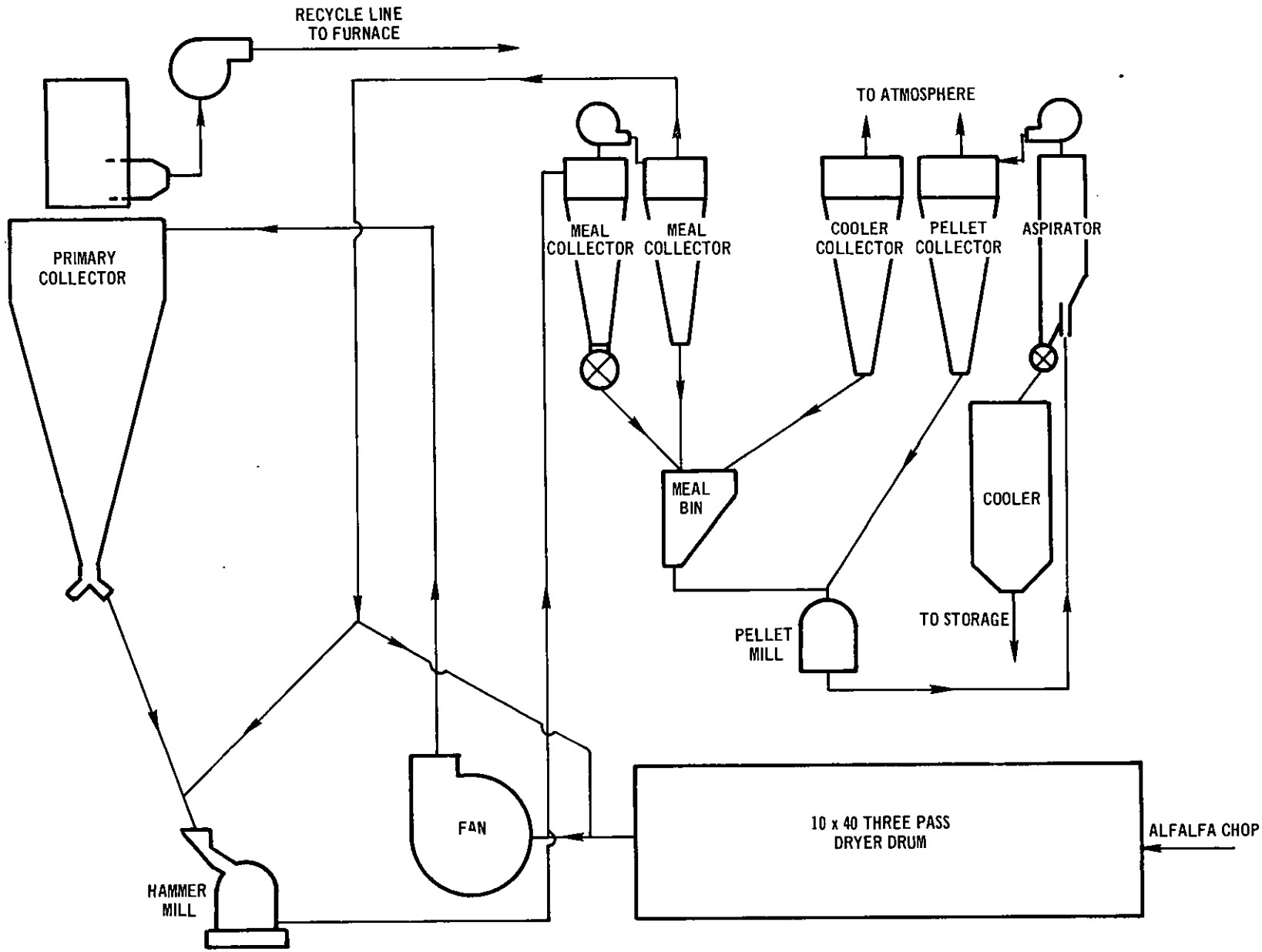

Figure 12. Neodesha and Berthoud plants interfacing.

SECTION VI

MEASUREMENT TECHNIQUES, EQUIPMENT AND PROCEDURES

Two types of source tests were performed to determine, respectively; the mass flow rate of particulates, and the particle size distribution. The mass rate test consisted of the measurement of dust loading and the carrier gas flow rate, temperature and composition (by moisture and Orsat analysis).

Integrated particulate samples, representative of the entire duct cross section, were collected by sampling for equal intervals of time over a network of properly distributed points. For each test, the duration of sampling was sufficient so that short term fluctuations in particulate flow were averaged.

For the particulate sizing tests, an Andersen in-stack impactor was mounted on the end of the sampling probe in place of the normal tip. The Andersen impactor measures size distribution *in situ*, thereby eliminating particle agglomeration problems encountered when particulate samples must be transferred before sizing analysis.

Table 2 indicates the process parameters that were measured during testing and the frequencies and methods of measurement. These parameters have been classified into three groups: raw materials, product (pellets), and process operating conditions.

In most cases, samples of alfalfa, i.e., green chops, dry chops, meal and pellets, were sent to testing laboratories for moisture analysis. The laboratory results were considered more accurate than results of analysis in the field with a portable moisture balance. Therefore, field results are given in this report only for the cases for which laboratory results were not obtained.

Isokinetic sampling was used to collect particulate samples which validly represented average conditions (particulate concentration and particle size distribution) over the entire cross section of the flow stream. The sampling train is described in the Federal Register(2) and in a recent paper by Cowherd and Vandegrift(3). An s-shaped pitot tube is attached to the probe so that velocity of the flow stream near the probe tip may be monitored while the sample is being withdrawn. In this way, rapid adjustment of the sampling rate can be made to attain the isokinetic condition.

TABLE 2

PROCESS PARAMETERS MONITORED DURING TESTING

Parameter	Units	Measurement Frequency	Measurement Method
I. Raw Materials			
A. Hay (green chops)			
1. Moisture Content	percent by weight	composite of 3 samples/test	Cenco balance/Lab determination
2. Feed Rate	ton/hr		Truck weights
B. Fuel Consumption Rate	scfm	beginning and end of test	Meter reading
II. Product (pellets)			
A. Protein Content	percent by weight	composite of 2 samples/test	Lab determination
B. Moisture Content	percent by weight	composite of 2 samples/test	Lab determination
C. Production Rate	ton/hr	3/hr	Scale dumps
III. Operating Conditions - Internal			
A. Dryer Conditions			
1. Outlet Temperature	°F	3/hr	Mercurial thermometer
2. Excess Air	percent	continuously integrated sample	Orsat analysis
B. Moisture in Hammermill Feed (dry chops)	percent by weight	composite of 3 samples/test	Cenco balance/Lab determination
C. Recycle Flow Rates	acfm		Duct velocity profile

The average velocity was determined by measuring the flow over the proper network of sampling points within the cross section of the duct. The average temperature and moisture content of the carrier gases were also measured with the standard particulate sampling train. The dry-gas composition of the carrier gases was measured by collecting an integrated gas sample in a tedlar bag and by analyzing it with an Orsat apparatus.

Several difficulties inherent in testing the kind of effluent produced by alfalfa dryers should be pointed out. Foremost among these is the problem of measuring gas flows and grain loadings for very high moisture content streams. The measurement of velocities using the pitot-tube is not particularly difficult, but the measurement of moisture content by condensation and collection of the liquid water seems to cause a fair amount of difficulty. In several of the tests, the moisture content is reported as considerably above the saturation level for the sample temperature. This suggests that some of the tests may have been run on a stream that was cooled below the dew point and had condensation taking place in the ductwork. Also, there are some difficulties associated with measuring particle size when the gas stream is extremely wet, and there is a possibility of condensation occurring in the sampler. The problems are associated again with potential volume change due to water condensation, and with the possibility of collected particles which have been wetted by water droplets or agglomerated by water condensation.

The inherent inaccuracies of the methods used in this testing program to measure gas flow rate, particulate concentration, and particulate mass flow rate (the product of the two) have been thoroughly analyzed in a recent paper by Shigehara et al.(4). The cumulative error in the measurement of flow rate is ±5% or less; in the measurement of emission rate, the cumulative error is ±10% or less. However, there is the possibility of a 20% error in the measurement of particulate rate in the presence of flow swirl; this is because an S-shaped pitot tube may read as much as 15% higher if sufficiently inclined relative to the flow direction(5). Errors in the measurements of process parameters are estimated to be ±10% or less.

Procedures which were followed in the processing and analysis of the collected particulate matter are essentially the same as those outlined in the Federal Register(2). At the end of each source test, the particulate sample was transferred from the sampling train to appropriate containers and returned to the Institute for precision laboratory analysis.

For the particulate sizing tests, an eight-stage Andersen impactor was used in place of the normal probe tip on the isokinetic sampling train. The impactor separated the particulates into eight size classes with the greatest resolution in the 0.5 to 15 μ size range. The sampling time for a sizing test was determined by the dust loading in the effluent gases.

Calculation of the results of the particulate emission tests was done by electronic computer. Corrections were made for deviations from isokinetic sampling; such deviations were generally less than 10% and corresponding corrections less than 5%.

The equations for process weight rate (PWR) and evaporation rate (ER) are as follows:

$$PWR(lb/hr) = PR \times 2000 \left(\frac{100-M_p}{100-M_g}\right) ;$$

$$ER(lb/hr) = PWR \left(\frac{M_g - M_d}{100-M_d}\right) + PR \times 2000 \left(\frac{100-M_p}{100-M_g}\right)\left(\frac{M_g - M_d}{100-M_d}\right) ;$$

Where PR = pellet production rate (ton/hr),
M_g = percent moisture in green chops (dryer input),
M_d = percent moisture in dry chops (dryer output), and
M_p = percent moisture in pellets.

For the 1971 and 1972 tests on the positive pressure cyclone collectors, a 90° elbow and long horizontal extension duct were installed on the cyclone outlet for the purpose of eliminating the normal swirl of gases being discharged from the collectors. Testing was conducted eight duct diameters downstream from the elbow, but there was still occasional swirl and the long extension duct created some slight problems of back pressure and settling of particulate matter. The cost of fabricating and installing the long extension ducts was also very expensive, running up to $2,000.

To overcome the difficulties associated with the extension duct, two types of straightening vane arrangements were tried in 1973. Both proved satisfactory, but the one shown in Figure 13 was slightly preferable. Vertical extension ducts were used but, with the swirl removed by the straightening vanes, it was possible to use much shorter ducts and still be consistent with the Federal Register(2) by sampling at the prescribed number of traverse points.

The sampling platforms and ladders were arranged basically as shown in Figures 14 and 15. In designing straightening vanes, each cubicle should be 5-15% of the stack area. Smaller cubicles have less swirl, but more back pressure and vice versa. The cubicle length should be three times the width of the cubicle. Thus, smaller cubicles will lower the height of the straightening vane section.

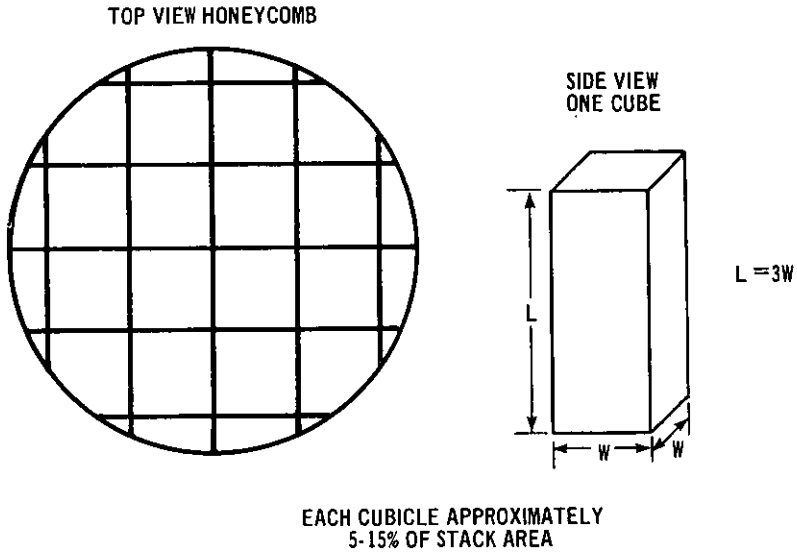

Figure 13. Straightening vanes.

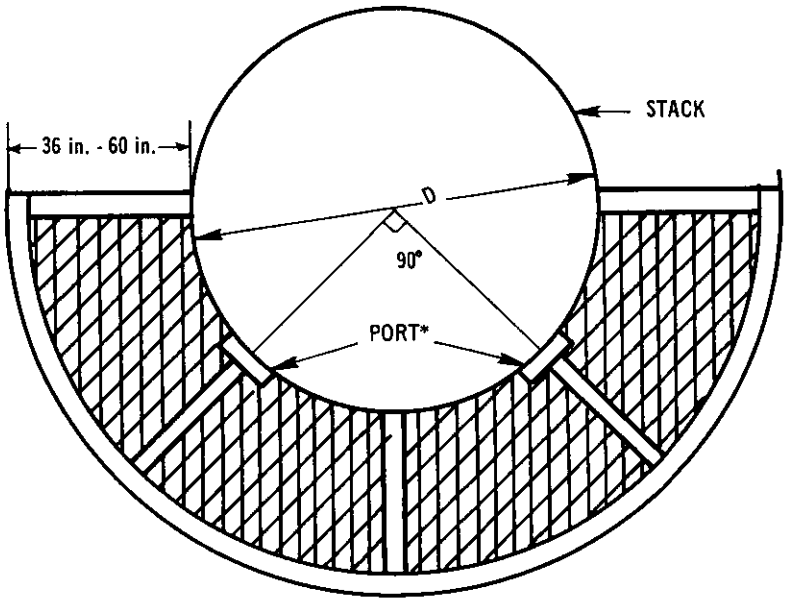

*PORTS - 4 in. NIPPLE (4 in. TO 6 in. LONG) WITH CAP.

Figure 14 Testing platform.

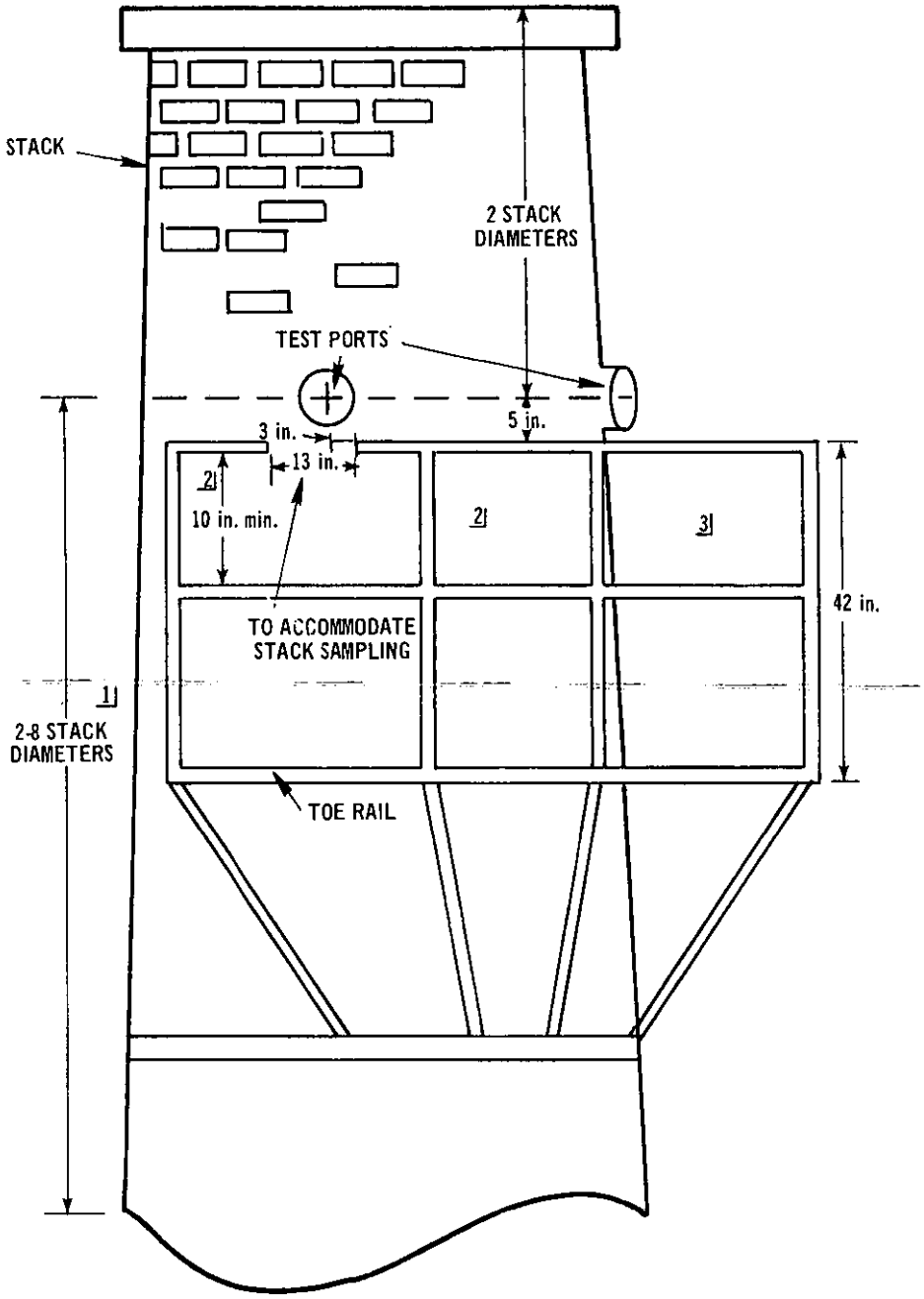

1 MINIMUM OF 2 STACK DIAMETERS ABOVE STRAIGHTENING VANES. EIGHT STACK STACK DIAMETERS ABOVE LAST DISTURBANCE IF STRAIGHTENING VANES NOT USED.

2 VERTICAL PLATFORM HAND RAIL BRACES NOT OVER 2-5 in. FROM EACH END OF THE 13 in. GAP IN THE HAND RAIL TO HELP SUPPORT TEST EQUIPMENT.

3 MIDDLE RAIL REMOVED AT WHICHEVER END OF THE PLATFORM THE LADDER IS INSTALLED.

Figure 15. Testing platform sideview.

SECTION VII

MEASURED PERFORMANCE DATA AND CONTROL EFFECTIVENESS

This section presents a summary of performance data and particle size measurements and discusses the effectiveness of the emission control devices/systems that were tested. The measures used to assess the comparative effectiveness of the equipment are: the Bay Area process-weight-rate emission standard; collection efficiency versus particle size for the wet collectors; and overall collection efficiency for the recycle systems.

Fisher-Klosterman Wet Collector

Table 3 presents a summary of measured performance data for the Fisher-Klosterman pilot-scale wet collector at the Neodesha plant. The particulate samples obtained during Tests 1 and 3 indicated the possibility of contamination of the outlet stream with particulate matter which had condensed in the ducting near the fan during periods when the F/K unit was not operating. This would have the effect of decreasing the apparent collection efficiency. The ducting was redesigned and the air and water flow rates were adjusted for Test 6 with the resulting improvement in the collection efficiency.

It should be noted that the average particle size at the inlet to the F/K unit was much smaller than the size measured in the cyclone effluent at the Neodesha plant during the 1971 growing season. The particulate loading was also considerably reduced from that which was measured in 1971. This may be due to the long length of small diameter duct which transported the gases to the F/K unit. It appears likely that some of the large particles were deposited on the inside surfaces of this connecting ductwork.

Figure 16 presents the particle size distribution obtained at the inlet to the F/K collector. The fine particle size and the low grain loading at the collector outlet made it impossible to obtain an acceptable size distribution measurement.

Based on the average of three tests, the F/K collector reduced particulate emissions by 46%. However, the reduction in emissions on Test 6, after the system was modified to eliminate condensation, was 58.6% as compared to an average of 40% on Tests 1 and 3.

APPCOR Wet Collector

Table 4 presents a summary of measured performance data for the APPCOR pilot-scale wet collector. During testing of the APPCOR unit at the Neodesha plant, an attempt was made to increase emissions. This apparently resulted in considerably larger particle size at the inlet to the APPCOR unit than had been measured in the 1971 tests of the effluent from the primary collector at the Neodesha plant.

Figure 17 presents the particle size distributions that were obtained at the scrubber inlet and outlet.

Based on the average of three tests, the APPCOR unit reduced particulate emissions by 64%.

TABLE 3

FISHER-KLOSTERMAN PERFORMANCE DATA

Fisher-Klosterman Wet Collector
Scale: Pilot
Approx. Water Usage = 4 gpm
Approx. Pressure Drop = 11 in. H_2O

Plant: Neodesha
Source Operation: D+HM
Dryer Capacity = 20,000 lb/hr

	Pellets		Green Chops	Collector Inlet Conditions				Collection
Test	Prod. Rate (tons/hr)	Protein (%)	Moisture (%)	Flow Rate (acfm)	Partic. Loading (gr/acf)	Avg. Particle Size (μ)	Partic. Rate (lb/hr)	Efficiency (%)
1	2.85	18.5	74.3	859	0.0617	< 1	0.45	37.8
3	2.62	18.5	77.9	751	0.0818	< 1	0.53	41.5
6	3.00	-	71.2	672	0.0497	< 1	0.29	58.6

TABLE 4

APPCOR PERFORMANCE DATA

APPCOR Wet Collector
Scale: Pilot
Approx. Water Usage = 6 gpm[a/]
Approx. Pressure Drop = 7 in. H_2O

Plant: Neodesha
Source Operation: D+HM
Dryer Capacity = 20,000 lb/hr

	Pellets		Green Chops	Collector Inlet Conditions				Collection
Test	Prod. Rate (tons/hr)	Protein (%)	Moisture (%)	Flow Rate (acfm)	Partic. Loading (gr/acf)	Avg. Particle Size (μ)	Partic. Rate (lb/hr)	Efficiency (%)
2	2.75	21.8	76.8	2,230	0.0879	11.0	1.67	54.5
3	1.95	18.9	77.3	2,010	0.1160	-	2.01	67.2
4	2.15	19.9	73.8	2,100	0.1670	-	3.02	65.2

a/ Estimated recirculation rate

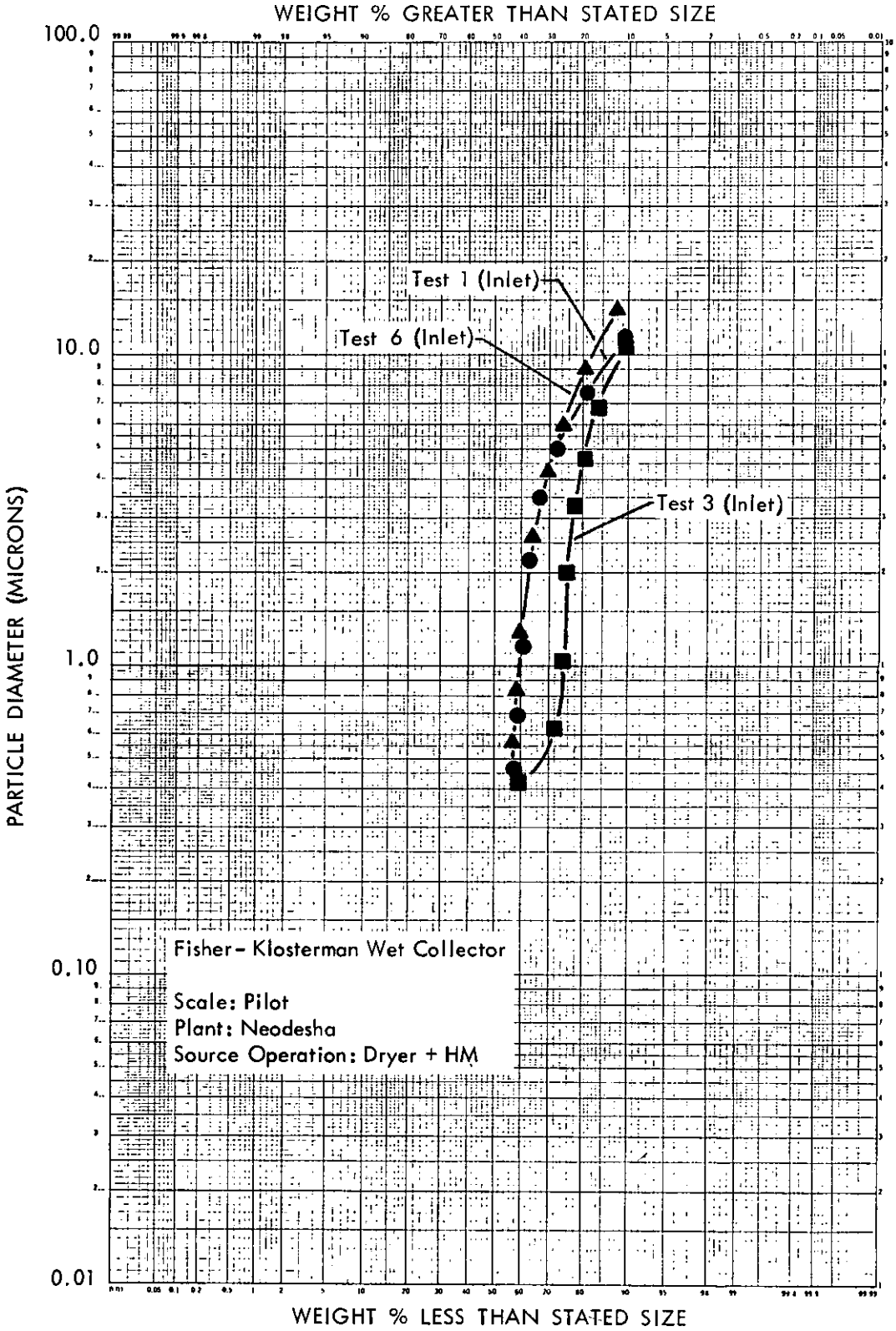

Figure 16- Particle Size Distributions - F/K Wet Collector

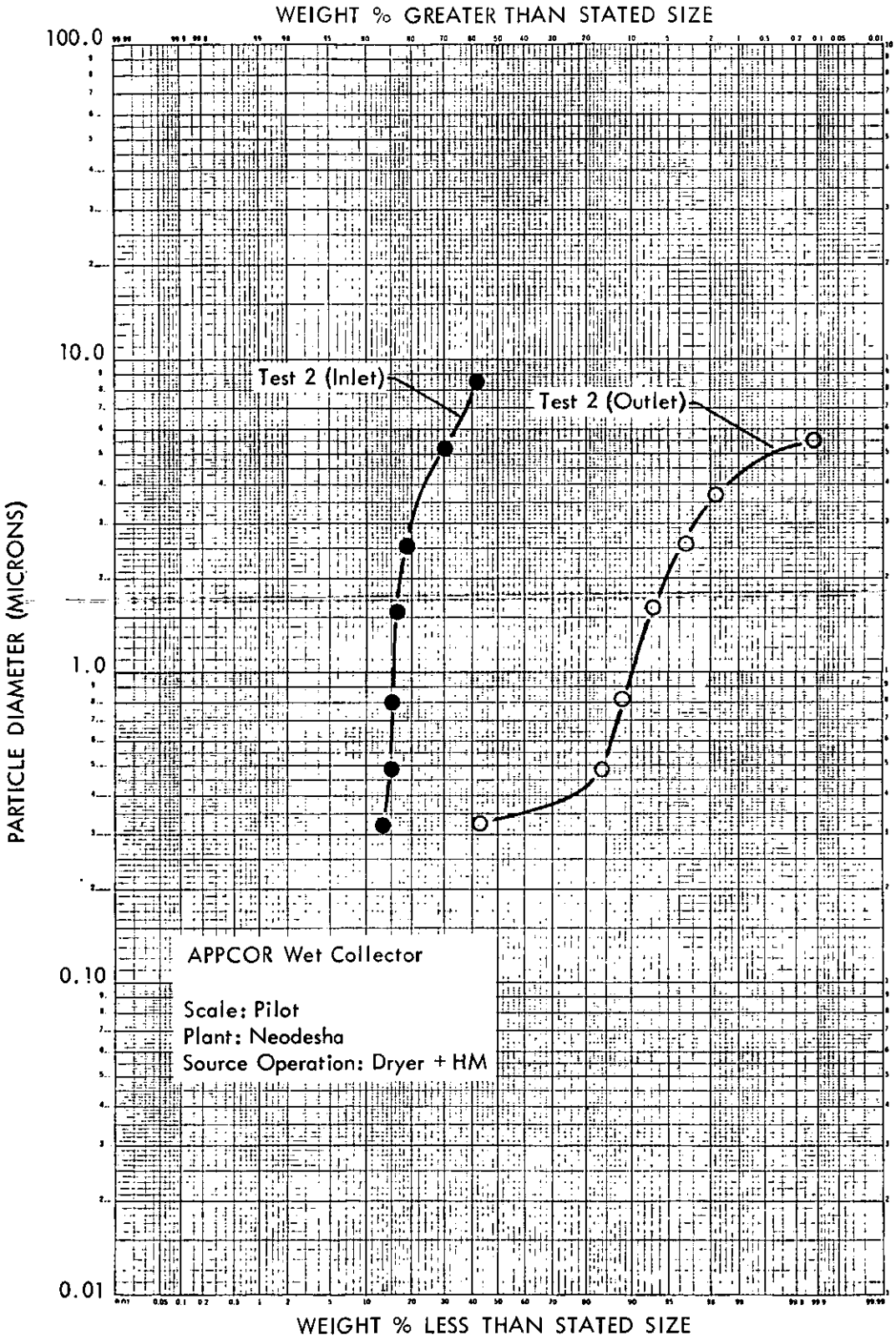

Figure 17 - Particle Size Distributions - APPCOR Wet Collector

Koch Wet Collectors

Table 5 presents a summary of 1972 performance data for the single Koch tray that was installed in the silo at the Oxford plant. The measured particulate loading and average particle size at the inlet to the silo was fairly typical of values for the primary cyclone effluents tested in 1971. Figure 18 gives the measured particle size distributions.

At the Oxford plant, the single tray Koch scrubber, based on the average of two tests, reduced particulate emissions by 57%. The Oxford plant was operated between 67% and 94% of capacity and had uncontrolled emissions of about 70% of the allowable limit of the Bay Area process-weight-rate standard.

Table 6 presents a summary of performance data for the two-tray Koch unit at the Rozel plant. When the Koch unit was connected, a deficiency in fan capacity and resultant decreased air flow caused the furnace to cycle from idle to maximum output. This apparently resulted in the generation of additional fine particulate matter from the burning of the alfalfa and lowered the average particle size at the collector inlet. (For Test 6 the scrubber unit was disconnected, and the emission rate was substantially reduced.) This operating problem introduces uncertainty into the validity of the results obtained at this plant and may have accounted for a measured efficiency below that of the single tray Koch scrubber tested at Oxford.

Figure 19 gives the particle size distributions that were obtained at the Rozel plant.

The two tray unit at Rozel, based on the average of three tests, reduced particulate emissions by 26.5%. This brought the plant into compliance with the Bay Area standard because the uncontrolled emissions were fairly close to compliance.

This dryer was operated above its rated capacity based on 75% moisture in the green chop and operated within compliance of the Bay Area standard on the one test made with the Koch unit disconnected.

Table 7 presents a summary of the 1973 data obtained on the Koch units at Oxford and Lawrence, Kansas. Efficiencies are not shown for these tests because simultaneous inlet and outlet measurements were not taken. The purpose of these tests was to measure only the degree of control which could be obtained with the wet scrubber; not the scrubber's efficiency.

TABLE 5

KOCH (OXFORD) PERFORMANCE DATA

Koch Wet Collector
Scale: Full
Approx. Water Usage = 125 gpm[a/]
Approx. Pressure Drop = 2.8 in. H_2O

Plant: Oxford
Source Operation: Dryer
Dryer Capacity = 12,000 lb/hr

Test	Pellets: Prod. Rate (tons/hr)	Pellets: Protein (%)	Green Chops Moisture (%)	Collector Inlet Conditions: Flow Rate (acfm)	Collector Inlet Conditions: Partic. Loading (gr/acf)	Collector Inlet Conditions: Avg. Particle Size (μ)	Collector Inlet Conditions: Partic. Rate (lb/hr)	Collection Efficiency (%)
1	2.07	20.9	80.3	19,300	0.0780	6.0	12.9	62.0
3	1.49	18.3	81.0	18,600	0.0673	-	10.9	52.6

a/ Estimated recirculation rate; estimated make-up rate = 2 gpm.

TABLE 6

KOCH (ROZEL) PERFORMANCE DATA

Koch Wet Collector
Scale: Full
Approx. Water Usage = 175 gpm[a/]
Approx. Pressure Drop = 6 in. H_2O

Plant: Rozel
Source Operation: Dryer
Dryer Capacity = 18,000 lb/hr

Test	Pellets: Prod. Rate (tons/hr)	Pellets: Protein (%)	Green Chops Moisture (%)	Collector Inlet Conditions: Flow Rate (acfm)	Collector Inlet Conditions: Partic. Loading (gr/acf)	Collector Inlet Conditions: Avg. Particle Size (μ)	Collector Inlet Conditions: Partic. Rate (lb/hr)	Collection Efficiency (%)
1	3.94	18.3	74.6	32,100	0.0986	-	27.1	19.2
2	4.31	-	71.9	33,100	0.1075	-	30.5	23.3
4	3.46	20.1	76.4	34,300	0.0674	< 1	19.8	36.9
6	4.22	18.6	59.3	42,600	0.0370	2.8	13.2	

a/ Estimated recirculation rate; estimated make-up rate = 2.5 gpm.

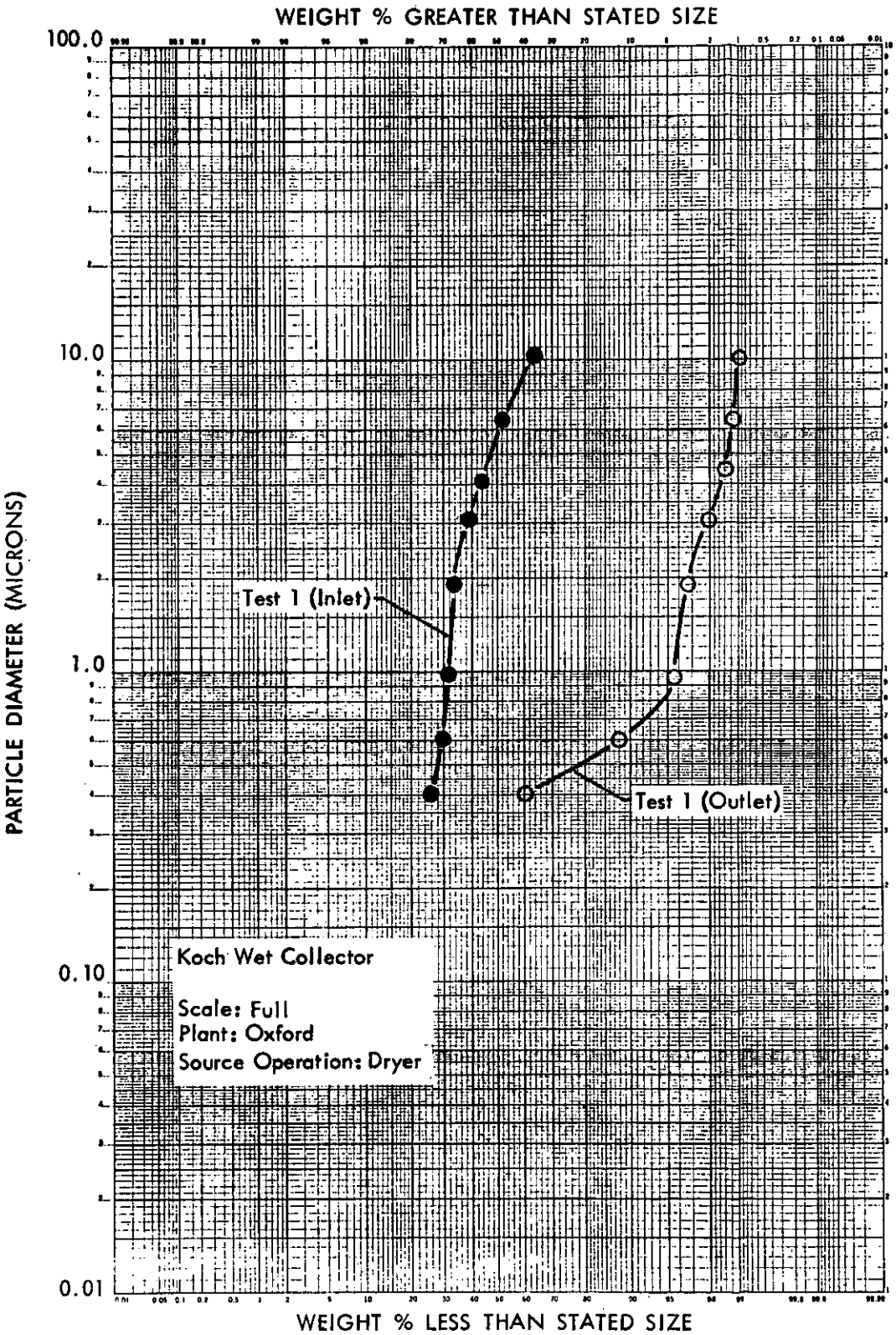

Figure 18 - Particle Size Distributions - Koch Wet Collector (Oxford)

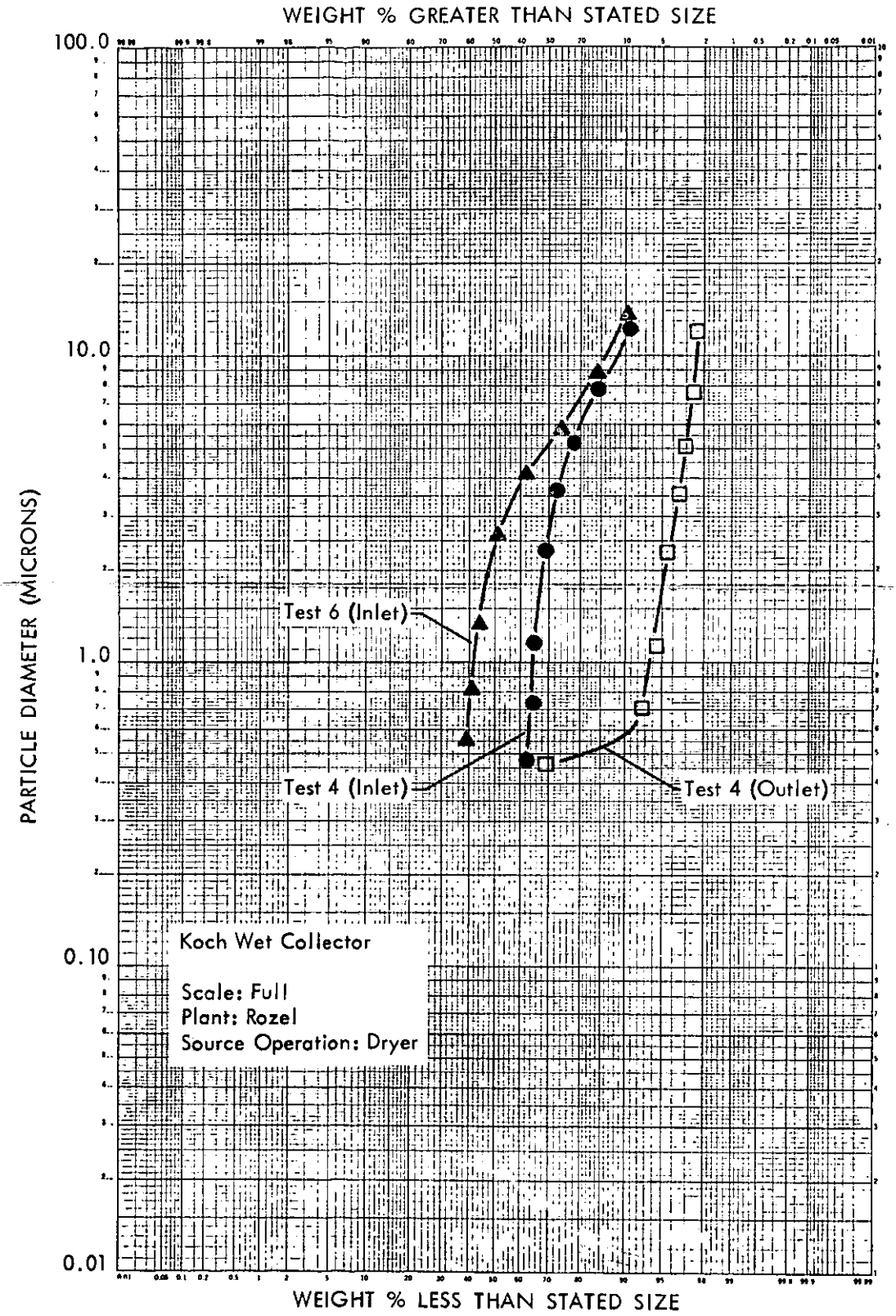

Figure 19 - Particle Size Distributions - Koch Wet Collector (Rozel)

TABLE 7

KOCH (OXFORD) 1973 PERFORMANCE DATA

Dryer Capacity = 19,000 lbs/hr

Test	Pellets Prod. Rate (tons/hr)	Pellets Protein (%)	Chops Moisture % Green	Chops Moisture % Dry	Source Operation	PWR lbs/hr	Evap. Rate lbs/hr	Partic. Rate (lb/hr)	Visual Opacity
104	2.83	18.4	75.0	9.85	D	20,800	15,100	9.2	
105	3.17	18.5	75.0	9.2	D	23,300	16,900	11.4	

KOCH (LAWRENCE) PERFORMANCE DATA

Dryer Capacity = 12,000 lbs/hr

109	2.75	17.0	78.6	14.6	D+HM	23,400	17,500	22	
110	2.50	17.0	80.1	17.4	D+HM	23,400	17,800	21.7	
111	2.55	17.0	77.5	16.7	D+HM	21,100	15,400	18.8	
112	2.50	18.6	81.5	14.9	D+HM 1/	24,800	19,400	8.30	
113	2.80	18.6	70.4	12.6	D+HM 1/	17,800	11,800	6.59	
130	2.45	16.3	76.6	16.9	D+HM	19,500	14,000	28.5	
131	2.45	16.3	77.5	14.0	D+HM 1/	20,500	15,100	13.3	< 10
132	2.60	17.6	76.8	15.0	D+HM 1/	20,800	15,200	12.2	< 10
146	2.65	17.8	72.0	10.1	D+HM 1/	18,100	12,500	13.14	
147	2.42	18.8	76.8	9.7	D+HM 1/	20,000	14,800	13.60	
148	2.53	19.4	73.4	11.9	D+HM	18,200	12,700	41.21	

1/ With the wet scrubber in operation. On the other tests, the wet scrubber was by-passed.

During the 1973 tests at Oxford, the effluent from the primary cyclones for both drums was ducted to the silo containing the Koch Tray. The plant was well in compliance with the Bay Area Standard when operated up to 90% of evaporative capacity on slightly above average quality material (18.5% protein hay). The hammermill system was controlled with a bag filter which allowed only 0.01-0.03 lbs. of particulate emissions to escape per hour.

The plant at Lawrence, Kansas was tested both with and without the 2-tray Koch scrubber. These tests were not made simultaneously, but indicate a collection efficiency of 57% for the wet scrubber since the average uncontrolled emission rate was 26.44 lbs/hr with an average controlled emission rate of 11.28 lbs/hr. The plant was either in compliance or very close to compliance on all but one of the tests without the wet scrubber. Tests 146-148 were run at higher back-end temperatures and lower dry chop moistures than the previous tests in order to measure the effectiveness of the wet scrubber and the level of uncontrolled emissions under these conditions. The uncontrolled emissions increased substantially, but the controlled emissions remained virtually unchanged.

The mesh type mist eliminator used at Oxford and Rozel was susceptible to clogging. This problem apparently did not exist with the chevron type mist eliminator used in the scrubber at Lawrence, Kansas.

Air Conditioning Corporation Wet Collector

Table 8 presents a summary of performance data for the Air Conditioning Corporation wet collector at the Lexington plant. The measured particle size distribution and particulate loading at the collector inlet were typical of values for the primary cyclone effluents tested in 1971.

The Air Conditioning Corporation system reduced the primary cyclone emissions at the Lexington plant to a level well below the Bay Area standard. Based on the average of three tests, this unit reduced the particulate emissions by 79%.

It is likely that the measured collection efficiency of the Air Conditioning scrubber was substantially increased because of the large percentage (59-71%) of water vapor which condensed in the scrubber. The condensation of water vapor was greatly enhanced by the temperature of the water which was drawn from a nearby fire hydrant. Thus, these results do not necessarily reflect the efficiency of this unit under normal installation conditions where the water would be recycled. Recycled water becomes heated and effects very little condensation.

The Lexington plant had rather high uncontrolled particulate emissions for a plant operating at only about 40% of capacity.

Figure 20 presents the particle size distributions that were obtained at the ACC scrubber inlet and outlet.

TABLE 8

AIR CONDITIONING CORPORATION PERFORMANCE DATA

Air Conditioning Corp. Wet Collector
Scale: Full
Approx. Water Usage = 405 gpm
Approx. Pressure Drop = 3 in. H_2O

Plant: Lexington
Neodesha: Dryer
Dryer Capacity = 30,000 lb/hr

Test	Pellets		Green Chops	Collector Inlet Conditions				Collection
	Prod. Rate (tons/hr)	Protein (%)	Moisture (%)	Flow Rate (acfm)	Partic. Loading (gr/acf)	Avg. Particle Size (μ)	Partic. Rate (lb/hr)	Efficiency (%)
2	2.35	24.3	76.3	29,300	0.1434	4.8	36.0	72.8
3	1.95	24.5	82.3	32,200	0.0926	-	25.6	73.8
4	2.15	24.5	82.3	32,900	0.1331	-	37.5	91.5

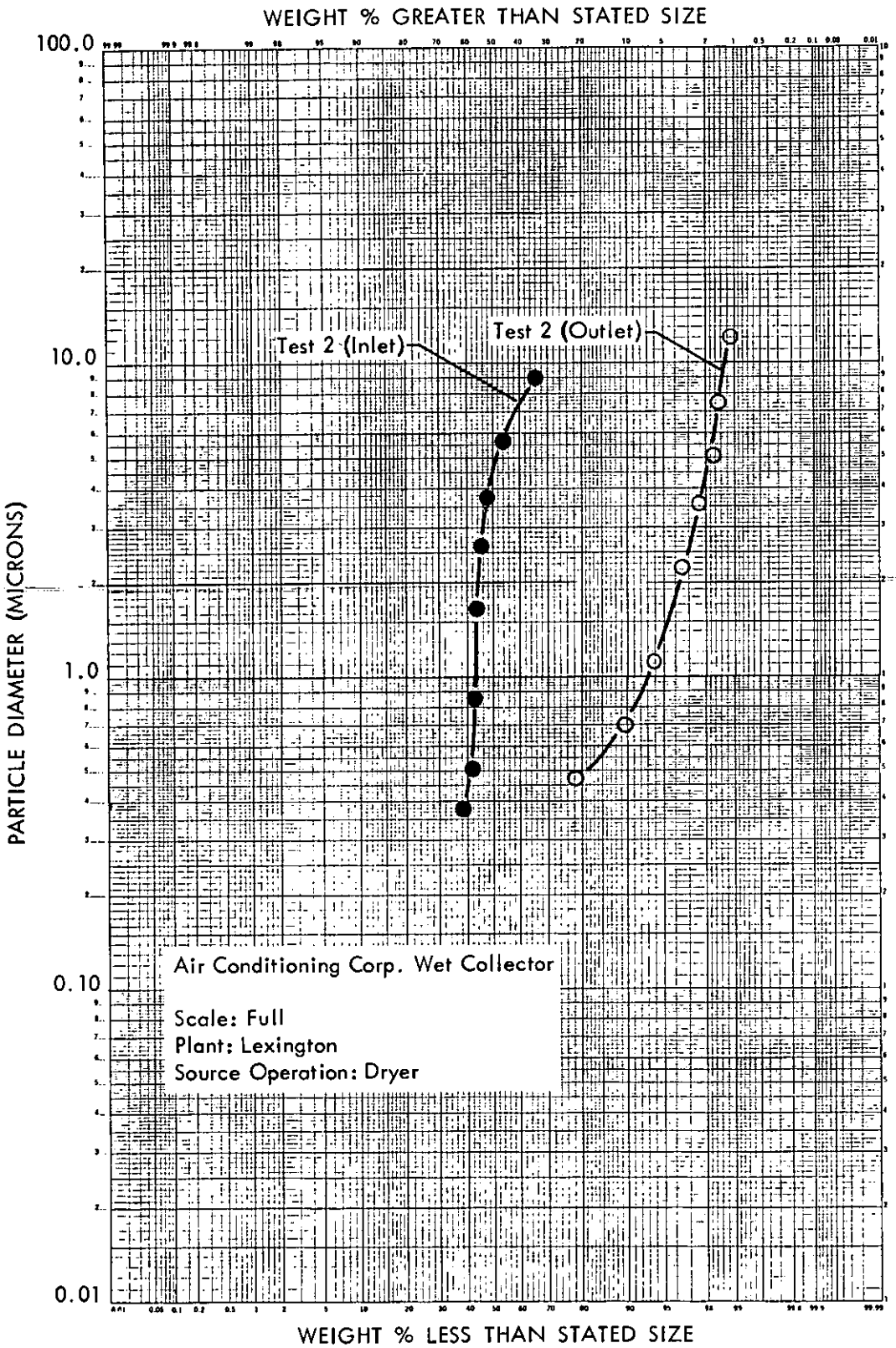

Figure 20 - Particle Size Distributions - ACC Wet Collector

Particle Size Distributions

The test results show particle size distributions from the one micron and larger size range, which includes the mechanically generated dusts, down into the sub-micron range, which almost certainly contains fumes formed by volatilization of part of the charge material. Another clear-cut indicator of the combination of a dust and fume in a gas stream is a clearly non-linear plot of cumulative frequency versus particle size on log-normal probability paper. The plotted curves most often show this statistically for the dryer effluent, although some of the other gas streams show relatively linear distributions.

Theoretically, any mechanical grinding or attrition process should produce dust which distributes in a log-normal manner. This is, a plot of the logarithm of the particle diameter versus the fraction in each size range should give an approximately normal distribution curve.

Whenever particles generated by two different mechanisms which have widely different average particle sizes are mixed together, they form a bi-modal particle size distribution when plotted on ordinary coordinates and when plotted on log-normal cumulative probability paper they make a curve very much like the ones shown in several of the plots.

Fractional Collection Efficiency

In assessing the performance of each wet collector as compared to the others, the fractional collection efficiency is a more meaningful measure than the overall collection efficiency, because the particle size distributions at the scrubber inlet vary from plant to plant. Figure 21 presents the fractional efficiency curves for the wet collectors, which were calculated from the inlet and outlet particle size distributions. Although it was not possible to plot a curve for the Fisher-Klosterman unit due to the lack of an acceptable size distribution measurement at the scrubber outlet, its overall performance in collecting fine particles was favorable.

Figure 21 shows that the APPCOR scrubber unit was most efficient in collecting the larger particles (approximately 20-microns) although the collection efficiency of this unit decreased rapidly as the particle size decreased. For the smaller particles (approximately 2-microns) the Koch unit at Oxford was the most efficient followed by the Koch unit at Rozel and the Air Conditioning unit. These collection efficiencies are within the accepted range for medium efficiency wet scrubbers.(6)

However, the efficiencies obtained did not correlate well with the scrubber pressure drop. The fundamental problem in relating the scrubber efficiencies to the test conditions under which they were obtained probably lies in the fact that the scrubbers are all basically well-equipped to collect the large particles, but not capable of doing very much of a job on the submicron fraction.

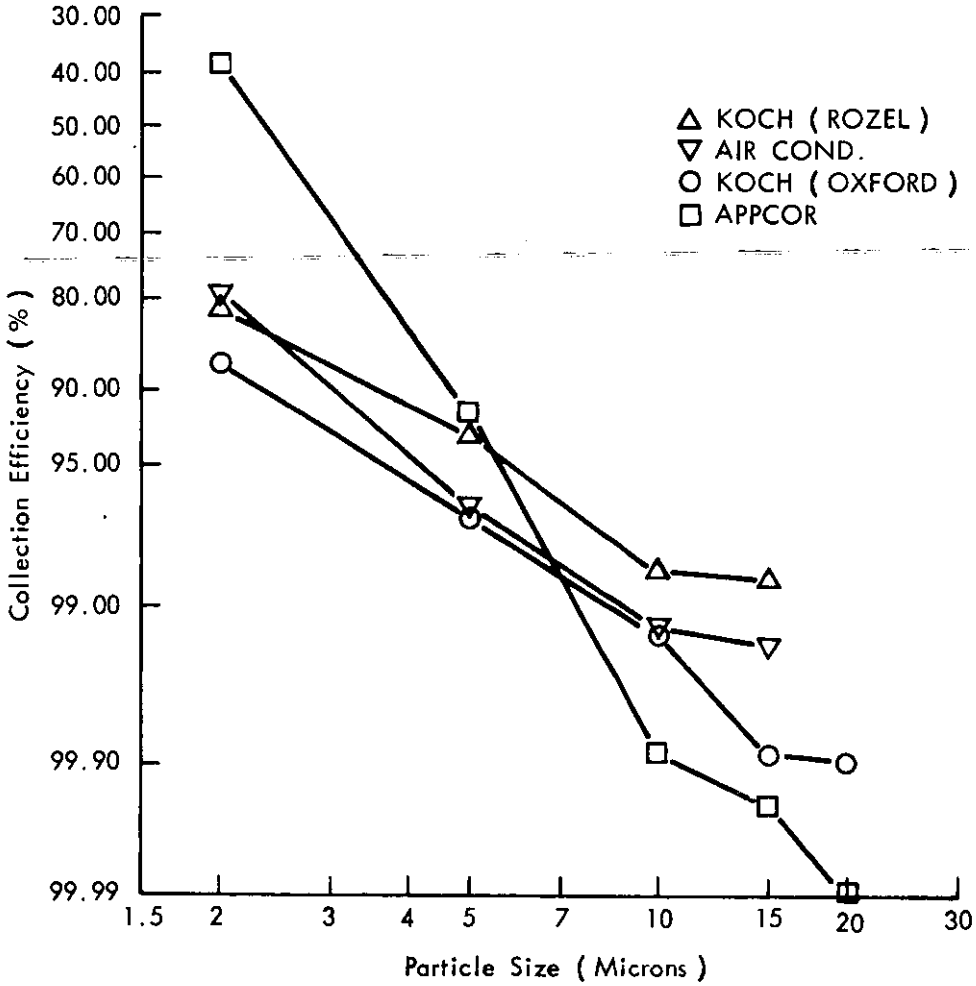

Figure 21 - Fractional Collection Efficiency Curves

Summary of Wet Scrubbers

Wet scrubbers are generally grouped in three more or less arbitrary ways. Low energy scrubbers or air washers operate at pressure drops on the order of 1 or 2" water column and are effective in collecting large particles (over two or three microns) at high efficiency. They are not useful for collecting fumes or fine dusts, and are not likely to be satisfactory for the alfalfa dryer application. Medium energy scrubbers usually operate from 2 or 3" water column to 10" or so, and are quite effective for all particulate matter except submicron particles.

There is every indication from the test results, that a scrubber with several inches of water pressure drop will bring the particulate emissions down by at least 50% and will probably bring a plant into compliance if the problem consists principally of dust rather than smoke emissions. Several scrubber types ought to be suitable. These include the multi-Venturi type, conventional low pressure drop Venturi scrubbers, wetted high velocity cyclones, etc.

In addition, there is some indication that a wet scrubber is helpful even when smoking is a significant problem. Although the scrubber is not likely to be highly efficient on the sub-micron smoke particles, it does do a good job of cutting the accompanying dust emission down, and may improve the appearance of a smoky plume considerably.

High energy scrubbers with pressure drops ranging from 10" to as high as 120" water column are frequently used to collect fume-like materials from such sources as BOF steel making furnaces, glass melting furnaces and coal dryers. While Venturi scrubbers at pressure drops on the order of 60" water column are quite effective in capturing submicron fume particles from smelting applications, etc., they are often inadequate for the collection of organic fumes. This is probably due more to the low specific gravity of the fume material than to a large difference in particle size. The former are usually some 2.5 times as dense as water, while the organic fumes tend to be about the same density as water, or a little less.

The probability is great that a high energy Venturi scrubber would have to operate at pressure drops between 60 and 100" water column in order to reach collection efficiencies on the order of 90% or so of the fume materials in the alfalfa dryer discharge.

Water Clarification

The problem of water clarification and sludge disposal is inherent to the use of wet scrubbers. At the Oxford Dehydrating plant, Oxford, Kansas, this problem was solved with the following arrangement. The bottom fourteen feet of the 10' X 60' concrete silo was used as a storage tank for the water which were circulated over the Koch tray in the silo. The bottom of the storage tank has a cone shaped hopper with a drain at the lowest point.

When the scrubber is in operation, ten gallons of water sludge is drained off per minute and pumped to a settling and evaporation pond. This pond is waterproof and after the sludge settles to the bottom, excess water is pumped to four rain bird spray nozzles, irrigating a grass sodded area.

There is no noticeable odor throughout this system when only the effluent from the primary collector is handled by the wet scrubber. Approximately once a year the collection pond is drained, the sludge is removed and spread on an alfalfa field for fertilizer.

A pilot commercial water clarifying unit was used for a few days in 1973 at the Oxford Dehydrating Co. plant. Feed rate to the unit was measured at slightly over 10 gallons per minute. Chemical treatment consisted of the addition of lime and a synthetic polymer, Drewfloc 260. The lime was added at a rate of approximately 3 lbs per hour to produce a pH of 7. The polymer was added at the rate of 1 lb/10 hrs. The cost of this chemical treatment was roughly 25¢ per hour.

A clear effluent was produced almost immediately after chemical treatment was initiated. The amount of solids removed indicates the necessity for desludging the unit every eight hours. The volume of concentrated sludge, while subject to variation from operation to operation, would probably be about 1/20th of the feed volume, or 240 gallons every eight hours.

As an alternative to using lime as the alkali source, it may be beneficial to use something else which would produce a more soluble salt, such as sodium hydroxide or soda ash. Spot checks run on beakers full of the clarifier feed indicate that the primary function of lime is to adjust pH to a point where the flocculent or polymer would be effective. If a sodium based alkali is used rather than lime, there would be less chance of developing a saturated solution with respect to calcium salts in the scrubber itself. The need to use a sodium based alkali would have to be evaluated on an individual basis dependent upon the calcium hardness of the make up water to the scrubber.

A flotation type water clarifying unit was designed, constructed and installed by Western Alfalfa Corp. personnel at the Lawrence plant. This unit worked quite satisfactorily, during the wet scrubber tests, and did not require the use of chemicals to coagulate the solids.

Several corrosion problems have been encountered and should be taken into consideration whenever anyone uses wet scrubbing equipment for the collection of organic dusts. The water becomes acidic and will attack carbon steel and possibly concrete over a long period of time. The alternative solutions to this problem involve the use of corrosion resistant materials such as rubber, plastics, and stainless steel, or the controlled addition of lime or caustic to keep the water in the scrubbing system alkaline. Chemical control is probably the cheapest, but it requires very good operating attention. Even a few days of operation with acidic water is likely to damage carbon steel tanks, piping and pumps.

Thompson Recycle System

Table 9 presents a summary of 1972 performance data obtained for the Thompson recycle system at the Topeka plant. During the first week of testing (Tests 1-8), particulate loadings in the primary cyclone effluent and particulate emission rates were high, compared to average values measured (at other plants) in the 1971 study. There was also considerable evidence of the depositing and sloughing of particulate material from the inside of the ductwork. In order to reduce this problem, the manufacturer decided to insulate the fan, helical separator, and the outlet stack.

During the second week of testing (tests 9-12) particulate loadings and emission rates were considerably lower than during the first week, and the percent of particulate recycled was higher. Also, hay quality was higher. Test 11 was run with the recycle lines shut off and indicated little, if any, particulate buildup in the ductwork. However, flow plugging problems occurred frequently, mostly at the hammermill. After the testing had been completed, the manufacturers reported finding equipment malfunctions which they feel substantially impaired plant operations and particulate emission control.

Figure 22 presents the particle size distributions obtained at the outlet of the primary collector and at the inlet to the fan (locations one and five in Figure 7). These distributions show slight evidence of particulate agglomeration in the venturi sections and the static regain chamber. However, it should be noted that the outlet and inlet samples were taken on different days with different hay quality and production conditions.

The Thompson plant at Topeka was in compliance with the Bay Area standard when operated at less than 75% capacity. At the higher production rates (75% to 85% of capacity), the effectiveness of the recycle system was reduced. The use of water sprays in the feeder (tests 1, 8, 9, 10 and 12) may have reduced particulate emissions, however, this effect cannot be isolated from the effect of reduced process-weight-rate. During Test 11, the plant was nearly in compliance without recycle and without water sprays. During Test 8, a higher than normal water usage rate at the feeder was used to simulate a "wet" hay condition which occurs as a result of heavy dew or rain.

The 1973 test data, Table 10, obtained on the Thompson recycle system at St. Marys, Kansas show the plant to be well within compliance with the Bay Area standard even when operated above 100% of rated evaporative capacity. This is a definite improvement over the results obtained under the conditions of the 1972 Topeka tests. However, it is difficult to make a direct comparison between the two plants because the manufacturers rated the 12 X 42 drum, at St. Marys, at 27,000 lbs/hr evaporative capacity on 78% moisture green chops, whereas the 12 X 36 drum at Topeka was rated at 30,000 lbs/hr evaporative capacity on 75% moisture green chop.

The manufacturers estimated that the St. Marys system was recycling 40% of the primary cyclone outlet gases back to the furnace, primary cyclone, and drum.

TABLE 9

THOMPSON PERFORMANCE DATA

Thompson Recycle System
Scale: Full
Approx. Water Usage:
Feeder = 6 gpm
Venturi = 2 gpm

Plant: Topeka
Source Operation: Total
Dryer Capacity = 30,000 lb/hr

Test	Pellets Prod. Rate (tons/hr)	Pellets Protein (%)	Green Chops Moisture (%)	Water Usage (gpm) Feeder	Water Usage (gpm) Venturi	Sampling Location	Flow Rate (acfm)	Partic. Loading (gr/acf)	Partic. Rate (lb/hr)	% Partic. Recycled
1	3.45	17.0	73.0	c/	0	Inlet (1)	44,500	0.136	50.2	33.3
						Stack (2)	32,000	0.114	33.5	
3	4.63	16.5	73.0	0	0	Inlet (1)	43,800	0.328	123.0	4.9
						Stack (2)	29,100	0.470b/	117.0	
5	4.48	-	76.0	4.8	0	Recycle to:				-
						Primary Cyclone (6)	3,150	0.681	18.4	
						Drum (7)	2,620	0.448	10.1	
						Furnace (8)	6,470	0.314	18.8	
6	4.43	18.5	76.6	0	0	Inlet (1)	42,800	0.278	102.0	18.4
						Stack (2)	32,500	0.299	83.2	
8	4.18	18.6	76.0	12.0	1.9d/	Inlet (1)	41,900	0.211	75.7	35.4
						Stack (2)	36,400	0.157	48.9	
9	3.85	19.3	77.7	2.4	2d/	Inlet (1)	40,800	0.166	55.6	54.9
						Stack (2)	35,700	0.082	25.1	
10	3.65	21.6	78.5	5.4	2d/	Inlet (1)	41,100	0.101	35.8	41.1
						Stack (2)	36,200	0.068	21.1	
11a/	4.25	21.4	76.2	0	0	Inlet (1)	41,200	0.148	52.4	0
						Stack (2)	42,200	0.137	49.3	
12	2.76	20.0	74.9	5.8	2d/	Stack (2)	34,800	0.066	19.5	21.4
						Recycle to:				
						Primary Cyclone (6)	2,700	0.135	3.1	
						Furnace (8)	5,000	0.052	2.2	

a/ Without recycle.
b/ Average particle size = 7 [illegible]
c/ Volume of water not measured.
d/ Volume estimated.

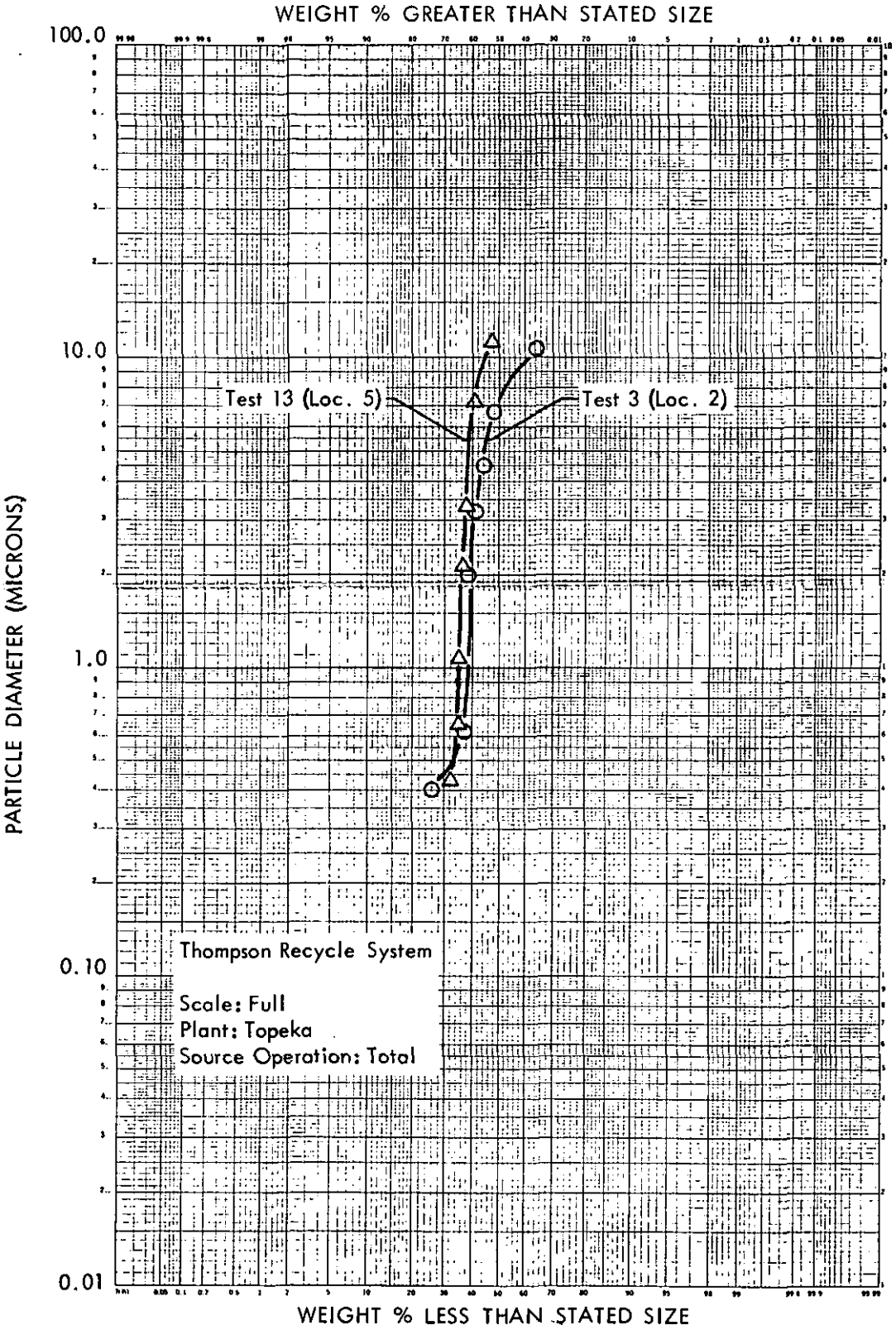

Figure 22 - Particle Size Distributions - Thompson Recycle System

TABLE 10

THOMPSON PERFORMANCE DATA

Thompson Recycle System
Scale: Full

Plant: St. Marys
Dryer Capacity = 27,000 lb/hr
@ 78% Moisture

Test	Pellets Prod. Rate (tons/hr)	Pellets Protein (%)	Chops Moisture % Green	Chops Moisture % Dry	Source Operation	PWR lbs/hr	Evap. Rate lbs/hr	Partic. Rate (lb/hr)	Visual Opacity
120	3.90	21.5	76	4.2	D+HM+PM	30,000	22,400	14.7	
121	3.90	20.7 1/	78.8	6.0	D+HM+PM	34,100	26,400	17.1	< 10
122	4.34	20.7 1/	76.0	5.5	D+HM+PM	33,600	25,100	24.5	< 10

1/ Protein content of only one sample taken, during these two tests, by the plant operating personnel. The pellets which were loaded "on stream" into a rail car during the day of these two tests were reported to contain 17.2% protein.

Heil Recycle System

Table 11 presents a summary of performance data for the Heil recycle system at the Grand Island plant. Testing was done with and without recycle to determine the effect of the recycle system. Without recycle, emission rates and particulate loadings in the primary cyclone effluent were high compared to average values measured (at other plants) in 1971, although the average particle size was fairly typical. Figure 23 presents the particle size distributions that were obtained at the outlet and recycle locations.

With the recycle system in operation, the particulate loading and average particle size at the cyclone outlet were substantially reduced. However, controlled dryer emissions exceeded the Bay Area limitation in two out of three cases. The plant was operating between 80% and 90% of capacity.

The test results show the Heil skimmer arrangement to be effective in concentrating the larger particles in the recycle stream. The grain loading in the recycle gases was greater by a factor of 1.2 - 3.9 than the grain loading in the outlet gases. This is supported in test 9 by an average particle size of 7.7 microns in the recycle gases as compared to an average particle size of less than one micron in the outlet gases.

There was evidence of considerable buildup of particulate matter on the interior walls of the extension duct. A cake of 4-5 in. of deposited material was removed from the bottom interior of the duct prior to the initial testing. According to a Heil representative, this material had accumulated during about one month with the recycle system in operation. The fact that the particulate matter was preferentially deposited on the bottom of the extension duct indicated that particulate was settling from the effluent stream; the observed flow velocity with recycle averaged only about 1,800 ft/min.

Table 12 contains the 1973 test data obtained on the Heil recycle system at Dundee, Kansas. Tests were not conducted to determine the emission reduction caused by partial recycling of the primary cyclone gases back to the furnace. However, the total effect of recycle, plant design, and operating procedures was a plant with emissions at 1/3 the allowable levels of the Bay Area Standard.

The tests were run at 84% to 123% of rated capacity based on 34,000 lb/hr evaporative capacity at 75% moisture in the green chops.

A comparison of test 136 with tests 137 through 139 shows the tremendous effect of dry chops moisture content on visual opacity. At 7% moisture in the dry chops, visual opacity was 35-40%, whereas at 11% dry chops moisture, visual opacity was less than 10%. The effect on total particulate emissions was not appreciable.

The Dundee plant was equipped with a bag filter for control of the hammermill system emissions.

TABLE 11

HEIL PERFORMANCE DATA

Heil Recycle System
Scale: Full

Plant: Grand Island
Source Operation: Dryer
Dryer Capacity = 34,000 lb/hr

Test	Pellets Prod. Rate (tons/hr)	Pellets Protein (%)	Green Chops Moisture (%)	Outlet Flow Rate (acfm)	Outlet Partic. Loading (gr/acf)	Outlet Partic. Rate (lb/hr)	Recycle Flow Rate (acfm)	Recycle Partic. Loading (gr/acf)	Recycle Partic. Rate (lb/hr)	% Partic. Recycled
1	5.35	19.1	74.0	31,000	0.105	28.0	-	-	-	-
2[a]	4.83	19.0	74.7	54,800	0.122	57.4	-	-	-	-
3	4.83	18.8	74.7	40,200	0.138	47.7	21,500	0.543	99.9	68.1
4[a]	5.49	-	74.2	46,600	0.283	113.2	-	-	-	-
5[a]	5.93	-	74.0	48,700	0.304[b]	127.1	-	-	-	-
7	5.22	-	73.1	36,400	0.101	31.6	21,000	0.125	22.6	41.7
9	5.65	-	74.6	36,100	0.116[c]	35.7	21,000	0.218[d]	39.2	52.3

a/ Without recycle.
b/ Average particle size = 3.0 μ.
c/ Average particle size = < 1 μ.
d/ Average particle size = 7.7 μ.

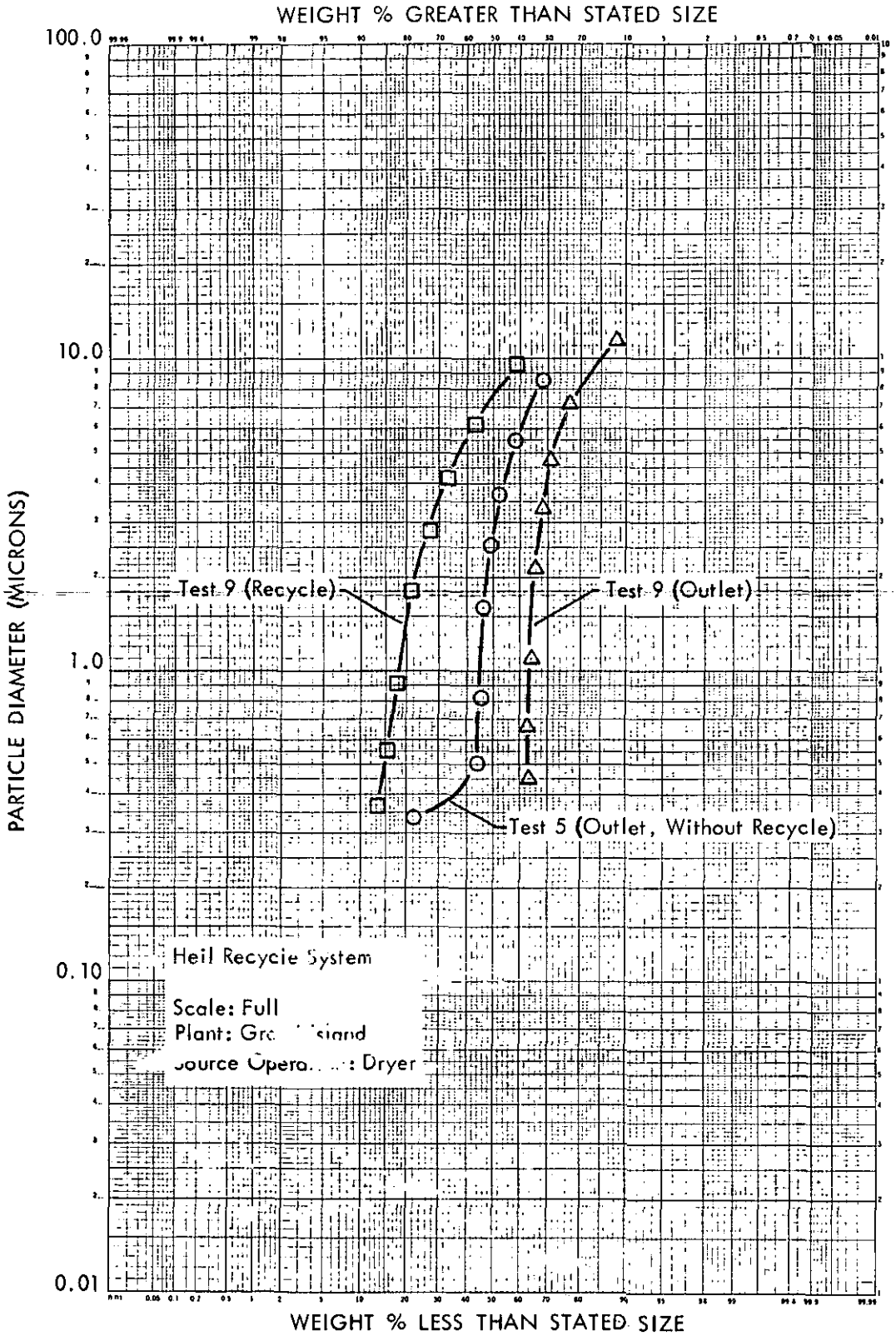

Figure 23 - Particle Size Distributions - Heil Recycle System

TABLE 12

HEIL PERFORMANCE DATA

Heil Recycle System
Scale: Full

Plant: Dundee
Dryer Capacity = 34,000 lb/hr

Test	Pellets Prod. Rate Tons/hr	Pellets Protein (1%)	Chops Moisture % Green	Chops Moisture % Dry	Source Operation	PWR lbs/hr	Evap. Rate lbs/hr	Partic. Rate (lb/hr)	Visual Opacity
136	5.62	14.3	63.0	7.0	D	27,900	16,800	12.8	38
137	6.50 1/	18.3	72.2	11.0	D	41,600	28,600	6.65	< 10
138	6.53	15.7	72.2	11.0	D	42,700	29,300	10.8	< 10
139	4.45	13.85	70.0	11.5	D	26,800	17,700	6.17	0
140	4.75	.5	71.5	9.6	D	30,900	21,200	9.28	

1/ Estimated

Summary of Recycle

With reference to the recycle systems, the maximum efficiency of collection and removal of particulate matter would correspond to the situation in which all of the recycled particulate matter is eliminated by incineration or by discharge from the bottom of the primary cyclone collector. In this case, the particulate removal efficiency of the recycle system would be equal to the percent of the particulate (in the primary cyclone effluent) which is recycled. These percentages are given in the last columns of Tables 9 and 11.

The total effectiveness of a recycle system in reducing plant emissions may be greater than the particulate removal efficiency, because of changes in the drying gases which could reduce the amount of particulate emissions created in the drum, and should be determined as follows:

$$\% \text{ Emission Reduction} = \frac{(\text{emission w/o recycle} - \text{emission w/recycle})}{\text{emissions w/o recycle}} \times 100$$

Partial recycling of the primary cyclone gases back to the furnace has several attractive potential advantages:

1. The substitution of steam for air appears to reduce the front end temperature enough to make a substantial improvement in the "smoke" problem, i.e., less smoke appears to be created with an effectively designed recycle system.

2. The particulate emissions from the primary cyclone are apparently reduced at least proportional to the amount of recycle.

3. There may be a fuel savings depending upon design of system and rate of production.

4. If a scrubber or other control device must be added, the net amount of gas to be treated is reduced by the amount of recycle.

A plant with recycle seems to require a little more operator attention and it is essential to have the recycle line adequately insulated to prevent condensation.

Effect of Recycle on Product Quality

During some of the tests on the Heil recycle system, samples of raw and finished product were collected and subsequently analyzed to determine the effect of recycle on carotene and xanthophyll stability.

Fresh alfalfa was collected from the dehydrator feeder by combining several grab samples for each condition. The fresh chops were placed in a plastic bag, quickly frozen with dry ice, returned to the laboratory and freeze-dried. Corresponding dehydrated meal samples were collected.

After drying and grinding the meals were analyzed for carotene and nonepoxide xanthophyll (NEX), protein, fiber and meal moisture. A single sample of each component was collected for experiment 3-0 and similarly analyzed. The average analyses values for each experiment are presented in Table 13.

These data indicate that "recycling" had no effect on carotene or xanthophyll stability under the conditions of these tests. This is probably because partial recycling of the gases did not reduce the oxygen content sufficiently to prevent nutrient losses during dehydration.

The "recycle" meal moistures were slightly higher (6.3 - 10.4%), but not sufficiently different from those of the regularly dehydrated alfalfa to influence xanthophyll retention. The moisture content of the alfalfa meal dried under "regular" conditions varied from 5.1 to 7.4%, which is a fairly good range for preventing xanthophyll losses which occur from overheating and overdrying.

Abilene Plant Modifications

Table 14 depicts the test results obtained on the Abilene plant. Tests 101 through 103 were on extremely low quality material, at high production rates and the particulate emissions exceeded allowable limits. Tests 114-116 were with varying degrees of recycle and indicate a reduction in emissions as the amount of gases recycled to the furnace is increased. However, this is contradicted by test 119 which resulted in a higher level of emissions than test 116 even though both were at the same level of recycle while test 119 was at a lower production rate and higher dry chops moisture. Thus, the lower level of emissions during test 116 may be the result of water spray into the gases just before they entered the silo.

The plant was within allowable emission levels during tests 141-145 since the sum of allowable emissions for each process (drying, grinding, and pelleting) is greater than the total emissions from the silo.

Although tests 117 and 118 were not run simultaneously with any of the other tests, it is reasonable to speculate that the particulate contributions from the hammermill and pellet mill systems were rather high during the other tests. Also, since the effluent from the hammermill and pellet mill systems discharged into the silo along with the effluent from the primary cyclone, this must have confounded the other test results making it impossible to determine the level of particulate emissions being emitted

TABLE 13

EFFECT OF EXHAUST GAS RECYLING ON CAROTENE AND XANTHOPHYLL STABILITY

Expt.	Sample	Carotene mg/lb[c]	NEX Xanthophyll mg/lb[c]	Protein %	Fat %	Fiber %	Meal Moisture %
1-0	Recycle (8/31)[a]						
	Freeze-dried	116.1	144.2	19.2			
	Dehy meal	99.2	123.5	20.3	4.83	25.6	7.7
2-0	Reg. Dehy (9/1)[a]						
	Freeze-dried	105.3	140.8	18.7			
	Dehy meal	105.6	128.5	19.5	4.58	28.9	6.1
3-0	Recycle (9/1)[b]						
	Freeze-dried	82.8	110.5	18.0			
	Dehy meal	88.0	109.8	17.8	4.54	32.2	8.9

[a]Values for Expt. 1-0 and 2-0 are the av. of three samples, anal. in duplicate.

[b]Value for Expt. 3-0 is one sample, anal. in duplicate.

[c]Analyses are on a moisture-free basis.

TABLE 14

ABILENE PERFORMANCE DATA

Dryer Capacity = 22,000 lbs/hr

Test	Pellets Prod. Rate (tons/hr)	Pellets Protein (%)	Chops Moisture % Green	Chops Moisture % Dry	Source Operation	PWR lbs/hr	Evap. Rate lbs/hr	Partic. Rate (lb/hr)	Visual Opacity
101	4.09	13.4	71.6	12.8	D+HM+PM	26,400	17,800	66.8	
102	4.08	11.4	64.1	9.0	D+HM+PM	20,900	12,600	72.5	
103	3.78	12.1	63.1	5.6	D+HM+PM	18,700	11,400	73.5	
114a/	4.03	17.2	68.7	11.8	D+HM+PM	24,200	15,600	51.0	
115b/	4.43	16.8	67.1	7.9	D+HM+PM	25,600	16,400	48.2	
116c/	5.07	17.3	63.5	8.1	D+HM+PM	26,500	16,000	31.7	
117	4.07				HM+PM			48.4	
118	4.60				HM+PM			36.9	
119c/	3.56	16.9	69.5	11.8	D+HM+PM	21,500	14,000	46.0	
141d/	4.60	14.5	75.5	13.5	D+HM+PM	34,400	24,700	28.5	25
142	3.82	16.8	75.8	10.6	D+HM+PM	28,900	21,100	30.6	26
143	5.10	13.8	71.5	12.9	D+HM+PM	33,200	22,300	34.9	48
144	3.35	19.4	77.0	10.3	D+HM+PM	26,400	19,600	31.2	
145	2.40	19.1	80.3	8.2	D+HM+PM	22,700	17,800	32.9	

a/ Recycling 11% of the primary cyclone effluent back to the furnace
b/ Recycling 15% of the primary cyclone effluent back to the furnace
c/ Recycling 30% of the primary cyclone effluent back to the furnace
d/ Test only 73.4% isokimetric

from the basic dehydration process. The silo may have collected some of the particulate matter emanating from the hammermill and pellet mill systems. However, the emission rate from the silo would undoubtedly have been much less had only the dryer emissions been discharged into the silo.

Neodesha and Berthoud Plant Modifications

The Neodesha test results, Table 15, are fairly encouraging, even though the plant was not in compliance during most of the tests because of the conditions under which the tests were conducted. It was impossible to run the plant under steady state conditions because of scarce hay and breakdowns with the harvesting equipment. The hay also contained a high amount of gases which contributes to excessive particulate emissions.

The Berthoud plant was not in compliance during its tests, Table 15, with the most apparent reason being the lower dry chops moisture content as compared to the Lawrence plant which operated in compliance even without the wet scrubber in operation, Table 7.

Comparison With The Bay Area Standard

Figures 24, 25, 26, and 27 present plots of the percent of allowable particulate emissions versus the percent of production capacity for each of the full-scale control devices/systems that were tested. The allowable emissions were determined according to the Bay Area emission standard. The production capacity was calculated on the basis of 75% green chops moisture, 8% dry chops moisture and 7% pellet moisture and on the evaporative capacity of the dryer. Figure 25 shows two plots, connected by a horizontal line, for each of the 1973 Thompson tests. The plots indicating the higher percent of production capacity were derived from a plant evaporative capacity based on 78% moisture green chops. The Thompson plots indicating lower percentage of production capacity and the plots for the other plants were derived from evaporative capacities based on 75% moisture green chops.

It should be noted that those plants with more than one source operation (shown on previous tables) have higher allowable emissions for a given process-weight-rate than the plants with only the one source operation, the dryer. This is because, for the multi-source operations, the allowable emissions for each process (drying, grinding, and pelleting) are totaled to give one allowable emission from the common discharge point for all the process; e.g., a plant with a process-weight-rate of 20,000 lbs/hr through the dryer would be allowed 19.2 lb. of emissions per hour from the primary cyclone if the primary cyclone is handling only the dryer discharge; whereas, another plant with the same process-weight-rate through the dryer would be allowed 29.6 lbs. of emissions per hour from the primary cyclone if it was processing 8,000 lbs. per hour through the hammermill and the hammermill system effluent was also being discharged through the primary cyclone.

TABLE 15

NEODESHA PERFORMANCE DATA

Dryer Capacity = 20,000 lbs/hr

Test	Pellets Prod. Rate (tons/hr)	Pellets Protein (%)	Chops Moisture % Green	Chops Moisture % Dry	Source Operation	PWR lbs/hr	Evap. Rate lbs/hr	Partic. Rate (lb/hr)	Visual Opacity
123a/	2.97	17.3	79.1	14.9	D+HM	26,600	20,100	28.2	
124	2.97	18.5	76.8	10.0	D+HM	24,300	18,000	44.0	
125a/	3.20	17.7	73.8	15.5	D+HM	23,000	15,900	28.9	34
126a/	3.10	17.6	70.6	13.6	D+HM	19,800	13,100	35.3	
127a/	2.77	14.8	76.4	14.1	D+HM	21,900	15,900	43.4	32
128a/	2.97	15.8	71.4	13.5	D+HM	19,300	12,900	42.2	
129	2.70	16.8	67.0	15.5	D+HM	15,300	9,300	23.7	

a/ Recycling approximately 10% of the primary cyclone effluent back to the furnace.

BERTHOUD PERFORMANCE DATA

Dryer Capacity = 20,000 lbs/hr

133	3.15	18.2	73.7	10.3	D+HM	22,300	15,800	46.5	
134	2.05	19.9	82.0	8.4	D+HM	21,300	17,100	31.7	
135	2.80	19.7	80.5	10.7	D+HM	26,500	20,700	45.8	

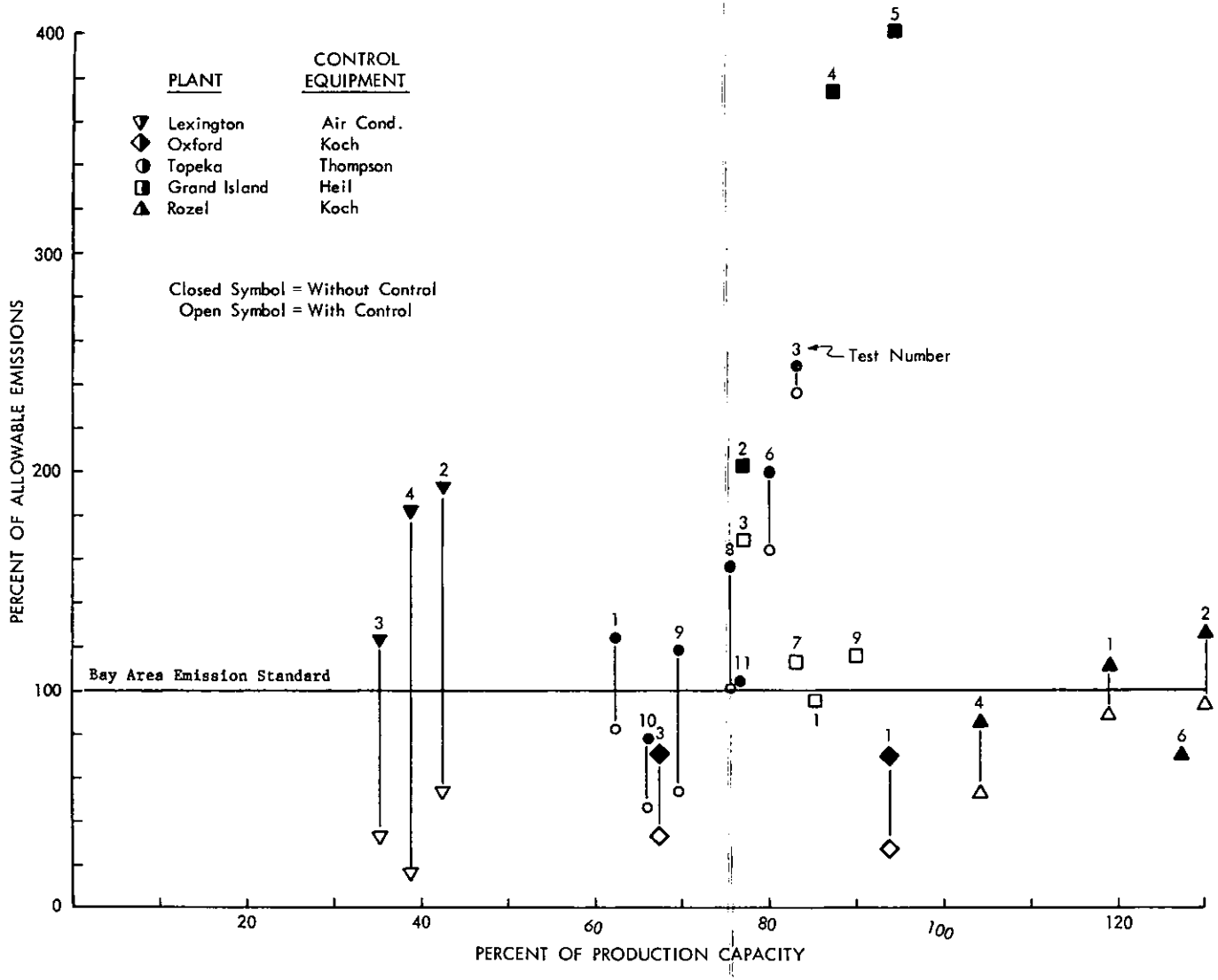

Figure 24 Control Effectiveness vs Bay Area Emission Standard

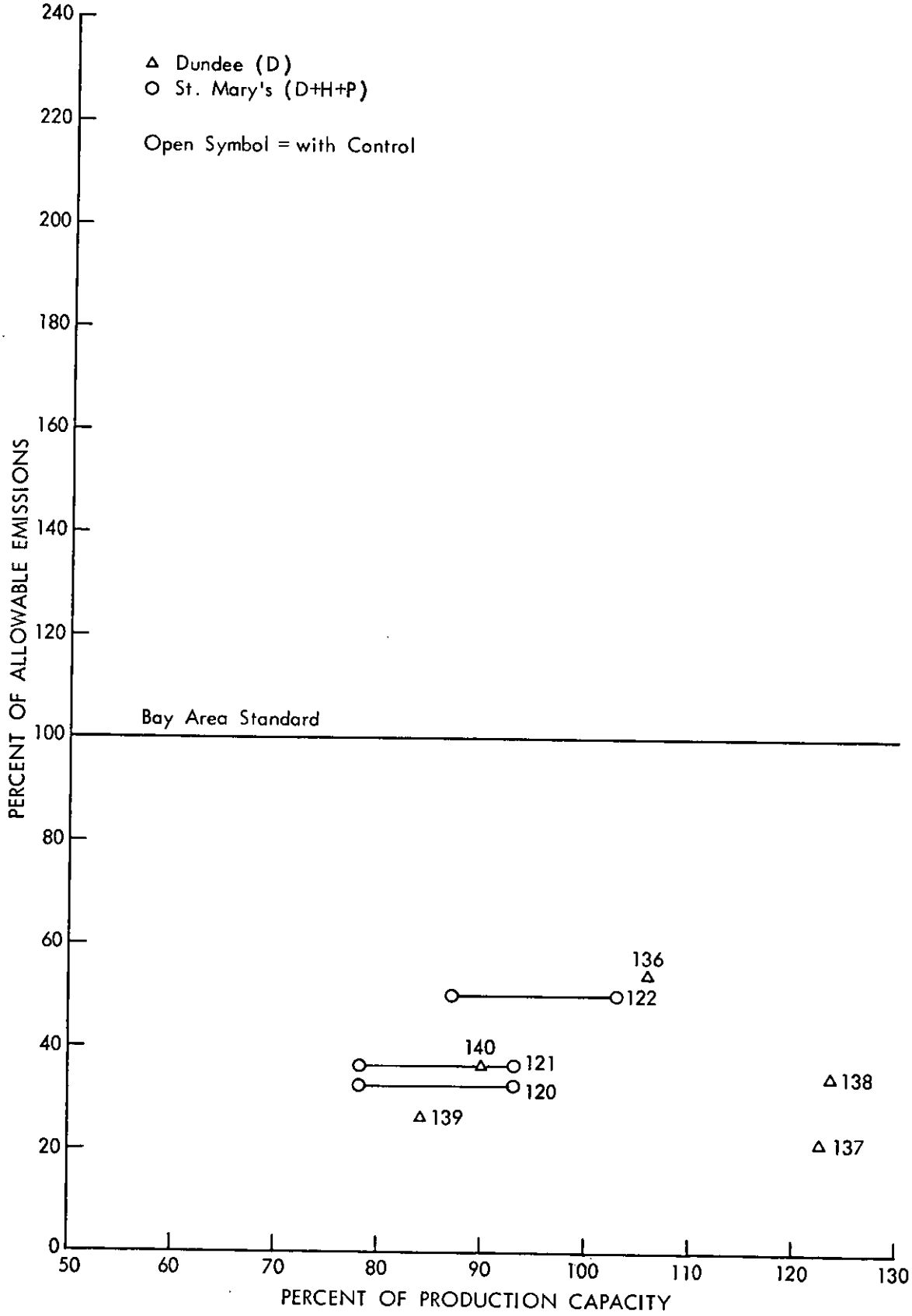
Δ Dundee (D)
O St. Mary's (D+H+P)
Open Symbol = with Control
Bay Area Standard
PERCENT OF ALLOWABLE EMISSIONS
PERCENT OF PRODUCTION CAPACITY
240
220
200
180
160
140
120
100
80
60
40
20
0
50
60
70
80
90
100
110
120
130
136
122
140
121
120
138
139
137

FIGURE 25

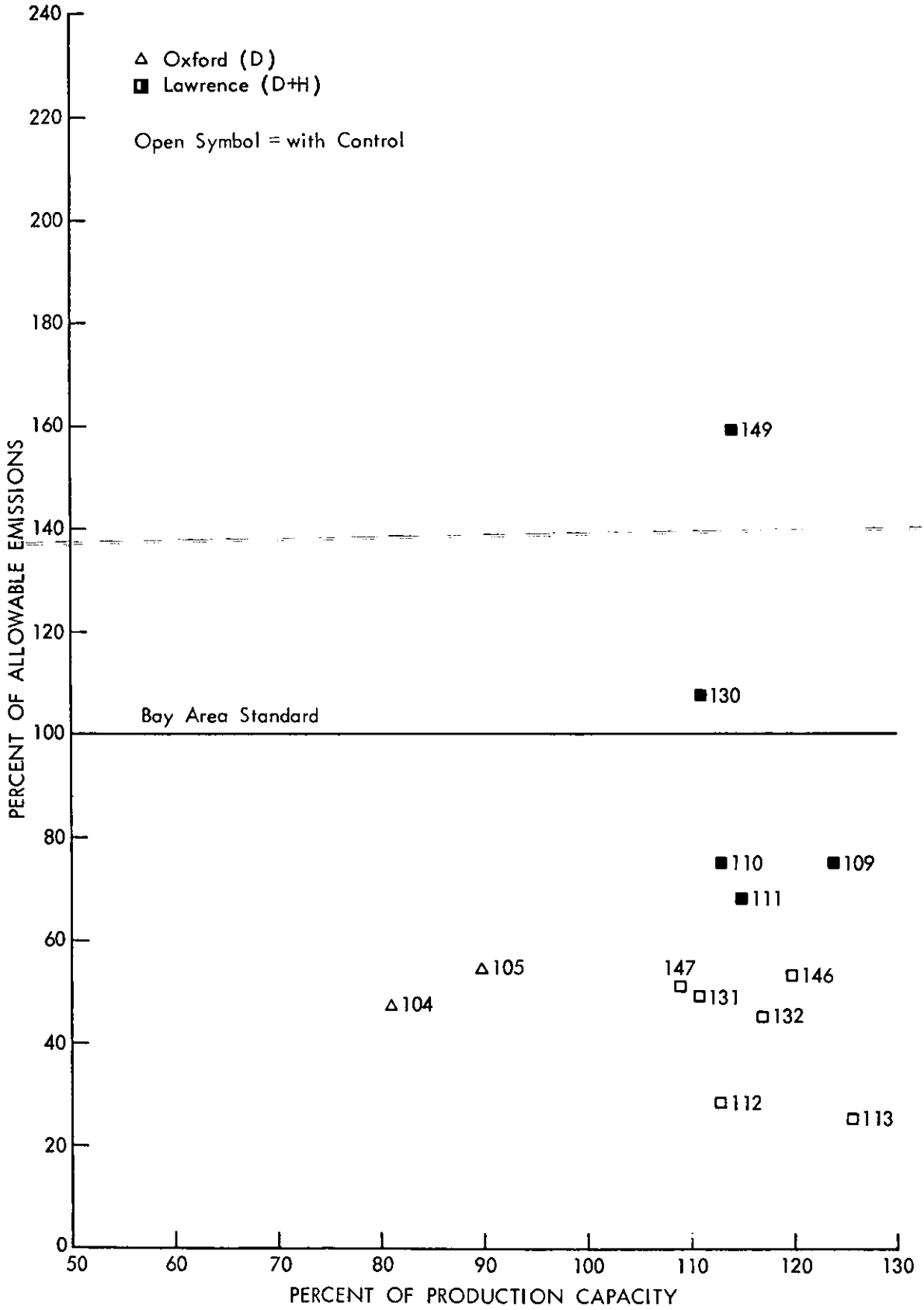
Oxford (D)
Lawrence (D+H)
Open Symbol = with Control
Bay Area Standard
PERCENT OF ALLOWABLE EMISSIONS
PERCENT OF PRODUCTION CAPACITY
240
220
200
180
160
140
120
100
80
60
40
20
0
50
60
70
80
90
100
110
120
130
149
130
110
109
111
105
104
147
146
131
132
112
113

FIGURE 26

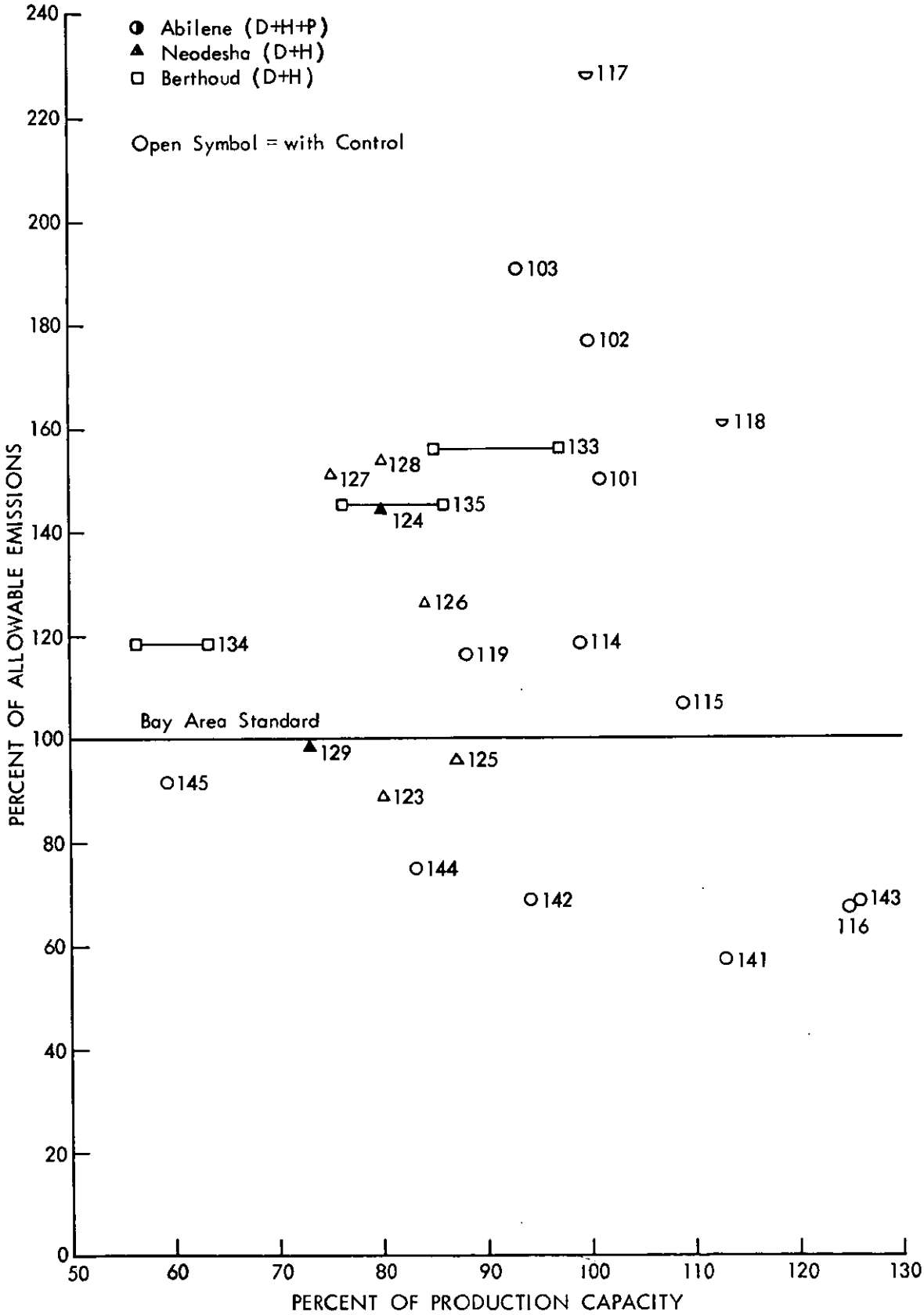
Abilene (D+H+P)
Neodesha (D+H)
Berthoud (D+H)
Open Symbol = with Control
Bay Area Standard
PERCENT OF ALLOWABLE EMISSIONS
PERCENT OF PRODUCTION CAPACITY
240
220
200
180
160
140
120
100
80
60
40
20
0
50
60
70
80
90
100
110
120
130
117
103
102
118
133
128
127
101
135
124
126
134
119
114
115
129
125
145
123
144
142
143
116
141

FIGURE 27

Visual Opacity

Visual opacity readings were made at some of the plants, by qualified State Control Department personnel, during the 1972 and 1973 source tests. Table 16 shows these visual opacity readings and the corresponding measured grain loadings and pounds of emissions per hour. The visual opacity is expressed as the average of all readings taken during a source test.

TABLE 16

VISUAL OPACITY READINGS

Test	Visual Opacity %	Particulate Emissions gr/acf	Particulate Emissions lbs/hr
9-2	39	.082	25.1
10-2	17	.068	21.1
11-2	45	.137	49.3
121	< 10	.061	17.1
122	< 10	.093	24.5
125	34	.089	28.9
127	32	.135	43.4
131	< 10	.049	13.3
132	< 10	.045	12.2
136	38	.066	12.8
137	< 10	.028	6.65
138	< 10	.046	10.8
141	25	.073	28.5
142	26	.079	30.6
143	48	.092	34.9

SECTION VIII

EFFECT OF PROCESS CONDITIONS

The results of ADA's 1971 study indicated a strong dependence of dryer-generated particulate emissions on input hay quality and dryer operating conditions. This section of the report quantifies that dependence through single-plant and multiplant correlations. The multiplant correlation includes data from the 1971 study.

This section also presents a comparison of cyclone collection efficiency and a tabulation of emission factors derived from the results of the 1971 and 1972 studies. Factors are given for the grinding and pelleting operations as well as the drying operation.

Single-Plant Correlation (Topeka)

Analysis of the performance data for a single plant indicated that the particulate emission rate from the primary cyclone collector was strongly dependent on the dry chops (or pellet) production rate and on hay quality (pellet protein). The production rate is a measure of the rate at which dry matter passes through the dryer.

Multiple regression techniques were used to correlate the data from the Topeka plant, which exhibited the greatest ranges of variation in process parameters. A high degree of correlation (multiple correlation coefficient = 0.98) was obtained with the following equation:

$$\text{Emission Rate} = 710 \times \frac{(\text{Prod. Rate})^{3.0}}{(\%\ \text{Protein})^{2.2}}$$

where the emission rate is expressed in lb/hr and the production rate in ton/hr.

This equation states that emissions nearly double at a constant production rate when the protein is decreased from 21% to 16%. Moreover, there is a cubic dependence on production rate; for example, if the production rate is increased from 75% of capacity to 100% of capacity, the rate of emissions is more than doubled. Although the number of data points used in developing this correlation equation was not large, the high degree of correlation indicates that this equation should be reliable in predicting the sensitivity of emissions to these two process parameters for this plant.

Since low quality hay and high production rate normally occur together, there is a very large difference in emissions possible between operating conditions during the high productivity period (midsummer) and the low productivity period (early and late summer).

Multiplant Correlation (Fine Particle Emissions)

Analysis of multiplant data (including data from the 1971 study) by multiple regression techniques also substantiated the dependence of the particulate emission rate on process parameters. However, the degree of correlation was sharply reduced due to the dissimilarities in plant operating characteristics, i.e., differences in dryer size and performance and in primary cyclone collection efficiency. The differences in dryer size were compensated for by introducing percent of production capacity into the correlation instead of the absolute production rate, and separating the dryers into two size categories. The differences in cyclone collection efficiency were compensated for by considering only fine particle (less than 5 μ) emissions, which are not efficiently collected by any of the cyclones.

For the dryers in the smaller capacity category (15,000 to 20,000 lb/hr of evaporation), a high degree of correlation (multiple correlation coefficient = 0.91) between fine particle emissions and process conditions was obtained with the following equation:

$$\text{Emission Rate}^{a/} = 306{,}000 \times \frac{(\%\ \text{of Prod. Cap.})^{1.45}}{(\%\ \text{Protein})^{5.67}}$$

A graph of the above equation is presented in Figure 28.

For the dryers in the larger capacity category (30,000 to 34,000 lb/hr of evaporation), only a moderate degree of correlation (multiple correlation coefficient = 0.71) could be obtained, and the reliability of the correlation equation, as a predictive tool, was correspondingly reduced.

In both the single plant and multiplant correlations between dryer-generated particulate emissions and process conditions, emissions (total and fine particle) were found to increase with increasing production rate and with decreasing hay quality.

---

a/ for particles <5 microns

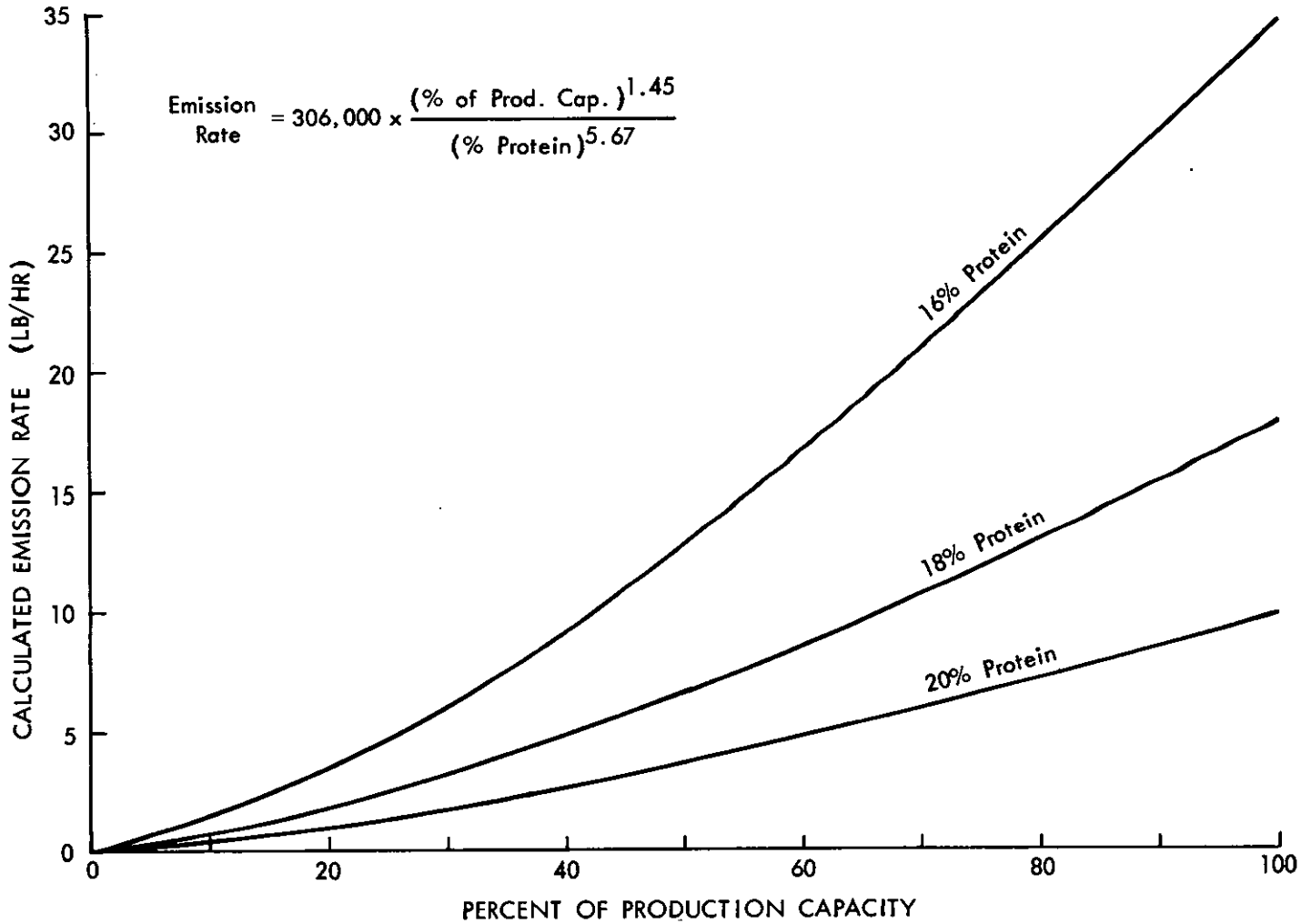

Figure 28 - Calculated Fine Particle Emissions (<5μ) -- (Smaller Dryers)

Cyclone Collection Efficiency

To compare the relative collection efficiencies of the primary collectors involved in this study and in the 1971 study, the assumption was made that the size distribution of the total particulates entering a primary collector did not vary significantly from one plant to another. Based on this assumption, high efficiency is indicated by a small fraction of large particles (> 5 μ) in the collector effluent. The results of this comparison are shown in Table 17; as expected, the standard conical cyclones are indicated to be the most efficient.

This, plus the grouping of the collectors by type, supports the assumption on which Table 17 was based.

TABLE 17

COMPARATIVE EFFICIENCIES OF PRIMARY CYCLONE COLLECTORS

Plant	Collector Type	WT % of Large Particles (> 5 μ) in Emissions
Rozel	Conical	25
Neodesha (1971)	Conical	40
Grand Island	Conical	45
Arlington	Conical	45
Rossville	Flat-bottom	50
Lexington	Flat-bottom	50
Oxford	Conical	55
Topeka	Flat-bottom	60
Darr	Cylindrical	80

Emission Factors

Table 18 presents a summary of uncontrolled emission factors for the drying, grinding and pelleting operation, and combinations thereof. These factors were derived from results of the 1971 tests of Plants A-D (1) and the 1972 tests of plants E-I. In the latter case, the uncontrolled emissions are the values at the inlets to control equipment or with recycle flows shut off.

As shown in Table 18 , the total plant emissions average less than 20 lb/ton of pellets (or meal). This is significantly less than the value of 60 lb/ton of meal reported by the U.S. Environmental Protection Agency (7) and commonly used by the states in estimating emissions from alfalfa dehydrating mills.

Table 18 shows the emissions from each source on plants which have separate outlets to atmosphere from the dryer, hammermill and pellet mill cyclone collectors. Plant D has one outlet for both the dryer and hammermill cyclones. Plants A, B and E return the hammermill and pellet mill cyclone effluent to the primary "dryer" cyclone and thus have only one emission source for the total plant. However, test A-102 is listed as dryer + hammermill because the pelleting system was shut down during this test and the one emission source contained only the effluent from the dryer and hammermill.

TABLE 18

UNCONTROLLED EMISSION FACTORS

Source Operation	Tests[a]		Average Emission Factor (lb/ton of green chops)		Average Emission Factor (lb/ton of pellets)
Dryer	C-307		6.55		25.27
	F-2,4,5		4.98		17.98
	G-1,3		1.42		6.78
	H-1,2,4,6		1.71		5.82
	I-2,3,4		3.12		15.27
		Mean:	3.55	Mean:	14.22
		St. Dev:[b]	2.19	St. Dev:[b]	8.11
Dryer + Hammermill	A-102				18.58
	D-405,406,408,410				9.98
				Mean:	14.28
				St. Dev:[b]	6.08
Hammermill	C-305				2.47
Pellet Mill	C-302				2.66
	D-402,403				1.33
				Mean:	2.00
				St. Dev:[b]	0.94
Total	A-101				18.22
	B-202,204,209,211				21.84
	E-11				12.33
				Mean:	17.46
				St. Dev:[b]	4.80

a/ Letter designations for plants are given in Appendix D.
b/ Standard deviation.

SECTION IX

CONTROL COSTS - MODEL PROBLEM

For the evaluation of the comparative costs of the control of dryer-generated particulate emissions, each equipment manufacturer was asked to submit performance and cost data applicable to the control of emissions from a "model" dryer/primary cyclone. The effluent properties which were specified for the model problems are representative of a typical alfalfa dehydrating plant but do not necessarily reflect the severest air pollution conditions which might exist. Make-up water properties and wastewater impurity limits were also given.

Table 19 presents the model problem data form. The requested performance data included the gas pressure drop and water usage for a control device/system which would meet or exceed the specified collection efficiency of about 60%. The requested cost data included costs of purchasing, installing and operating the control device/system and costs for water treatment.

Table 20 gives a summary of cost data submitted by each manufacturer. As indicated in the table, varying degrees of cost breakdown were specified in the completed forms.

The range of variation in the cost figures suggests that there were significant differences in cost estimating techniques and/or in cost items included in the totals. For example, it is difficult to imagine that the variation in ductwork costs (Item A-3) for a wet scrubber could be as large as shown. A second example would be the inclusion of freight costs; only Fisher-Klosterman specifically mentioned this item. Also it should be noted that the Koch figures are based on the installation of the scrubber on top of the primary cyclone and on the use of a sand-lined settling pond for disposal of scrubber liquid.

The wide variations in installation costs presented by the companies is partly because the model problem did not delineate specific installation parameters. However, it is difficult to imagine that a wet scrubber could be installed on any dehydrating plant for only $1,100 as shown by one company. Since the companies obviously used different assumptions in arriving at their installation costs, these figures cannot be used to compare the installation costs of one wet scrubber to another. These figures simply show that wet scrubber installation costs may range from $5,000 - $20,000.

In general the manufacturers will "guarantee" performance of emission control equipment if such equipment and/or the plant are operated in accordance with the manufacturer's instructions. The "guarantees" are also predicated on the uncontrolled plant being generally no more difficult to control than the model plant. However, the extent of the manufacturer's liability for equipment performance is usually not stated and therefore requires clarification.

TABLE 19

MODEL PROBLEM DATA FORM

PERFORMANCE AND COST DATA
- MODEL CONTROL PROBLEM -

Company _____

Information submitted by _____
Signature Date

Phone No. _____

I. Description of Model Control Problem

A. Effluent Properties (Primary Cyclone)

1. Flow rate = 30,000 acfm

2. Temperature = 225°F

3. Moisture content = 37% by vol.

4. Particulate loading = 0.20 grains/acf

5. Particulate size distribution:

85% finer than 20 μ
67% finer than 10 μ
51% finer than 5 μ
40% finer than 2 μ
33% finer than 1 μ

6. Uncontrolled emission rate = 51 lb/hr

7. Maximum allowable emission rate = 20 lb/hr

B. Water Properties

1. City water available at 80°F, 250 mg/l total dissolved solids, virtually free of suspended solids and BOD.

2. Wastewater impurity limits are < 500 mg/l TDS, < 30 mg/l SS, < 30 mg/l BOD, < 50 mg/l COD, $6.5 \leq pH \leq 8.5$.

TABLE 19 (Continued)

II. Performance Data

A. Pressure drop required = _____ in. of H_2O

B. Water required:

Recirculation rate = _____ GPM at _____ psi ΔP

Make-up rate = _____ GPM

C. Expected particulate collection efficiency = _____% by weight

Would you guarantee, based on the specified operating conditions, that emissions will not exceed the 20 lb/hr limit?

Yes _____ No _____

Would you be willing to bear the cost of any performance test by a mutually acceptable testing organization?

Yes _____ No _____

Comments:

III. Cost Data

A. Estimated equipment cost - including collector, ductwork, fans, pumps, water treatment facilities, and all appurtenances = $_____.

B. Estimated installation cost (for all of the above) = $_____.

C. Estimated total installed cost (A + B) = $_____.

D. Estimated annual operating cost (water and electricity), assuming 3,000 operating hour per year = $_____.

Comments:

TABLE 20

MODEL PROBLEM COST DATA[a/]

	Manufacturer					
	F/K	APPCOR	ACC	Koch	Heil	Thompson
I. Equipment						
A. Particulate Collection						
1. Collector	9,850	7,500		8,000		
2. Fan		5,600		n.r.	n.r.	n.r.
3. Ductwork	12,350	1,000		n.r.		
4. Other						
Total	$22,200	$14,100	$13,300	$8,000	$17,800	$17,000
B. Water Treatment						
1. Clarifier				n.r.		
2. Pump				1,000		
3. Other				1,000		
Total	$ 6,500	$ 5,500		$2,000	n.r.	n.r.
C. Total	$28,700	$19,600	$13,300	$10,000	$17,800	$17,000
II. Installation						
A. Materials						
B. Labor						
C. Total	$17,600	$15,000	$ 1,100	$ 5,000	$ 1,600	$ 3,000
III. Operation (3,000 hr)						
A. Power				$ 450		
(Pressure Drop H_{20})	6 in.	7 in.	3 in.	3 in.		
B. Water				$ 50	n.r.	
(Recirc.) gpm	122	60	405	125		0-8
(Make-up) gpm	2	3.7	7.2	12		
C. Labor				$ 500		
D. Total	$ 2,500	$ 2,090	$ 800	$ 1,200	($ 2,300)[b/]	($ 6,000)[b/]

a/ n.r. - item not required

b/ Fuel savings figures as provided by the manufacturers.

SECTION X

SAMPLING LOG, PERFORMANCE AND PROCESS DATA, AND PLANT EQUIPMENT SPECIFICATIONS

Table 21 presents the sampling log, i.e., the time during which each test was conducted, the dehydrating plants where tests were conducted, the control devices/systems that were tested and the sampling locations. The table also indicates the source operations, i.e., drying (D) and hammermilling (HM), which contribute particulate matter to the effluent from the primary cyclone. Test numbers ending in "A" denote particle sizing tests conducted with the Andersen in-stack impactor. In all tables, "I" refers to an inlet sample, and "O" refers to an outlet sample.

Tables 22-29 present performance data for each of the particulate emission control devices/systems which were tested and process data for each of the plants where the control equipment was installed. Table 22 lists the factors used in calculation of the quantities listed in Tables 23 through 36.

Table 37 lists information on the rotary drum dryers at the alfalfa dehydrating plants which were utilized in the studies reported herein.

TABLE 21

SAMPLING LOG

Plant/Source Operation	Control Device/ System	Sampling Location	Test Number	Date	Time Start	Time Finish	Sampling Duration (min)
Neodesha/D+HM	Fisher-Klosterman (pilot scale add-on)	Inlet	1-I	7-26-72	2:22 p.m.	4:18 p.m.	60
		Outlet	1-O	7-26-72	2:25 p.m.	4:21 p.m.	60
		Inlet	2-IA	7-26-72	5:21 p.m.	5:41 p.m.	20
		Inlet	3-I	7-27-72	2:24 p.m.	4:36 p.m.	60
		Outlet	3-O	7-27-72	2:25 p.m.	4:38 p.m.	60
		Inlet	4-IA	7-27-72	3:26 p.m.	3:55 p.m.	25
Topeka/Total	Thompson System (full scale)	Inlet	1-1	8-08-72	4:40 p.m.	7:17 p.m.	51
		Stack	1-2	8-08-72	4:40 p.m.	7:13 p.m.	72
		Inlet	2-1A	8-09-72	1:13 p.m.	1:19 p.m.	6
		Stack	2-2A	8-09-72	1:15 p.m.	1:21 p.m.	6
		Inlet	3-1	8-09-72	3:59 p.m.	7:39 p.m.	52
		Stack	3-2	8-09-72	3:59 p.m.	7:11 p.m.	52
		Stack	4-2A	8-10-72	10:30 a.m.	10:30 a.m.	1/4
		Recycle to Primary Cyclone	5-6	8-10-72	1:05 p.m.	1:56 p.m.	36
		Recycle to Drum	5-7	8-10-72	1:05 p.m.	1:41 p.m.	36
		Recycle to Furnace	5-8	8-10-72	1:08 p.m.	1:44 p.m.	36
		Inlet	6-1	8-11-72	9:02 a.m.	11:25 a.m.	72
		Stack	6-2	8-11-72	9:02 a.m.	11:25 a.m.	72
		Stack	7-2A	8-11-72	1:24 p.m.	1:25 p.m.	1
		Inlet	8-1	8-11-72	2:06 p.m.	3:54 p.m.	72
		Stack	8-2	8-11-72	2:06 p.m.	3:54 p.m.	72
Neodesha/D+HM	Fisher-Klosterman (pilot scale add-on)	Inlet	5-IA	8-23-72	12:55 p.m.	1:20 p.m.	25
		Outlet	5-OA	8-23-72	12:52 p.m.	1:17 p.m.	25
		Inlet	6-I	8-23-72	2:30 p.m.	4:00 p.m.	60
		Outlet	6-O	8-23-72	2:30 p.m.	4:00 p.m.	60
Grand Island/Dryer	Heil System (full scale)	Outlet	1-O	8-31-72	12:31 p.m.	3:25 p.m.	72
		Outlet[a]	2-O	9-01-72	11:34 p.m.	1:28 p.m.	96
		Outlet	3-O	9-01-72	4:43 p.m.	5:19 p.m.	36
		Recycle to Furnace	3-R	9-01-72	4:50 p.m.	5:18 p.m.	28
Oxford/Dryer	Koch (full scale add-on)	Inlet	1-I	9-07-72	1:45 p.m.	4:06 p.m.	80
		Outlet	1-O	9-07-72	1:15 p.m.	5:11 p.m.	180
		Inlet	2-IA	9-07-72	5:37 p.m.	5:52 p.m.	15
		Outlet	2-OA	9-07-72	5:48 p.m.	6:18 p.m.	30
		Inlet	3-I	9-08-72	2:17 p.m.	4:35 p.m.	80
		Outlet	3-O	9-08-72	1:35 p.m.	5:15 p.m.	180

TABLE 21 (Continued)

Plant/Source Operation	Control Device/ System	Sampling Location	Test Number	Date	Time Start	Time Finish	Sampling Duration (min)
Grand Island/Dryer	Heil System (full scale)	Outlet[a]	4-0	9-12-72	3:25 p.m.	5:06 p.m.	72
		Outlet[a]	5-0	9-13-72	12:50 p.m.	4:36 p.m.	72
		Outlet	6-0A	9-13-72	3:30 p.m.	3:39 p.m.	9
		Outlet	7-0	9-14-72	1:48 p.m.	3:56 p.m.	72
		Recycle to Furnace	7-R	9-14-72	1:48 p.m.	3:56 p.m.	64
		Outlet	8-0A	9-14-72	5:20 p.m.	5:29 p.m.	9
		Recycle to Furnace	8-RA	9-14-72	5:05 p.m.	5:13 p.m.	8
		Outlet	9-0	9-15-72	11:35 a.m.	1:08 p.m.	72
		Recycle to Furnace	9-R	9-15-72	11:35 a.m.	1:03 p.m.	64
Topeka/Total	Thompson System (full scale)	Inlet	9-1	9-19-72	2:36 p.m.	5:36 p.m.	72
		Stack	9-2	9-19-72	2:36 p.m.	5:36 p.m.	72
		Inlet	10-1	9-20-72	11:00 a.m.	12:51 p.m.	72
		Stack	10-2	9-20-72	11:00 a.m.	12:51 p.m.	72
		Inlet[a]	11-1	9-20-72	3:22 p.m.	4:59 p.m.	72
		Stack[a]	11-2	9-20-72	3:22 p.m.	4:59 p.m.	72
		Stack	12-2	9-21-72	1:45 p.m.	3:36 p.m.	72
		Recycle to Primary Cyclone	12-6	9-21-72	1:53 p.m.	3:28 p.m.	48
		Recycle to Furnace	12-8	9-21-72	1:53 p.m.	3:30 p.m.	48
		Downstream - 2nd Venturi	13-5A	9-21-72	4:54 p.m.	5:00 p.m.	7
Neodesha/D+HM	APPCOR (pilot scale add-on)	Inlet	1A-IA	9-27-72	2:39 p.m.	3:06 p.m.	16
		Outlet	1A-0A	9-27-72	2:35 p.m.	3:10 p.m.	24
		Inlet	2A-I	9-27-72	4:23 p.m.	5:50 p.m.	48
		Outlet	2A-0	9-27-72	4:23 p.m.	5:50 p.m.	48
		Inlet	3A-I	9-28-72	10:18 a.m.	11:28 a.m.	48
		Outlet	3A-0	9-28-72	10:18 a.m.	11:28 a.m.	48
		Inlet	4A-I	9-28-72	1:57 p.m.	4:26 p.m.	48
		Outlet	4A-0	9-28-72	1:57 p.m.	4:26 p.m.	48
Lexington	Air Conditioning Corp. (full scale add-on)	Inlet	1-IA	10-04-72	3:50 p.m.	4:10 p.m.	20
		Outlet	1-0A	10-04-72	3:06 p.m.	3:46 p.m.	40
		Inlet	2-I	10-04-72	5:30 p.m.	7:13 p.m.	60
		Outlet	2-0	10-04-72	5:31 p.m.	7:09 p.m.	64
		Inlet	3-I	10-05-72	10:13 a.m.	11:25 p.m.	48
		Outlet	3-0	10-05-72	10:14 a.m.	11:30 p.m.	65
		Inlet	4-I	10-05-72	1:30 p.m.	3:54 p.m.	48
		Outlet	4-0	10-05-72	1:32 p.m.	3:58 p.m.	64
Rozel/Dryer	Koch (full scale add-on)	Inlet	1-I	10-11-72	1:30 p.m.	3:42 p.m.	60
		Outlet	1-0	10-11-72	1:30 p.m.	3:35 p.m.	60
		Inlet	2-I	10-11-72	5:45 p.m.	7:12 p.m.	60
		Outlet	2-0	10-11-72	5:45 p.m.	7:12 p.m.	60
		Inlet	3-IA	10-12-72	10:05 p.m.	10:30 p.m.	24
		Outlet	3-0A	10-12-72	9:55 a.m.	10:45 p.m.	50
		Inlet	4-I	10-12-72	2:25 p.m.	3:55 p.m.	60
		Outlet	4-0	10-12-72	2:25 p.m.	3:55 p.m.	60
		Inlet[b]	5-IA	10-13-72	11:45 a.m.	12:15 p.m.	30
		Inlet[b]	6-I	10-13-72	3:30 p.m.	4:42 p.m.	60

a/ Without recycle.
b/ Unit disconnected.

TABLE 21 (Continued)

Plant/Source Operation	Control Device/ System	Sampling Location	Test Number	Date	Time Start	Time Finish	Sampling Duration (min.)
Abilene/D+HM+PM	Plant Modifications	Silo Outlet	101	6-15-73	10:50 a.m.	12:20 p.m.	48
			102	6-18-73	11:00 a.m.	12:30 p.m.	48
			103	6-18-73	6:30 p.m.	7:40 p.m.	48
			114	7-10-73	2:54 p.m.	4:35 p.m.	64
			115	7-11-73	10:52 a.m.	12:26 p.m.	64
			116	7-11-73	2:45 p.m.	3:57 p.m.	64
		HM+PM Line to Silo	117	7-12-73	11:40 a.m.	12:37 p.m.	48
			118	7-12-73	3:00 p.m.	4:14 p.m.	48
			119	7-13-73	10:15 p.m.	11:31 p.m.	64
			141	9-4-73	2:20 p.m.	4:19 p.m.	64
			142	9-4-73	5:28 p.m.	7:22 p.m.	64
			143	9-6-73	1:22 p.m.	3:06 p.m.	64
			144	9-7-73	10:08 a.m.	11:29 p.m.	64
			145	9-7-73	2:04 p.m.	3:28 p.m.	64
Oxford/D	Koch (Full Scale add-on)	Outlet	104	6-20-73	9:55 a.m.	1:00 p.m.	144.8
			105	6-20-73	4:20 p.m.	7:30 p.m.	160.0
Lawrence/D+HM	None	Stack to ATM	109	7-5-73	2:00 p.m.	4:00 p.m.	72.0
	None	" " "	110	7-6-73	9:47 a.m.	11:21 a.m.	72.0
	None	" " "	111	7-6-73	1:56 p.m.	3:23 p.m.	72.0
	Koch (Full Scale)	Outlet	112	7-9-73	10:45 a.m.	12:06 p.m.	72.0
	" " "	"	113	7-9-73	2:45 p.m.	4:18 p.m.	72.0
	None	Stack to ATM	130	8-6-73	4:13 p.m.	5:42 p.m.	72.0
	Koch (Full Scale)	Outlet	131	8-7-73	12:45 p.m.	2:07 p.m.	72.0
	" " "	"	132	8-7-73	3:15 p.m.	4:35 p.m.	72.0
	" " "	"	146	9-10-73	4:20 p.m.	6:30 p.m.	72.0
	" " "	"	147	9-11-73	3:12 p.m.	4:57 p.m.	72.0
	None	Stack to ATM	148	9-11-73	6:06 p.m.	8:15 p.m.	69.0
Dundee/D	Heil System (Full Scale)	Outlet	136	8-28-73	3:12 p.m.	5:19 p.m.	72.0
		"	137	8-29-73	11:39 p.m.	1:15 p.m.	72.0
		"	138	8-29-73	3:39 p.m.	4:15 p.m.	36.0
		"	139	8-30-73	5:45 p.m.	7:23 p.m.	72.0
		"	140	8-31-73	1:42 p.m.	3:15 p.m.	72.0

TABLE 21 (Concluded)

Plant/Source Operation	Control Device/ System	Sampling Location	Test Number	Date	Time Start	Time Finish	Sampling Duration (min)
Neodesha/D+HM	Plant Modifications	Stack to ATM	123	7-31-73	11:35 a.m.	12:15 p.m.	72.0
			124	7-31-73	4:27 p.m.	5:57 p.m.	72.0
			125	8-1-73	3:27 p.m.	4:57 p.m.	72.0
			126	8-1-73	6:41 p.m.	8:00 p.m.	72.0
			127	8-2-73	11:18 a.m.	12:42 p.m.	72.0
			128	8-2-73	3:00 p.m.	4:30 p.m.	72.0
			129	8-3-73	10:45 a.m.	12:18 p.m.	72.0
St. Marys/D+HM+PM	Thompson System	Outlet	120	7-16-73	2:31 p.m.	3:58 p.m.	72.0
			121	7-27-73	12:00 a.m.	1:15 p.m.	72.0
			122	7-27-73	3:15 p.m.	4:15 p.m.	72.0

TABLE 22

PERFORMANCE AND PROCESS DATA CALCULATION FACTORS

	Value Determined	Units	Factors in Calculation
Dryer Conditions	Process weight rate	lb/hr	Production rate, green chop moisture, pellet moisture
	Back-end temperature	°F	Average dryer outlet temperature
	Excess air	%	Carrier gas composition (dry basis)
	Evaporation rate	lb/hr	Process weight rate, green and dry chop moisture
	Fuel rate	scfh	Meter readings, elapsed time, average meter pressure and temperature
Carrier Gas Conditions	Temperature	°F	Average carrier gas temperature
	Moisture	% by vol.	Moisture condensate, volume of carrier gas sampled
	Average velocity	fpm	Average velocity head, temperature, pressure, and composition of carrier gas
	Flow rate	acfm	Average velocity, cross-sectional area
		dscfm	Flow rate (acfm), temperature, pressure, and composition of carrier gas
	Particulate loading	gr/acf	Particulate weight, volume of carrier gas sampled
		gr/dscf	Particulate loading (gr/acf), temperature, pressure, and composition of carrier gas
Control Performance	Pellet production rate	tons/hr	Number of scale dumps, elapsed time
	Moisture flow	lb/hr	Flow rate, temperature, pressure, and moisture content of carrier gas
	Pressure drop	in. H_2O	Carrier gas pressures (inlet and outlet)
	Water usage rate	gpm	Water meter readings, elapsed time
	Average particle size	microns	Andersen graphs (50% of particulate weight less than average size)
	Particulate rate	lb/hr	Particulate loading, flow rate of carrier gas
	Collection efficiency	%	Particulate rates (inlet and outlet)

TABLE 23

Fisher-Klosterman
(Neodesha/D+HM)

FISHER-KLOSTERMAN/NEODESHA PERFORMANCE AND PROCESS DATA

DRYER CONDITIONS

Test	Process Weight Rate (lb/hr)	Protein (%)	Chop Moistures (%) Green	Chop Moistures (%) Dry	Back-End Temp. (°F)	Excess Air (%)	Evaporation Rate (lb/hr)
1	20,600	18.5	74.3[a]	10.8[a]	270	202	14,600
3	22,000	18.5	77.9[a]	11.1[a]	258	182	16,500
6	19,300	-	71.2	6.9	250	512	13,300

CARRIER GAS CONDITIONS

Test	Temp. (°F)	Moisture (% by Vol.)	Avg. Vel. (fpm)	Flow Rate (acfm)	Flow Rate (dscfm)	Particulate Loading (gr/acf)	Particulate Loading (gr/dscf)
1-I	208	32.7	1,734	859	441	0.0617	0.1204
1-O	164	31.7	1,205	589	333	0.0549	0.0972
3-I	206	37.3	1,517	731	362	0.0818	0.1699
3-O	166	31.0	1,304	639	364	0.0561	0.0985
6-I	182	24.1	1,366	672	407	0.0497	0.0822
6-O	217	16.4	1,525	750	491	0.0183	0.0280

CONTROL PERFORMANCE

Test	Pellet Prod. Rate (tons/hr)	Moisture Flow (lb/hr)	Pressure Drop (in. H_2O)	Water Usage (gpm)	Avg. Particle Size (μ)	Particulate Rate (lb/hr)	Collection Efficiency (%)
1-I	2.85	605	12	4.4	< 1	0.45	37.8
1-O		430			-	0.28	
3-I	2.62	608	11.7	3.1	< 1	0.53	41.5
3-O		458			-	0.31	
6-I	3.00	361	9.5	3.7	< 1	0.29	58.6
6-O		269			-	0.12	

a/ Laboratory result.

TABLE 24

APPCOR
(Neodesha/D+HM)

APPCOR/NEODESHA PERFORMANCE AND PROCESS DATA

DRYER CONDITIONS

Test	Process Weight Rate (lb/hr)	Protein (%)	Chop Moistures (%) Green	Chop Moistures (%) Dry	Back-End Temp. (°F)	Excess Air (%)	Evaporation Rate (lb/hr)
2	22,700	21.8	76.8[a]	6.5[a]	275	-	17,100
3	16,800	18.9	77.3[a]	4.0[a]	290	353	12,900
4	16,100	19.9	73.8[a]	5.2[a]	285	-	11,600

CARRIER GAS CONDITIONS

Test	Temp. (°F)	Moisture (% by Vol.)	Avg. Vel. (fpm)	Flow Rate (acfm)	Flow Rate (dscfm)	Particulate Loading (gr/acf)	Particulate Loading (gr/dscf)
2-I	216	32.1	4,410	2,230	1,160	0.0943	0.1821
2-O	154	33.1	4,500	2,270	1,260	0.0389	0.0705
3-I	193	32.0	3,980	2,010	[illegible],080	0.1209	0.2265
3-O	153	32.2	3,960	2,000	1,120	0.0385	0.0692
4-I	218	32.9	4,160	2,100	1,060	0.1732	0.3430
4-O	155	33.2	4,000	2,020	1,100	0.0606	0.1110

CONTROL PERFORMANCE

Test	Pellet Prod. Rate (tons/hr)	Moisture Flow (lb/hr)	Pressure Drop (in. H_2O)	Water Usage (gpm)	Avg. Particle Size (μ)	Particulate Rate (lb/hr)	Collection Efficiency (%)
2-I	2.75	1,540	7.9	6[b]	11.0	1.80	57.8
2-O		1,740			< 1	0.76	
3-I	1.95	1,430	7.5	6[b]	-	2.09	68.4
3-O		1,480			-	0.66	
4-I	2.15	1,470	7.5	6[b]	-	3.12	66.3
4-O		1,530			-	1.05	

a/ Laboratory results.

b/ Estimated value.

TABLE 25

Koch
(Oxford/Dryer)

KOCH/OXFORD PERFORMANCE AND PROCESS DATA

DRYER CONDITIONS

Test	Process Weight Rate (lb/hr)	Protein (%)	Chop Moistures (%) Green	Chop Moistures (%) Dry	Back-End Temp. (°F)	Excess Air (%)	Evaporation Rate (lb/hr)
1	19,200	20.9	80.3 a/	8.4 a/	229	313	15,100
3	14,500	18.3	81.0 a/	7.4 a/	232	193	11,500

CARRIER GAS CONDITIONS

Test	Temp. (°F)	Moisture (% by Vol.)	Avg. Vel. (fpm)	Flow Rate (acfm)	Flow Rate (dscfm)	Particulate Loading (gr/acf)	Particulate Loading (gr/dscf)
1-I	207	44.8	2,516	19,300	8,120	0.0780	0.1854
1-O	160	35.1	221	17,000	8,980	0.0337	0.0637
3-I	219	41.8	2,458	18,600	8,340	0.0673	0.1523
3-O	158	33.7	219	16,700	9,210	0.0360	0.0654

CONTROL PERFORMANCE

Test	Pellet Prod. Rate (tons/hr)	Moisture Flow (lb/hr)	Pressure Drop (in. H_2O)	Water Usage (gpm)	Avg. Particle Size (μ)	Particulate Rate (lb/hr)	Collection Efficiency (%)
1-I	2.07	18,400	2.8	125 b/	6.0	12.9	62.0
1-O		13,600			< 1	4.9	
3-I	1.49	16,700	2.9	125 b/	-	10.9	52.6
3-O		13,100			-	5.2	

a/ Laboratory result.
b/ Estimated recirculation rate; estimated make-up rate = 2 gpm.

TABLE 26

Koch
(Rozel/Dryer)

KOCH/ROZEL PERFORMANCE AND PROCESS DATA

DRYER CONDITIONS

Test	Process Weight Rate (lb/hr)	Protein (%)	Chop Moistures (%) Green	Chop Moistures (%) Dry	Back-End Temp. (°F)	Excess Air (%)	Evaporation Rate (lb/hr)
1	29,400	18.3	74.6[b]	6.1[b]	301	306	21,500
2	29,400	-	71.9	4.6[b]	316	90	20,700
4	27,400	20.1	76.4[b]	8.2[b]	280	152	20,400
6[a]	19,600	18.6	59.3[b]	8.1[b]	326	907	10,900

CARRIER GAS CONDITIONS

Test	Temp. (°F)	Moisture (% by Vol.)	Avg. Vel. (fpm)	Flow Rate (acfm)	Flow Rate (dscfm)	Particulate Loading (gr/acf)	Particulate Loading (gr/dscf)
1-I	225	45.7	4,443	32,100	12,400	0.0896	0.256
1-O	158	45.0	4,163	29,500	13,000	0.0866	0.196
2-I	242	47.0	4,587	33,100	12,200	0.1075	0.293
2-O	150	47.3	4,132	29,300	12,600	0.0932	0.218
4-I	210	39.6	4,746	34,300	15,000	0.0674	0.154
4-O	147	41.1	4,166	29,500	14,200	0.0495	0.103
6-I[a]	226	17.1	5,843	42,600	24,800	0.0370	0.059

Koch
(Rozel/Dryer)

TABLE 26 (Concluded)

CONTROL PERFORMANCE

Test	Pellet Prod. Rate (tons/hr)	Moisture Flow (lb/hr)	Pressure Drop (in. H_2O)	Water Usage (gpm)	Avg. Particle Size (μ)	Particulate Rate (lb/hr)	Collection Efficiency (%)
1-I	3.94	29,100	6d/	175c/	-	27.1	19.2
1-O		29,800			-	21.9	
2-I	4.31	30,100	6d/	175c/	-	30.5	23.3
2-O		31,500			-	23.4	
4-I	3.46	27,500	6d/	175c/	< 1	19.8	36.9
4-O		27,700			< 1	12.5	
6-Ia/	4.22	14,300	6d/	175c/	2.8	13.2	

a/ Koch unit disconnected.
b/ Laboratory result.
c/ Estimated recirculation rate; estimated make-up rate = 2.5 gpm.
d/ Estimated value.

TABLE 27

Air Conditioning Corporation
(Lexington/D+)

ACC/LEXINGTON PERFORMANCE AND PROCESS DATA

DRYER CONDITIONS

Test	Process Weight Rate (lb/hr)	Protein (%)	Chop Moistures (%) Green	Chop Moistures (%) Dry	Back-End Temp. (°F)	Excess Air (%)	Evaporation Rate (lb/hr)
2	19,200	24.3	76.3a/	5.7a/	290b/	229	14,400
3	22,500	24.5	82.3a/	7.2a/	290b/	229	18,200
4	22,500	24.5	82.3a/	7.2a/	290b/	229	18,200

CARRIER GAS CONDITIONS

Test	Temp. (°F)	Moisture (% by Vol.)	Avg. Vel. (fpm)	Flow Rate (acfm)	Flow Rate (dscfm)	Particulate Loading (gr/acf)	Particulate Loading (gr/dscf)
2-I	246	37.2	4,382	29,300	14,600	0.1434	0.2877
2-O	118	13.8	3,914	26,500	22,000	0.0431	0.0519
3-I	236	26.2	4,821	32,200	19,100	0.0926	0.1570
3-O	103	9.4	3,091	20,900	18,700	0.0372	0.0418
4-I	232	30.6	4,918	32,900	18,300	0.1331	0.2388
4-O	108	6.7	2,962	20,100	18,300	0.0185	0.0203

CONTROL PERFORMANCE

Test	Pellet Prod. Rate (tons/hr)	Moisture Flow (lb/hr)	Pressure Drop (in. H_2O)	Water Usage (gpm)	Avg. Particle Size (μ)	Particulate Rate (lb/hr)	Collection Efficiency (%)
2-I	2.35	24,200	3	405b/	4.8	36.0	72.8
2-O		9,860		405b/	< 1	9.8	
3-I	1.95	18,800	3	405b/	-	25.6	73.8
3-O		5,420		405b/	-	6.7	
4-I	2.15	22,600	3	405b/	-	37.5	91.5
4-O		3,670		405b/	-	3.2	

a/ Laboratory result.
b/ Estimated value.

TABLE 28

Thompson
(Topeka/Total)

THOMPSON/TOPEKA PERFORMANCE AND PROCESS DATA

DRYER CONDITIONS

Test	Process Weight Rate (lb/hr)	Protein (%)	Chop Moistures (%) Green	Chop Moistures (%) Dry	Back-End Temp. (°F)	Excess Air (%)	Evaporation Rate (lb/hr)
1	24,300	17.0	73.0	4.8[b]	280[c]	224	17,400 *
3	32,800	16.5	73.0	8.5[b]	275	189	23,100
5	35,500	-	76.0	8.9[b]	278	165	22,350 *
6	36,500	18.5	76.6	9.4[b]	279	165	27,100
8	33,200	18.6	76.0	4.3[b]	294	132	25,870 *
9	32,800	19.3	77.7	8.3[b]	310	216	21,170 *
10	31,800	21.6	78.5[b]	5.8[b]	320	183	22,640 *
11[a]	33,700	21.4	76.2[b]	5.8[b]	325	240	25,200
12	20,800	20.0	74.9[b]	7.2[b]	330	271	12,840 *

* These evaporation rates do not reflect the moisture which was added at the Feeder. The amount of water added at the Feeder and subsequently evaporated in the dryer is shown on page 71 (Table 22).

Thompson
(Topeka/Total)

TABLE 28 (Continued)

CARRIER GAS CONDITIONS

Test	Sampling Location	Temp. (°F)	Moisture (% by Vol.)	Avg. Vel. (fpm)	Flow Rate (acfm)	Flow Rate (dscfm)	Particulate Loading (gr/acf)	Particulate Loading (gr/dscf)
1-1	Inlet	213	43.0	5,645	44,500	19,100	0.136	0.318
1-2	Stack	209	34.1	3,071	32,000[c]	12,300	0.114	0.225
3-1	Inlet	224	38.7	5,565	43,800	19,900	0.328	0.722
3-2	Stack	206	42.9	3,694	29,100	12,800	0.470	1.066
5-6	Recycle to: Primary cyclone	211	40.6	7,121	3,150	1,430	0.681	1.499
5-7	Drum	199	42.2	2,139	2,620	1,190	0.448	0.990
5-8	Furnace	188	41.8	3,547	6,470	3,220	0.314	0.681
6-1	Inlet	222	43.1	5,430	42,800	18,100	0.278	0.657
6-2	Stack	213	28.9	4,128	32,500	17,700	0.299	0.549
8-1	Inlet	223	45.3	5,323	41,900	17,100	0.211	0.519
8-2	Stack	204	44.7	4,619	36,400	15,600	0.157	0.336
9-1	Inlet	223	42.8	5,181	40,800	17,500	0.166	0.372
9-2	Stack	215	41.5	4,528	35,700	16,100	0.082	0.183
10-1	Inlet	223	42.2	5,221	41,100	17,800	0.101	0.235
10-2	Stack	209	41.1	4,591	36,200	16,500	0.068	0.149
11-1[a]	Inlet	226	37.2	5,235	41,200	19,200	0.148	0.319
11-2[a]	Stack	228	36.0	5,352	42,200	20,200	0.137	0.284
12-2	Stack	229	38.3	4,420	34,800	16,100	0.066	0.142
12-6	Recycle to: Primary cyclone	236	38.8	6,130	2,700	1,220	0.135	0.299
12-8	Furnace	245	37.3	2,540	5,000	2,290	0.052	0.113

Thompson
(Topeka/Total)

TABLE 28 (Concluded)

CONTROL PERFORMANCE

Test	Pellet Prod. Rate (tons/hr)	Moisture Flow (lb/hr)	Water Usage (gpm) Feeder	Water Usage (gpm) Venturi	Average Particle Size (μ)	Particulate Rate (lb/hr)
1-1	3.45	40,200	d/	0	-	50.2
1-2		23,500			-	33.5
3-1	4.63	35,100	0	0	-	123.0
3-2		27,000			7.1	117.0
5-6	4.48	2,730	4.8	0	-	18.4
5-7		2,420			-	10.1
5-8		6,470			-	18.8
6-1	4.43	38,400	0	0	-	102.0
6-2		20,100			-	83.2
8-1	4.18	39,500	12.0	1.9 e/	-	75.7
8-2		35,300			-	48.9
9-1	3.85	36,500	2.4	2 e/	-	55.6
9-2		31,800			-	25.1
10-1	3.65	36,300	5.4	2 e/	-	35.8
10-2		32,200			-	21.1
11-1 a/	4.25	31,800	0	0	-	52.4
11-2 a/		31,800			-	49.3
12-2	2.76	27,900	5.8	2 e/	-	19.5
12-6		2,160			-	3.1
12-8		3,800			-	2.2

a/ Without recycle
b/ Laboratory result
c/ Estimated value.
d/ Volume of water not measured.
e/ Volume estimated

TABLE 29

Heil
(Grand Island/Dryer)

HEIL/GRAND ISLAND PERFORMANCE AND PROCESS DATA

DRYER CONDITIONS

Test	Process Weight Rate (lb/hr)	Protein (%)	Chop Moistures (%) Green	Chop Moistures (%) Dry	Back-End Temp. (°F)	Fuel Rate (scfh)	Excess Air (%)	Evaporation Rate (lb/hr)
1	38,100	19.1	74.0	13.2	290	43,900	-	26,700
2[a]	35,800	19.0[b]	74.7	11.5	278	52,100	268	25,600
3	35,800	18.8	74.7	11.5	295	-	-	25,600
4[a]	39,600	-	74.2	8.8	-	34,800[c]	168	28,400
5[a]	42,200	-	74.0	10.6	-	51,000	103	29,900
7	35,500	-	73.1	8.3	-	44,500	84	25,100
9	40,600	-	74.6	6.8	-	48,000[b]	42	29,500

CARRIER GAS CONDITIONS

Test	Sampling Location	Temp. (°F)	Moisture (% by Vol.)	Avg. Vel. (fpm)	Flow Rate (acfm)	Flow Rate (dscfm)	Particulate Loading (gr/acf)	Particulate Loading (gr/dscf)
1-0	Outlet	225	50.9	1,609	31,000	11,000	0.105	0.297
2-0[a]	Outlet	225	39.9	2,838	54,800	23,800	0.122	0.281
3-0	Outlet	226	53.5	2,081	40,200	13,500	0.138	0.412
3-R	Recycle to: Furnace	238	54.5	3,400	21,500	6,930	0.543	1.683
4-0[a]	Outlet	231	37.5	2,416	46,600	22,400	0.283	0.589
5-0[a]	Outlet	214	42.9	2,523	48,700	21,100	0.304	0.703
7-0	Outlet	233	49.9	1,887	36,400	13,200	0.101	0.281
7-R	Recycle to: Furnace	254	50.1	3,335	21,000	7,350	0.125	0.359
9-0	Outlet	243	51.5	1,867	36,100	12,300	0.116	0.339
9-R	Recycle to: Furnace	239	51.8	3,330	21,000	7,160	0.218	0.639

a/ Without recycle.
b/ Estimated value.
c/ First half = 17,900 scfh; second half = 49,000 scfh.

Heil
(Grand Island/Dryer)

TABLE 29 (Concluded)

CONTROL PERFORMANCE

Test	Pellet Prod. Rate (tons/hr)	Moisture Flow (lb/hr)	Avg. Particle Size (μ)	Particulate Rate (lb/hr)
1-0	5.35	32,000	-	28.0
2-0[a]	4.83	44,200	-	57.4
3-0	4.83	43,400	-	47.7
3-R		23,200	-	99.9
4-0[a]	5.49	37,600	-	113.2
5-0[a]	5.93	44,300	3.0	127.1
7-0	5.22	36,600	-	31.6
7-R		20,600	-	22.6
9-0	5.65	36,500	< 1	35.7
9-R		21,500	7.7	39.2

TABLE 30

ABILENE PERFORMANCE AND PROCESS DATA

DRYER CONDITIONS AND PERFORMANCE DATA

Test	Process Weight Rate (lb/hr)	Pellets Production Rate (tons/hr)	Pellets Protein (%)	Chop Moistures (%) Green	Chop Moistures (%) Dry	Particulate Rate (lbs/hr)	Excess Air (%)	Evaporation Rate (lb/hr)
101	26,400	4.09	13.4	71.6	12.8	66.8	268.7	17,800
102	20,900	4.08	11.4	64.1	9.0	72.5	317.4	12,600
103	18,700	3.78	12.1	63.1	5.6	73.5	317.4	11,400
114	24,200	4.03	17.2	68.7	11.8	51.0	346.1	15,600
115	25,600	4.43	16.8	67.1	7.9	48.2	399.8	16,400
116	26,500	5.07	17.3	63.5	8.1	31.7	297.8	16,000
119	21,500	3.56	16.9	69.5	11.8	46.0	367.7	14,000
141	34,400	4.60	14.5	75.5	13.5	28.5	309.3	24,700
142	28,900	3.82	16.82	75.8	10.6	30.6	291.5	21,100
143	33,200	5.10	13.84	71.5	12.9	34.9	362.3	22,300
144	26,400	3.35	19.36	77.0	10.3	31.2	297.2	19,600
145	22,700	2.40	19.11	80.3	8.2	32.9	312.5	17,800

CARRIER GAS CONDITIONS

Test	Temp. (°F)	Moisture (% by Vol.)	Avg. Vel. (fpm)	Flow Rate (acfm)	Flow Rate (dscfm)	Particulate Loading (gr/acf)	Particulate Loading (gr/dscf)
101	186.4	36.7	5750	39,524	19,791	.197	.394
102	179.3	27.0	5713	39,274	22,941	.215	.369
103	193.7	27.8	5759	39,587	22,378	.217	.384
114	195.6	32.0	6131	42,143	22,205	.141	.268
115	206.7	33.8	5903	40,579	20,536	.138	.274
116	190.6	31.4	5849	40,203	21,527	.092	.172
119	179.4	29.3	6165	42,381	23,715	.127	.226
141	161.6	30.2	6472	45,747	26,094	.073	.127
142	161.0	33.4	6429	45,443	24,792	.079	.144
143	139.7	30.6	6276	44,364	26,126	.092	.156
144	169.2	31.1	6480	45,810	25,449	.079	.143
145	171.4	29.9	6367	45,012	25,345	.085	.151

TABLE 31

KOCH/OXFORD PERFORMANCE AND PROCESS DATA (1973)

DRYER CONDITIONS AND PERFORMANCE DATA

Test	Process Weight Rate (lb/hr)	Pellets		Chop Moistures (%)		Particulate Rate (lbs/hr)	Excess Air (%)	Evaporation Rate (lb/hr)
		Production Rate (tons/hr)	Protein (%)	Green	Dry			
104	20,800	2.83	18.4	75.0	9.8	9.2	319.8	15,100
105	23,300	3.17	18.5	75.0	9.2	11.4	282.4	16,900

CARRIER GAS CONDITIONS

Test	Temp. (°F)	Moisture (% by Vol.)	Avg. Vel. (fpm)	Flow Rate		Particulate Loading	
				(acfm)	(dscfm)	(gr/acf)	(gr/dscf)
104	152.0	28.1	453	34,687	20,926	.031	.051
105	149.7	32.5	445	34,111	19,390	.039	.069

TABLE 32

KOCH/LAWRENCE PERFORMANCE AND PROCESS DATA

DRYER CONDITIONS AND PERFORMANCE DATA

Test	Process Weight Rate (lb/hr)	Pellets Production Rate (tons/hr)	Pellets Protein (%)	Chop Moistures (%) Green	Chop Moistures (%) Dry	Particulate Rate (lbs/hr)	Excess Air (%)	Evaporation Rate (lb/hr)
109	23400	2.75	17.0	78.6	14.6	22.0	446.7	17500
110	23400	2.50	17.0	80.1	17.4	21.7	446.7	17800
111	21100	2.55	17.0	77.5	16.7	18.8	446.7	15400
112	24800	2.30	18.6	81.5	14.9	8.30	408.3	19400
113	17800	2.80	18.6	70 4	12.6	6.59	408.3	11800
130	19500	2.45	16.3	76.6	16.9	28.5	503.1	14000
131	20500	2.45	16.3	77.5	14.0	13.3	329.1	15100
132	20800	2.60	17.6	76.8	15.0	12.2	356.8	15200
146	18100	2.65	17.77	72.0	10.1	13.74	421.7	12500
147	20000	2.42	18.8	76.8	9.7	13.60	421.7	14800
148	18200	2.53	19.4	73.4	11.9	41.21	362.3	12700

CARRIER GAS CONDITIONS

Test	Temp. (°F)	Moisture (% by Vol.)	Avg. Vel. (fpm)	Flow Rate (acfm)	Flow Rate (dscfm)	Particulate Loading (gr/acf)	Particulate Loading (gr/dscf)
109	238.6	26.5	5513	38,969	20,974	.066	.122
110	238.3	36.3	5654	39,972	18,661	.063	.136
111	248.5	26.5	5635	39,834	21,123	.055	.104
112	154.0	34.9	4689	33,150	18,065	.029	.054
113	150.7	26.1	4770	33,718	20,932	.023	.037
130	242.1	26.6	5596	39,551	21,126	.084	.157
131	149.1	33.2	4491	31,740	17,807	.049	.087
132	144.6	31.3	4447	31,433	18,243	.045	.078
146	151.0	32.1	4289	30,317	17,367	.053	.092
147	156.1	34.8	4484	31,694	17,217	.050	.092
148	268.4	28.8	5625	39,760	19,926	.121	.241

TABLE 33

THOMPSON/ST. MARYS PERFORMANCE AND PROCESS DATA (1973)

DRYER CONDITIONS AND PERFORMANCE DATA

Test	Process Weight Rate (lb/hr)	Pellets		Chop Moistures (%)		Particulate Rate (lbs/hr)	Excess Air (%)	Evaporation Rate (lb/hr)
		Production Rate (tons/hr)	Protein (%)	Green	Dry			
120	30,000	3.90	21.5	76.0	4.2	14.7	203.9	22,400
121	34,100	3.90	20.7[a]	78.8	6.0	17.1	112.3	26,400
122	33,600	4.34	20.7[a]	76.0	5.5	24.5	205.3	25,100

CARRIER GAS CONDITIONS

Test	Temp. (°F)	Moisture (% by Vol.)	Avg. Vel. (fpm)	Flow Rate		Particulate Loading	
				(acfm)	(dscfm)	(gr/acf)	(gr/dscf)
120	103.2	44.2	3582	28,211	12,114	.061	.142
121	108.3	46.4	4170	32,843	13,774	.061	.145
122	109.3	44.7	3903	30,740	13,331	.093	.214

a/ Protein content of only one sample taken, during these two tests, by the plant operating personnel. The pellets which were loaded "on stream" into a rail car during the day of these two tests were reported to contain 17.2% protein.

TABLE 34

NEODESHA PERFORMANCE AND PROCESS DATA

DRYER CONDITIONS AND PERFORMANCE DATA

Test	Process Weight Rate (lb/hr)	Pellets Production Rate (tons/hr)	Pellets Protein (%)	Chop Moistures (%) Green	Chop Moistures (%) Dry	Particulate Rate (lbs/hr)	Excess Air (%)	Evaporation Rate (lb/hr)
123	26600	2.97	17.3	79.1	14.9	28.2	298.6	20100
124	24300	2.97	18.5	76.8	10.0	44.0	386.0	18000
125	23000	3.20	17.7	73.8	15.5	28.9	312.5	15900
126	19800	3.10	17.6	70.6	13.6	35.3	344.2	13100
127	21900	2.77	14.8	76.4	14.1	43.4	312.5	15900
128	19300	2.97	15.8	71.4	13.5	42.2	450.7	12900
129	15300	2.70	16.8	67.0	15.5	23.7	491.0	9300

CARRIER GAS CONDITIONS

Test	Temp. (°F)	Moisture (% by Vol.)	Avg. Vel. (fpm)	Flow Rate (acfm)	Flow Rate (dscfm)	Particulate Loading (gr/acf)	Particulate Loading (gr/dscf)
123	229.1	37.1	1911	37,204	17,541	.088	.187
124	224.0	32.1	2116	41,193	21,059	.125	.244
125	237.0	33.7	1951	37,990	18,661	.089	.181
126	236.9	31.9	1923	37,437	18,857	.110	.218
127	234.2	35.2	1931	37,604	18,158	.135	.279
128	238.3	28.5	1938	37,734	19,955	.130	.247
129	231.0	19.2	2113	41,153	24,926	.067	.111

TABLE 35

BERTHOUD PERFORMANCE AND PROCESS DATA

DRYER CONDITIONS AND PERFORMANCE DATA

Test	Process Weight Rate (lb/hr)	Pellets		Chop Moistures (%)		Particulate Rate (lbs/hr)	Excess Air (%)	Evaporation Rate (lb/hr)
		Production Rate (tons/hr)	Protein (%)	Green	Dry			
133	22,300	3.15	18.2	73.7	10.3	46.5	387.8	15,800
134	21,300	2.05	19.9	82.0	8.4	31.7	239.7	17,100
135	26,500	2.80	19.7	80.5	10.7	45.8	239.7	20,700

CARRIER GAS CONDITIONS

Test	Temp. (°F)	Moisture (% by Vol.)	Avg. Vel. (fpm)	Flow Rate		Particulate Loading	
				(acfm)	(dscfm)	(gr/acf)	(gr/dscf)
133	213.5	36.2	2222	33,408	14,241	.162	.381
134	225.5	37.7	2267	34,074	13,910	.108	.266
135	224.0	44.4	2312	34,753	12,691	.154	.422

TABLE 36

HEIL/DUNDEE PERFORMANCE AND PROCESS DATA (1973)

DRYER CONDITIONS AND PERFORMANCE DATA

Test	Process Weight Rate (lb/hr)	Pellets Production Rate (tons/hr)	Pellets Protein (%)	Chop Moistures (%) Green	Chop Moistures (%) Dry	Particulate Rate (lbs/hr)	Excess Air (%)	Evaporation Rate (lb/hr)
136	27900	5.62	14.3	63.0	7.0	12.8	171.2	16800
137	41600	6.50	18.3	72.2	11.0	6.65	110.2	28600
138	42700	6.53	15.7	72.2	11.0	10.8	68.2	29300
139	26800	4.45	13.85	70.0	11.5	6.17	159.4	17700
140	30900	4.75	14.5	71.5	9.6	9.28	84.8	21200

CARRIER GAS CONDITIONS

Test	Temp. (°F)	Moisture (% by Vol.)	Avg. Vel. (fpm)	Flow Rate (acfm)	Flow Rate (dscfm)	Particulate Loading (gr/acf)	Particulate Loading (gr/dscf)
136	205.4	44.7	1164	22,859	9,417	.066	.159
137	221.4	46.2	1433	28,130	11,020	.028	.070
138	209.3	54.3	1413	27,752	9,374	.046	.135
139	215.7	48.8	1314	25,797	9,651	.028	.075
140	214.7	50.6	1363	26,771	9,633	.040	.112

TABLE 37

DRYER SPECIFICATIONS

Plant	Code	Make of Dryer	Size	No. of Passes	Evaporative Capacity (lb/hr)
Rossville, Kansas	A[a/]	Jones	1040	1	18,000
Arlington, Nebraska	B[a/]	Heil	105	1	18,000
Darr, Nebraska	C[a/]	MEC	1242	3	30,000
Neodesha, Kansas	D[a/]	MEC	1040	3	20,000
Topeka, Kansas	E	Thompson	12 x 36	1	30,000
Grand Island, Nebraska	F	Heil	12 1/2 x 42	3	34,000
Oxford, Kansas	G	McGeehee	1034	1	12,000
Lexington, Nebraska	H	Thompson	12 x 36	1	30,000
Rozel, Kansas	I	Heil	105	3	18,000
Abilene, Kansas	J	MEC	1040	3	22,000
Oxford, Kansas	K	McGeehee	1034	1	12,000
Lawrence, Kansas	L	Heil	824	3	12,000
Dundee, Kansas	M	Heil	125-42	3	34,000
St. Marys, Kansas	N	Thompson	12 x 42	1	27,000
Berthoud, Colorado	O	MEC	1040	3	20,000

a/ Plants tested in 1971 study (Ref. 1).

TABLE 38

BAY AREA
PROCESS WEIGHT TABLE

MAXIMUM ALLOWABLE EMISSION RATE

Process Weight Rate		Rate of Emission	Process Weight Rate		Rate of Emission
lb/hr	tons/hr	lb/hr	lb/hr	tons/hr	lb/hr
100	0.05	0.551	16,000	8.00	16.5
200	0.10	0.877	18,000	9.00	17.9
400	0.20	1.40	20,000	10.	19.2
600	0.30	1.83	30,000	15.	25.2
800	0.40	2.22	40,000	20.	30.5
1,000	0.50	2.58	50,000	25.	35.4
1,500	0.75	3.38	60,000	30.	40.0
2,000	1.00	4.10	70,000	35.	41.3
2,500	1.25	4.76	80,000	40.	42.5
3,000	1.50	5.38	90,000	45.	43.6
3,500	1.75	5.96	100,000	50.	44.6
4,000	2.00	6.52	120,000	60.	46.3
5,000	2.50	7.58	140,000	70.	47.8
6,000	3.00	8.56	160,000	80.	49.0
7,000	3.50	9.49	200,000	100.	51.2
8,000	4.00	10.4	1,000,000	500.	69.0
9,000	4.50	11.2	2,000,000	1,000.	77.6
10,000	5.00	12.0	6,000,000	3,000.	92.7
12,000	6.00	13.6			

Interpolation of the data in Table 25 for other process weights shall be accomplished by use of the following equations:

Process weights $\leq$ 30 Ton/hr - $E=(4.1)\ (P^{0.67})$

Process weights $>$ 30 Ton/hr - $E = (55)\ (P^{0.11}) - 40$

Where: E = rate of emissions in lb/hr
P = process weight in Ton/hr

SECTION XI

ACKNOWLEDGEMENTS

The assistance of the Production Committee of the American Dehydrators Association in developing this project and evaluating the results is acknowledged, with sincere thanks. The Production Committee consisted of Mr. Ray Bert, Mr. Robert M. Bunten, Jr., Mr. James T. Healey, Mr. John Higgins, Mr. Warren Johnson, Mr. Llyle King, Mr. Henry Moeller, Mr. George Polony, Mr. C.A. Vinci, Mr. H. L. Wells, Mr. Alva Caple, Mr. Marvin Domina, Mr. Jerry Isaak, and Mr. Ray Lang.

The construction and operation of the Heil recycle system was performed by Mr. Don Kaminski, Mr. Gordon Lindl and Mr. Lowell Frank of The Heil Company; and Mr. Paul Newsome of Morrison & Quirk, Inc. The Construction and operation of the Thompson recycle system was performed by Messrs. Theodore and Stanley Thompson of the Thompson Dehydrating Co.

The installation and operation of the pilot and full size wet scrubbers was performed by Mr. Ray Bert, Bert & Wetta Sales, Inc.; Mr. Clifford Bossung, Dawson County Feed Products, Inc.; Mr. Hank Wells, Oxford Dehy Company; and Mr. C. A. Vinci, Western Alfalfa Corporation.

Analytical work and preparation of much of the material for this report was performed by a team from Midwest Research Institute under the direction of Dr. Chatten Cowherd, Jr., project leader. Mr. Nicholas Stich and Mr. Pat Shea shared the responsibilities of directing the MRI Field Crews in the performance testing of control equipment at the various plant sites and overseeing the monitoring of process operating conditions. Miss Christine Guenther performed the mathematical computations of test results. Mr. Paul Gorman conducted presurveys of the testing sites, and contributed to the evaluation of control equipment costs and performance data. Mr. Mike Hammons conducted the laboratory analyses of particulate samples.

Mr. Leslie Hardison, Air Resources, Inc., assisted in evaluating test data and provided some of the discussion in this report.

Mr. A. Lyle Livingston, USDA, ARS, WRRL, collected product samples and he and Dr. George Kohler provided the evaluation of the effect of "recycle" on the quality of dehydrated alfalfa.

Mr. Ray Buergin, Supervisor of Engineering and Enforcement, Kansas State Department of Health, made the original suggestion for demonstration of a recycle system which led to the development of this project.

The support of this project by the Environmental Protection Agency under Research Grant R801446, the assistance of Dr. Bill Garner in preparation of the grant application and the help provided by Dr. Robert Bethea, and Mr. Gil Haselberger, EPA Project Officers, in carrying out the project and preparing this report is acknowledged with sincere thanks.

SECTION XII

REFERENCES

1. Cowherd, Chatten, Jr., "Particulate Emissions and Process Conditions at Representative Alfalfa Dehydrating Mills," Final Report MRI Project No. 3538-C (for American Dehydrators Association), November 19, 1971.

2. Federal Register, Volume 36, Number 247, pp. 24876-24895, December 23, 1971

3. Cowherd, Chatten, Jr., and A. E. Vandegrift, "A Review of Source Testing Procedures," 21st Sanitary Engineering Conference, University of Kansas, January 1971.

4. Shigehara, R. T., W. F. Todd, and W. S. Smith, "Significance of Errors in Stack Sampling Measurements," Annual Meeting of the Air Pollution Control Association, St. Louis, Missouri, June 1970.

5. "Source Sampling," National Air Pollution Control Administration Training Manual. Research Triangle Park, North Carolina (available to Trainees attending source-sampling course).

6. Shannon, L. J., and P. G. Gorman, "Particulate Pollutant System Study: Volume II - Fine Particle Emissions," Final Report MRI Project No. 3326-C (for U. S. Environmental Protection Agency), August 1, 1971.

7. "Compilation of Air Pollutant Emission Factors," U. S. Environmental Protection Agency, Office of Air Programs Publication No. AP-42, February 1972.

TECHNICAL REPORT DATA
(Please read Instructions on the reverse before completing)

1. REPORT NO. EPA-650/2-74-007	2.	3. RECIPIENT'S ACCESSION NO.
4. TITLE AND SUBTITLE Particulate Emissions from Alfalfa Dehydrating Plants -- Control Costs and Effectiveness		5. REPORT DATE January 1974
		6. PERFORMING ORGANIZATION CODE
7. AUTHOR(S) Kenneth D. Smith		8. PERFORMING ORGANIZATION REPORT NO.
9. PERFORMING ORGANIZATION NAME AND ADDRESS American Dehydrators Association, 5800 Foxridge Drive, Mission, Kansas 66202		10. PROGRAM ELEMENT NO. 1AB012 (ROAP 21ADJ-83)
		11. CONTRACT/GRANT NO. Grant R 801446
12. SPONSORING AGENCY NAME AND ADDRESS EPA, Office of Research and Development, NERC-RTP, Control Systems Laboratory, Research Triangle Park, N.C. 27711		13. TYPE OF REPORT AND PERIOD COVERED Final--7/72-1/74
		14. SPONSORING AGENCY CODE
15. SUPPLEMENTARY NOTES		

16. ABSTRACT The report presents the results of an extensive field-testing program to characterize particulate emissions from alfalfa dehydrating plants and to evaluate the cost effectiveness of available control methods. Results of the first test phase (1971), performed under a variety of controlled conditions to characterize plant emissions from the various process operations, indicate that the drying operation is responsible for more than 75% of total emissions. Results of the second test phase (1972), with benchmark performance data obtained on two pilot-scale and three full-scale wet scrubbers and on two full-scale recycle systems, indicate that medium-efficiency wet scrubbers have the potential to bring alfalfa dryer emissions into compliance with process weight/rate standards. Results of the third phase (1973)--with full-scale control devices/systems tested to determine: the effectiveness and freedom from operating problems of an intermediate pressure drop scrubber and several recycle systems, and the effectiveness of plant modifications and operating procedures in reducing particulate emissions--indicate that dehydrating plants can be operated in compliance with emission standards by using appropriate plant modifications and operating methods. The report includes capital and operating expenses for the control schemes investigated, applied to a representative control model.

17. KEY WORDS AND DOCUMENT ANALYSIS

a. DESCRIPTORS	b. IDENTIFIERS/OPEN ENDED TERMS	c. COSATI Field/Group
Air Pollution	Air Pollution Control	13B
Scrubbers	Alfalfa	07A
Dehydration	Stationary Sources	14A
Field Tests	Particulate Emissions	
Cost Effectiveness	Emission Standards	
Capitalized Costs		
Operating Costs		

18. DISTRIBUTION STATEMENT Unlimited	19. SECURITY CLASS *(This Report)* Unclassified	21. NO. OF PAGES 122
	20. SECURITY CLASS *(This page)* Unclassified	22. PRICE

EPA Form 2220-1 (9-73)

☆ G. P. O. 1974 — 747-791 / 350, REGION NO. 4

ENVIRONMENTAL PROTECTION AGENCY
Technical Publications Branch
Office of Administration
Research Triangle Park, N.C. 27711

OFFICIAL BUSINESS

AN EQUAL OPPORTUNITY EMPLOYER

POSTAGE AND FEES PAID
ENVIRONMENTAL PROTECTION AGENCY
EPA - 335

U.S. MAIL

Return this sheet if you do NOT wish to receive this material or if change of address is needed (Indicate change, including ZIP code.)

Sec. #7