Sec. 4, Ref. 14

MOSTARDI-PLATT ASSOCIATES, INC.
Environmental Consultants
1077 Entry Drive
Bensenville, IL 60106
(708) 860-5900

Note: This is a reference cited in *AP 42, Compilation of Air Pollutant Emission Factors, Volume I Stationary Point and Area Sources.* AP42 is located on the EPA web site at www.epa.gov/ttn/chief/ap42/

The file name refers to the reference number, the AP42 chapter and section. The file name "ref02_c01s02.pdf" would mean the reference is from AP42 chapter 1 section 2. The reference may be from a previous version of the section and no longer cited. The primary source should always be checked.

0 2 1992

AP-42 Section 9.9.7
Reference 14
Report Sect.
Reference

PARTICULATE EMISSION STUDY
PERFORMED FOR
A.E. STALEY
AT THE
LOUDON TENNESSEE
STARCH SPRAY DRYER STACK
LOUDON, TENNESSEE
JULY 17, 1992

© Copyright 1992
All rights reserved in
Mostardi-Platt Associates, Inc.
1077 Entry Drive, Bensenville, IL 60106
(708) 860-5900

PROJECT NO: 21511
DATE SUBMITTED: AUGUST 12, 1992

MOSTARDI-PLATT ASSOCIATES, INC.

TABLE OF CONTENTS

	Page
CERTIFICATION SHEET	i
1.0 INTRODUCTION	1
2.0 SUMMARY OF RESULTS	1
3.0 DISCUSSION OF RESULTS	1
4.0 TEST PROCEDURES	1
4.1 Particulate Determination	2
5.0 QUALITY ASSURANCE PROCEDURES	2
6.0 ACKNOWLEDGMENTS	4
7.0 PARTICULATE TEST RESULTS SUMMARIES	5
APPENDIX	
Test Section Diagram	6
Sampling Train Diagrams	7
Plant Operating Information	9
Sample Analysis Data	12
Calculation Nomenclature and Formulae	13
Test Data and Results (Computerized)	15
Calibration Data	33
Field Data Sheets	38
Tennessee Sampling Observation Report Sheet	47

MOSTARDI-PLATT
ASSOCIATES, INC.

CERTIFICATION SHEET

Having supervised and worked on the test program described in this report, and having written this report, I hereby certify the data, information, and results in this report to be accurate and true according to the methods and procedures used.

MOSTARDI-PLATT ASSOCIATES, INC.

Edward Peterson /tsm

Edward Peterson
Project Supervisor

PARTICULATE EMISSION STUDY
Performed For
A.E STALEY
At The
Loudon Tennessee
Starch Spray Dryer Stack
Loudon, Tennessee
July 17, 1992

1.0 INTRODUCTION

A particulate emission test program was performed by MOSTARDI-PLATT ASSOCIATES, INC. (MPA) on the stack of the starch spray dryer at the A.E Staley Plant in Loudon Tennessee on July 17, 1992. The tests were authorized by and performed for A.E. Staley.

The tests were conducted by Mr. E. Peterson of MPA. Messrs. D. Byrer and J. Hoyt of A.E. Staley provided assistance and coordinated plant operating conditions during the test program. Mr. Darwin Claxton of the Tennessee Air Pollution Control Division witnessed the tests.

2.0 SUMMARY OF RESULTS

During this test program, three (3) particulate emission tests were performed at the stack of the starch spray dryer. The average particulate concentration was 0.0016 gr/acf and 0.0021 gr/dscf at an average gas volume of 166,354 acf at 171°F. The particulate emission rate was 2.2 lbs/hr. Complete test results are given on page four.

3.0 DISCUSSION OF RESULTS

No problems were encountered with the testing equipment during the course of the test program. Source operation appeared normal during the entire test program. Plant production information is given on pages nine to eleven.

4.0 TEST PROCEDURES

All testing, sampling, analytical and calibration procedures used for this test program were performed as described in the Code of Federal Regulations, Title 40, Part 60, Appendix A, Methods 1 through 5 and the latest revisions thereof. Where applicable, the Quality Assurance Handbook for Air Pollution Measurement Systems, Volume III, Stationary Source Specific Methods, EPA 600/4-77-027b was used to determine the precise procedures.

 © Mostardi-Platt Associates, Inc.

4.1 Particulate Determination

A total of 24 test points were sampled using 4 ports at the stack test location.

The particulate sampling train was manufactured by Nutech Corporation of Durham, North Carolina and meets all specifications required by Method 5. A stainless steel-lined probe was used. Drawings depicting the sampling ports, test point locations and sampling trains are appended to this report. Velocity pressures were determined simultaneously during sampling with a calibrated S-type pitot tube and inclined manometer. All temperatures were measured using K-type thermocouples with calibrated digital temperature indicators.

The filter media were Whatman 934-AH glass microfibre filters, exhibiting a 99.95% efficiency on 0.3 micron DOP smoke particles in accordance with ASTM Standard Method D-2986-71.

All sample recovery was performed at the test site by the test crew. All final particulate sample analyses were performed by MPA personnel at the MPA laboratory in Bensenville, Illinois. Copies of all sample analysis sheets, explanations of nomenclature and calculations, and raw field data sheets are appended to this report.

5.0 QUALITY ASSURANCE PROCEDURES

MPA recognizes the previously described reference methods to be very technique oriented and attempts to minimize all factors which can increase error by implementing its Quality Assurance Program into every segment of its testing activities.

Dry test meters and wet test meters were calibrated according to methods described in the Quality Assurance Handbook, Sections 3.3.2., 3.4.2 and 3.5.2. Percent error for the wet test meter according to the methods was less than the allowable error of 1.0 percent. The dry test meters measured the test sample volumes to within 2 percent at the flowrate and conditions encountered during sampling.

Calculations were performed by computer and an explanation of the nomenclature and calculations along with the complete test results are included in the appendix. Also appended are calibration data and copies of the raw field data sheets.

Raw data will be kept on file at the MPA offices in Bensenville, Illinois. All samples from this test program will be retained for 60 days after the submittal of the report, after which they will be discarded unless MPA is advised otherwise.

© Mostardi-Platt Associates, Inc.

6.0 ACKNOWLEDGMENTS

MOSTARDI-PLATT ASSOCIATES, INC. would like to thank all personnel involved in this project for their assistance in completing this test program, especially Messrs. D. Byrer and J. Hoyt of A.E. Staley.

Respectfully submitted,

MOSTARDI-PLATT ASSOCIATES, INC.

Edward Peterson /jlm

Edward Peterson
Project Supervisor

EP/blt/jlm

 © Mostardi-Platt Associates, Inc.

MOSTARDI-PLATT ASSOCIATES, INC.

7.0 PARTICULATE TEST RESULTS SUMMARIES

PARTICULATE TEST RESULTS SUMMARY				
Plant: A.E. Staley Manufacturing	**Source: Spray Dryer**			
Test Run Number	1	2	3	Average
Test Location	Stack			
Source Condition	Normal Operating Conditions			
Date	July 17, 1992			
Time	625-733	803-909	1000-1108	
Particulate Concentration:				
@ Flue Conditions, grains/acf	0.0023	0.0009	0.0015	0.0016
@ Standard Conditions, grains/dscf	0.0032	0.0012	0.0020	0.0021
Emission Rate:				
pounds/hour	3.1343	1.2929	2.0847	2.1706
Average Gas Volumetric Flow Rate:				
@ Flue Conditions, acfm	167,369	165,940	165,753	166,354
@ Standard Conditions, dscfm	122,690	122,030	120,523	121,748
Average Gas Temperature, °F	170.5	170.4	170.7	170.5
Average Gas Velocity, ft/sec	29.35	29.10	29.07	
Flue Gas Moisture, percent by volume	9.47	9.19	10.16	9.61
Average Flue Pressure, in. Hg	28.93	28.93	28.93	
Barometric Pressure, in. Hg	28.95	28.95	28.95	
Average $\%CO_2$ by volume, dry basis	0.40	0.40	0.50	0.43
Average $\%O_2$ by volume, dry basis	20.20	20.10	20.10	20.13
Dry Molecular Wt. of Gas, lb/lb-mole	28.872	28.868	28.884	
Gas Sample Volume, dscf	41.224	38.948	38.690	
Isokinetic Variance	1.08	1.02	1.03	

27,000 lb/hr = 13.5 T/hr

EF = 3.13/13.5 = 0.23 | 1.29/13.5 = 0.096 | 2.08/13.5 = 0.15 | 0.16

© Mostardi-Platt Associates, Inc.

APPENDIX

EQUAL AREA TRAVERSE FOR ROUND DUCTS

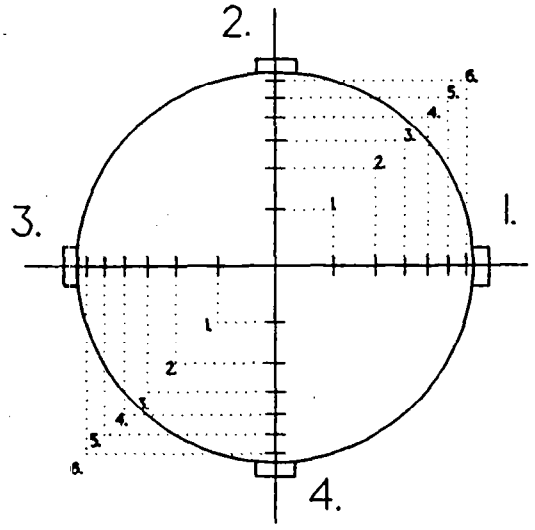

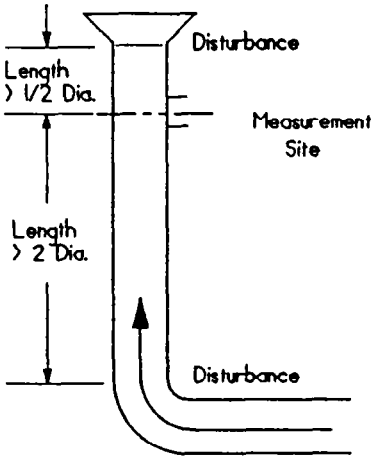

Percent of Stack Diameter From Inside Wall To Traverse Point:

1. 2.1
2. 6.7
3. 11.8
4. 17.7
5. 25.0
6. 35.6
7. 64.4
8. 75.0
9. 82.3
10. 88.2
11. 93.3
12. 97.9

Job: A. E. Staley
Loudon, TN

Date: July 17, 1992
Test No.: Particulate
Duct No.: Starch Spray Dryer
Duct Diameter: 11 Ft.
Duct Area: 95.03 Sq. Ft.

MOSTARDI-PLATT ASSOCIATES, INC.

Sampling Train For Integrated Gas Sampling

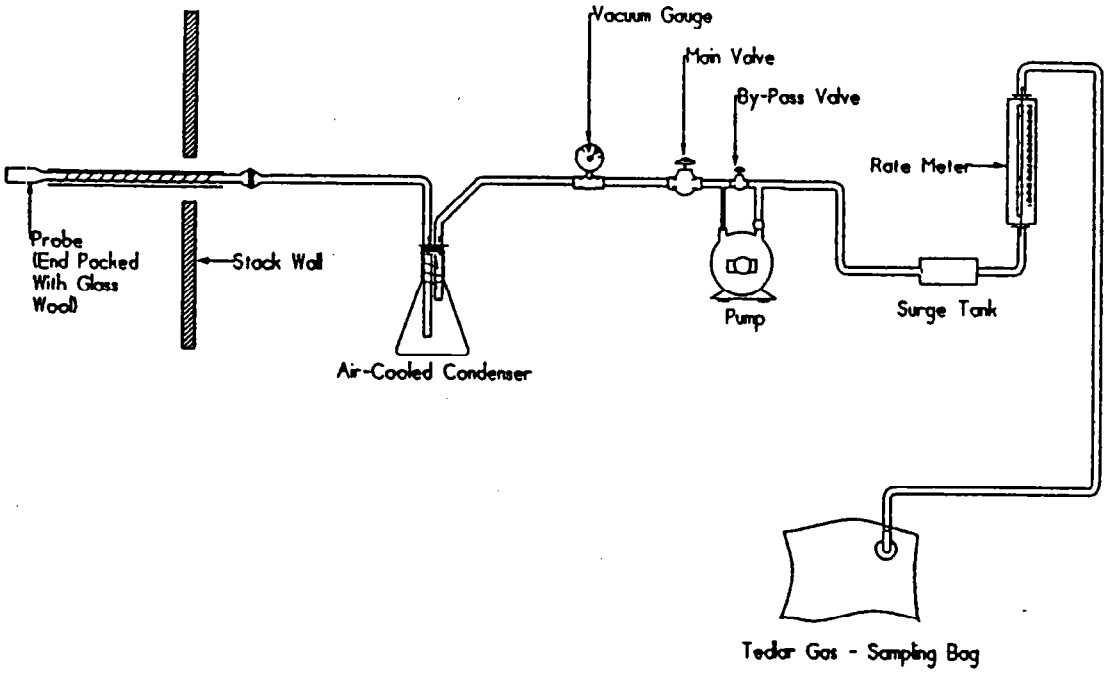

MOSTARDI-PLATT
ASSOCIATES, INC.

METHOD 3

Sampling Train for the Determination of Particulate Emissions From Stationary Sources

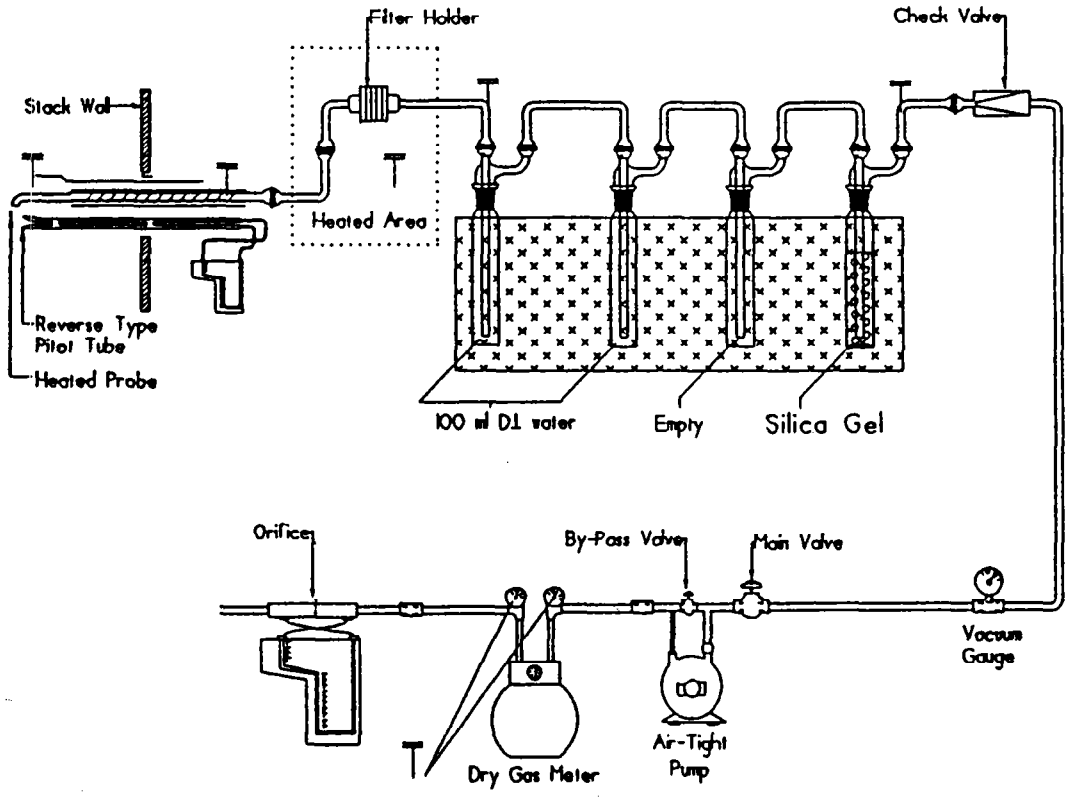

Ice Bath

Temperature Sensor

MOSTARDI-PLATT ASSOCIATES, INC.

METHOD 5

A.E. STALEY MANUFACTURING COMPANY 2200 E. ELDORADO STREET DECATUR, ILLINOIS 62525 TELEPHONE 217/423-4411

August 5, 1992

FEDERAL EXPRESS

Mostardi-Platt Associates, Inc.
1077 Entry Drive
Bensenville, IL 60106

Attention: Thomas D. Mostardi, P.E.

Reference: A. E. Staley Manufacturing Company
Starch Spray Dryer Stack Test - 7/17/92
Loudon, Tennessee Facility
TDEH Pmt. No. 931256P
Emission Source Reference No. 53-0081-90

Gentlemen:

Enclosed please find a screen printout from the Loudon spray dryer system process control videospec. This printout contains a trend of the dryer feed rate for the period of the above-referenced testing (e.g. 5:30 am - 11:30 am).

In addition to the dryer, dry material/product handling sources are aspirated to this stack and were operational during the test (i.e. product bins, filter receiver bin, rail-receiver bin, and the unloading receiver bin). Due to the insignificant contribution of the dry material/product handling sources to the stack versus the significant dryer exhaust contribution (3,500 ACFM versus 135,000 ACFM), videospec printouts were not provided for the dry material/product handling sources.

In conclusion, the attached trend indicates that the dryer feed rate averaged 47.13 gallons of starch slurry per minute which converts to about 27,000 lb/hr of wet feed input at about 15% dry solids.

27,000 x 0.15 = 4,050

If you have any questions or comments regarding this information, please contact me at (217) 421-2503.

Sincerely,

James A. Hoyt
Environmental Engineer

JAH/lt
097
Attachment

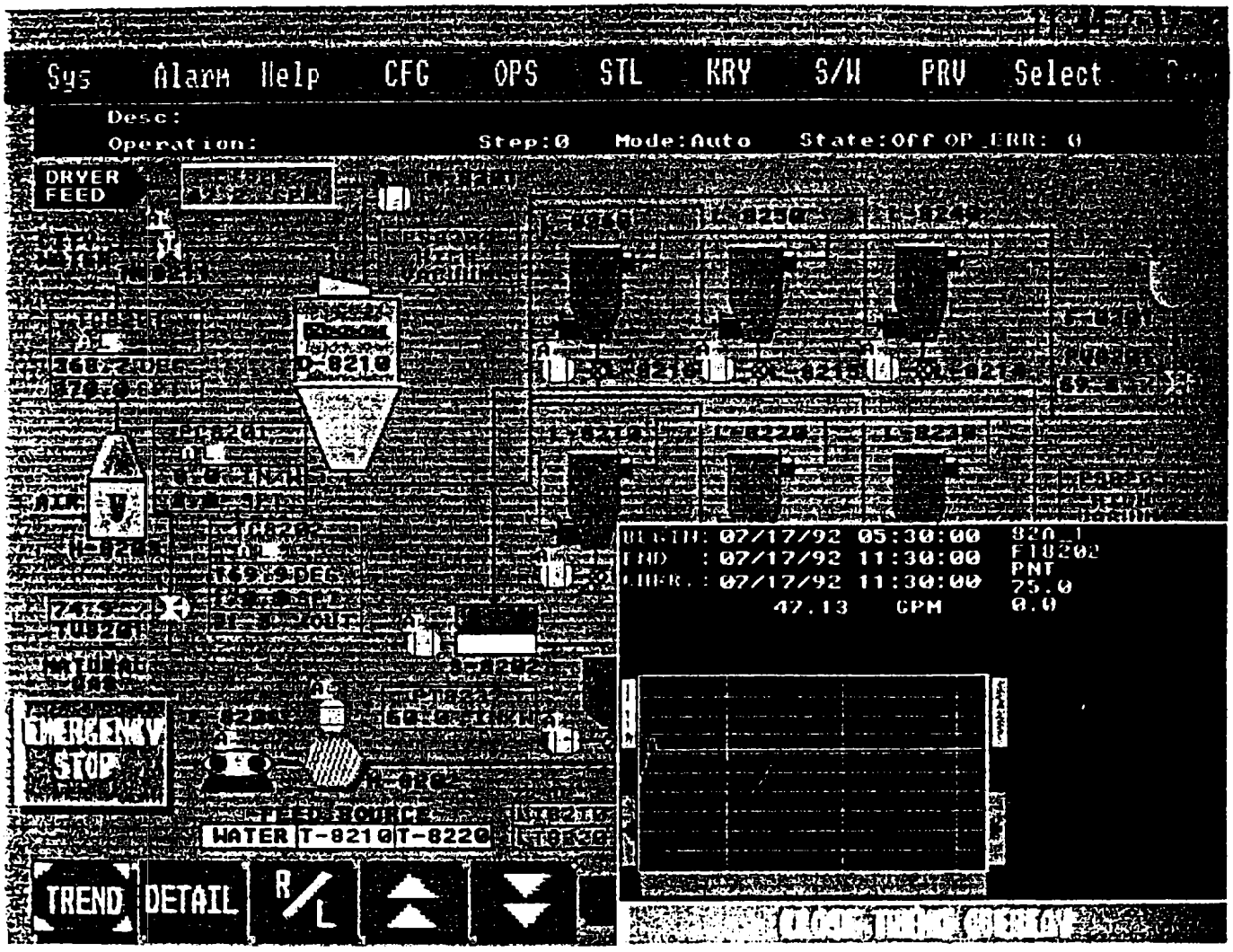
Sys
Alarm
Help
CFG
OPS
STL
KRY
S/W
PRV
Select
Desc:
Operation:
Step:0
Mode:Auto
State:Off
DRYER FEED
D-8210
EMERGENCY STOP
WATER
T-8210
T-8220
TREND
DETAIL
R/L
07/17/92 05:30:00
07/17/92 11:30:00
07/17/92 11:30:00
47.13
GPM
FI8202
PNT
75.0
0.0

Continued - page 2

It is important to reiterate that construction permit 931256P contains an error in Condition 2 regarding the allowed emission rate for product storage (90C and 90D). The permit condition states that particulate matter emissions from product storage shall not exceed 0.01 gr/ascf (.021 lb/hr). The construction permit application stated that emissions from product storage sources (90C and 90D) would not exceed 0.01 gr/scf at a combined 1200 scfm or 0.21 lbs/hr, and the emission calculations for these sources in the Division's Final Determination (see Attachment II) also reflected the corrected estimated emission rate. Staley requested that this "typo" be corrected in the operating permit.

In conclusion, Staley requests that construction permit 931258P be withdrawn. The HCl work tank with scrubber (source 53-0081-92) was deleted from construction plans and the existing permitted refinery HCl system is being utilized instead.

If you have any questions or comments regarding this submittal, please contact me at (217) 421-2503.

Sincerely,

James A. Hoyt

James A. Hoyt
Environmental Engineer

jm/attachments

permitting has third copy of report [illegible]

A.E. STALEY MANUFACTURING COMPANY 2200 E. ELDORADO STREET DECATUR, ILLINOIS 62525 TELEPHONE 217/423-4411

September 30, 1992

RECEIVED
DATE OCT 02 1992
CO. NO.
I. D. A 1 2 3 4 5 6
B 1 2 3 4 5
CS
OTHER

Federal Express

Tennessee Department of Environment
and Conservation
9th Floor - L & C Annex
403 Church Street
Nashville, TN 37243-1531

Attention: Dave Carson, Permits Section

Reference: A. E. Staley Manufacturing Company
Operating Permit Applications
Construction Permit Numbers 931256P, 931257P
Withdrawal Construction Permit Number 931258P
Loudon, Tennessee Facility

Gentlemen:

Please find enclosed duplicate copies of operating permit applications for construction permits 931256P and 93157P. In addition, please find three copies of the July 17, 1992 stack test performed on the spray dryer stack (source No. 53-0081-90) as required by Condition 10 of construction permit 931256P.

Along with the operating permit applications, updated process flow diagrams (PFD's) and process emissions characterictics have been provided for sources covered under permit 931256P. This updated data consists of the deletion of source numbers 90E and 90F from the application, a reduction in exhaust rate from source 90A, and addition of source numbers 90G and 90H. The total net change results in a reduction of 0.34 tons per year PM_{10} estimated to be emitted from the spray dryer stack. The attached PFD's and process emissions data reflects "as-built" status for the spray dryer system.

The results of the enclosed July 17, 1992 stack testing show emissions from the spray dryer stack (#90) less than the 0.005 gr/dscf allowable rate. The average of the three test runs was 0.0021 gr/dscf or 2.17 lbs PM_{10}/hr. This compares to an emission rate of 5.34 lbs/hr PM_{10} obtained from the PSD final determination for permit number 931256P or 5.27 lbs/hr PM_{10} estimated as the PM_{10} emission rate from as-built spray dryer system configuration.

STACK TEST REPORT ROUTE SHEET
(Company Originated)
Stack Test Log No. 805

Company Name AE Staley
Co. Reference No. ____
Source(s) Tested Spray dryer
Pollutant(s) Tested Particulate
Date(s) Tested 9/17/92

Test Observer Darwin Claxton
VE Observer —
Process Observer —
Process Description Included: Yes ✓ No ____
Visible Emissions Included: Yes ____ No ✓

Route To	Position or Organization	Function	Date Received	Date Forwarded	Initials
AEP	Compliance Monitoring Log-Keeper	1. Enter Stack Report in log 2. Complete A-B.3 of Eval. Form No. Copies Received ____	10/5/92		
AEP	Test Report Evaluator	1. Evaluate Test Report Acceptable ___ Unacceptable ✓ 2. Attach Evaluation 3. Date Evaluated 11/6/92			
JWS	Compliance Monitoring Supervisor	1. Review Evaluation Agree ____ Disagree ____			
	Compliance Monitoring Log-Keeper	1. Hold C.M. Report Copy, Original Evaluation and Copy of Route Sheet 2. Send Copy of Report and Evaluation to Regional Office 3. Forward Company File Report Copy & C.M. Evaluation to Air Resources Supervisor.			
	Air Resources Supervisor	1. Finish Engineering Part of Evaluation Compliance IN ___ OUT ___ 2. Report to C.M. no later than ____.			
	Compliance Monitoring Log-Keeper	1. Write Letter Date Letter Mailed ____ 2. Forward Copy of Letter to Regional Office and Company File 3. File Report, Eval., Letter, and Route Sheet 4. Complete Log 5. File Copy of Route Sheet in Quarterly Report File			

ckh 4/...

532-0614

SOURCE TEST REVIEW

STATE OF TENNESSEE
DEPARTMENT OF ENVIRONMENT AND CONSERVATION
SOURCE TEST REVIEW

SUMMARY OF PARTICULATE EMISSIONS SOURCE TEST DATA

Company: A.E. Staley Test Date: July 17. 1992
Source: Spray Dryer

Determination of Dry Standard Gas Sample Volume	RUN-1	RUN-2	RUN-3	AVG
Average pressure differential across the orifice meter, in. H2O	1.773	1.620	1.608	1.67
Barometric pressure at the sampling site, in. H2O	28.95	28.95	28.93	28.94
Absolute average dry gas meter temperature, degree R	541.1	542.1	543.9	542
Dry gas meter calibration factor, dimensionless	0.997	0.997	0.997	0.9970
Volume of gas sample as measured by the dry gas meter, dcf	43.635	41.321	41.321	****
Volume of gas sample, corrected to standard conditions, dscf	41.24	38.96	38.81	****
Determination of Moisture Content of Gas Stream				
Total volume of liquid collected in impingers and silica gel, ml	91.6	83.7	93	89.4
Volume of water vapor in gas sample, standard conditions, scf	4.31	3.94	4.38	4.2
Water vapor in the gas stream, proportion by volume	0.095	0.092	0.101	0.10
Water vapor in the gas stream at saturation, proportion by volume	0.425	0.425	0.428	0.43
Determination of Gas Stream Molecular Weights				
Percent CO2 in gas stream by volume, dry basis	0.4	0.4	0.5	0.4
Percent O2 in gas stream by volume, dry basis	20.2	20.1	20.1	20.1
Molecular weight of gs stream, wet basis, lb/lb-mole	27.9	27.9	27.8	27.8
Determination of Gas Stream Velocity and Volumetric Flow Rates				
Average of square roots of gas stream velocity heads, sqrt(in. H2O)	0.462	0.458	0.457	0.46
Static Pressure of gas stream, in. H2O	-0.3	-0.3	-0.3	-0.3
Absolute average gas stream temperature, degrees R	630.2	630.1	630.4	630
Pitot tube assembly coefficient, dimensionless	0.84	0.84	0.84	0.84
Cross-sectional area of stack or duct, sq. ft.	95.033	95.033	95.033	95.03
Absolute pressure of gas stream, in. Hg	28.93	28.93	28.91	28.92
Average gas stream velocity, ft/sec.	29.3	29.1	29.1	29.17
Actual volumetric flow rate of gas stream, acfm	167301	165872	165734	166302
Dry volumetric flow rate of gas stream, std. conditions, dscfm	122633	121973	120452	121686
Determination of Isokinetic Sampling Rate				
Determination of FILTERABLE PARTICULATE Data				
Total weight of FILTERABLE PARTICULATE collected, mg	8.4	3.1	5.1	5.5
Total sampling time, min.	60.0	60.0	60.0	60.0
Cross-sectional area of the nozzle, sq. ft.	0.000494	0.000494	0.000494	0.0005
filterable particulate concentration, dry basis, standard conditions, gr/dscf	0.00314	0.00123	0.00203	0.0021
filterable particulate concentration, dry basis, standard conditions, mg/dscm	7.2	2.8	4.6	4.9
filterable particulate concentration, dry basis, standard condition, 1E6 * lb/dscf	0.449	0.175	0.290	0.30
filterable particulate, mass rate, lb/hr	3.302	1.283	2.093	2.23
filterable particulate, mass rate, kg/hr	1.5	0.6	0.9	1.0
Percent of isokinetic sampling	107.8	102.4	103.3	104.5

FIELD DATA LOG

PLANT	SOURCE	RUN #
A.E.Staley	Spray Dryer	1

FINAL VOLUME,	49.500	BAROMETRIC PRESSURE,in. Hg	28.95
INITIAL VOLUM	5.865	STATIC PRESSURE,in. H2O	-0.3
NET VOLUME,CF	43.635	VOL. IMPINGER LIQ., ml	91.6
PERCENT CO2	0.4	STACK AREA, SQ. FT.	95.033
PERCENT O2	20.1	NOZZLE DIAMETER, in.	0.301
SAMPLING TIME,	60	PARTICULATES, mg	8.4
DRY BULB TEMP,	NA	WET BULB TEMP, F	NA

STACK TEMP F	VELOCI HEAD DELTA P	SQRT(DEL P)	ORIFICE ME DELTA H, in. H20	GAS SAMP TEMP, IN F	GAS SAMP TEMP, OU F	GAS SA AVG TE (IN+OU
170	0.240	0.49	2.06	79	76	
172	0.270	0.52	2.20	79	76	
172	0.300	0.55	2.44	80	76	
172	0.320	0.57	2.60	82	76	
171	0.270	0.52	2.20	83	76	
167	0.220	0.47	1.79	85	77	
171	0.190	0.44	1.54	84	77	
168	0.220	0.47	1.79	86	77	
169	0.270	0.52	2.20	86	77	
171	0.320	0.57	2.59	86	78	
171	0.300	0.55	2.44	87	78	
172	0.270	0.52	2.20	87	78	
171	0.160	0.40	1.30	84	78	
171	0.180	0.42	1.46	84	78	
171	0.200	0.45	1.63	85	78	
171	0.220	0.47	1.79	86	79	
171	0.180	0.42	1.46	87	79	
171	0.170	0.41	1.38	87	79	
169	0.170	0.41	1.38	82	79	
170	0.170	0.41	1.38	86	79	
170	0.160	0.40	1.30	87	79	
170	0.180	0.42	1.46	88	79	
170	0.120	0.35	0.98	89	79	
170	0.120	0.35	0.98	89	79	
170.5		0.462	1.773	84.9	77.8	81.4

FIELD DATA LOG

PLANT	SOURCE	RUN #
A.E.Staley	Spray Dryer	2

FINAL VOLUME,	91.100	BAROMETRIC PRESSURE,in. Hg	28.95
INITIAL VOLUM	49.779	STATIC PRESSURE,in. H2O	-0.3
NET VOLUME,CF	41.321	VOL. IMPINGER LIQ., ml	83.7
PERCENT CO2	0.4	STACK AREA, SQ. FT.	95.033
PERCENT O2	20.1	NOZZLE DIAMETER, in.	0.301
SAMPLING TIME,	60	PARTICULATES, mg	3.1
DRY BULB TEMP,	NA	WET BULB TEMP, F	NA

STACK TEMP F	VELOCI HEAD DELTA P	SQRT(DEL P)	ORIFICE ME DELTA H, in. H20	GAS SAMP TEMP, IN F	GAS SAMP TEMP, OU F	GAS SA AVG TE (IN+OU
169	0.170	0.41	1.29	79	77	
170	0.170	0.41	1.29	82	78	
170	0.150	0.39	1.14	83	78	
170	0.150	0.39	1.14	83	78	
170	0.150	0.39	1.14	83	78	
170	0.120	0.35	0.91	85	78	
170	0.160	0.40	1.21	84	78	
170	0.160	0.40	1.21	85	78	
170	0.180	0.42	1.36	86	78	
171	0.180	0.42	1.36	86	79	
171	0.180	0.42	1.36	86	79	
171	0.180	0.42	1.36	87	79	
170	0.240	0.49	1.82	84	79	
170	0.220	0.47	1.67	86	79	
170	0.270	0.52	2.05	86	79	
171	0.310	0.56	2.35	87	79	
171	0.290	0.54	2.20	87	80	
171	0.270	0.52	2.05	87	83	
170	0.240	0.49	1.82	87	80	
171	0.260	0.51	1.97	89	80	
171	0.290	0.54	2.20	89	80	
171	0.300	0.55	2.27	89	80	
171	0.260	0.51	1.97	89	80	
171	0.230	0.48	1.74	89	80	
170.4		0.458	1.620	85.8	79.0	82.4

FIELD DATA LOG

PLANT	SOURCE	RUN #
A.E.Staley	Spray Dryer	3

FINAL VOLUME,	91.100	BAROMETRIC PRESSURE,in. Hg	28.93
INITIAL VOLUM	49.779	STATIC PRESSURE,in. H2O	-0.3
NET VOLUME,CF	41.321	VOL. IMPINGER LIQ., ml	93.0
PERCENT CO2	0.4	STACK AREA, SQ. FT.	95.033
PERCENT O2	20.5	NOZZLE DIAMETER, in.	0.301
SAMPLING TIME,	60	PARTICULATES, mg	5.1
DRY BULB TEMP,	NA	WET BULB TEMP, F	NA

STACK TEMP F	VELOCI HEAD DELTA P	SQRT(DEL P)	ORIFICE ME DELTA H, in. H20	GAS SAMP TEMP, IN F	GAS SAMP TEMP, OU F	GAS SA AVG TE (IN+OU
169	0.240	0.49	1.82	81	80	
172	0.270	0.52	2.05	83	80	
171	0.290	0.54	2.20	84	82	
171	0.300	0.55	2.27	84	82	
171	0.270	0.52	2.05	86	82	
171	0.240	0.49	1.82	86	82	
172	0.220	0.47	1.67	85	81	
172	0.240	0.49	1.82	86	81	
171	0.280	0.53	2.12	86	82	
172	0.300	0.55	2.27	87	82	
171	0.260	0.51	1.97	87	82	
171	0.230	0.48	1.74	87	82	
170	0.140	0.37	1.06	86	81	
170	0.160	0.40	1.21	88	81	
170	0.150	0.39	1.14	88	82	
170	0.170	0.41	1.29	88	82	
170	0.170	0.41	1.29	89	82	
170	0.160	0.40	1.21	89	82	
171	0.160	0.40	1.21	87	82	
171	0.160	0.40	1.21	87	82	
171	0.170	0.41	1.29	89	82	
170	0.170	0.41	1.29	89	82	
170	0.170	0.41	1.29	89	82	
170	0.170	0.41	1.29	89	83	
170.7		0.457	1.608	86.7	81.7	84.2

MOSTARDI-PLATT ASSOCIATES, INC.

945 Oaklawn Avenue
Elmhurst, Illinois 60126
(708) 993-9000
Fax: (708) 993-9017

RECEIVED
JAN 07 1993
DATE
CO. NO.
I. D. A 1 2 3 4 5 6
B 1 2 3 4 5
CS
OTHER

FAX TRANSMITTAL SHEET

TO: Firm Name: TENNESSEE DIVISION OF AIR POLLUTION

Attention: MR. ALVIN PRATT

Fax Number: (615) 532-0614

FROM: Sender: DAVID A. OZAWA

Date: 1/7/93

Number of Pages 5 (including cover sheet)

If you have not received the total number of pages as indicated above, please call **Holli Wagenaar** at (708) 993-9000.

A physical copy of this fax **will/will not** be mailed.

Message: ALVIN,

PLEASE LET ME KNOW IF YOU HAVE ANY QUESTIONS OR REQUIRE ADDITIONAL INFORMATION.

SORRY THESE WERE NOT INCLUDED IN THE ORIGINAL REPORT.

DAVE

faxsheet.mpa

TYPE S PITOT TUBE INSPECTION DATA FORM

Pitot tube assembly level? ✓ yes _____ no

Pitot tube openings damaged? _____ yes (explain below) ✓ no

α_1 = [illegible] ° (<10°), α_2 = 0 ° (<10°)

β_1 = [illegible] ° (<5°), β_2 = [illegible] ° (<5°)

γ = [illegible] °, θ = [illegible] °, A = [illegible] (in.)

z = A sin γ = [illegible] (in.); (<0.125 in.)

w = A sin θ = [illegible] (in.); (<0.03125 in.)

P_A = [illegible] (in.), P_B = [illegible] (in.), D_t = [illegible] (in.)

Comments: [illegible]

[illegible]

Calibrated 1-29-92 C_p (A) = 0.840

C_p (B) = 0.838

Calibration required? _____ yes _____ no

PITOT TUBE # 31 DATE 1-27-92 NAME S3 DR TR

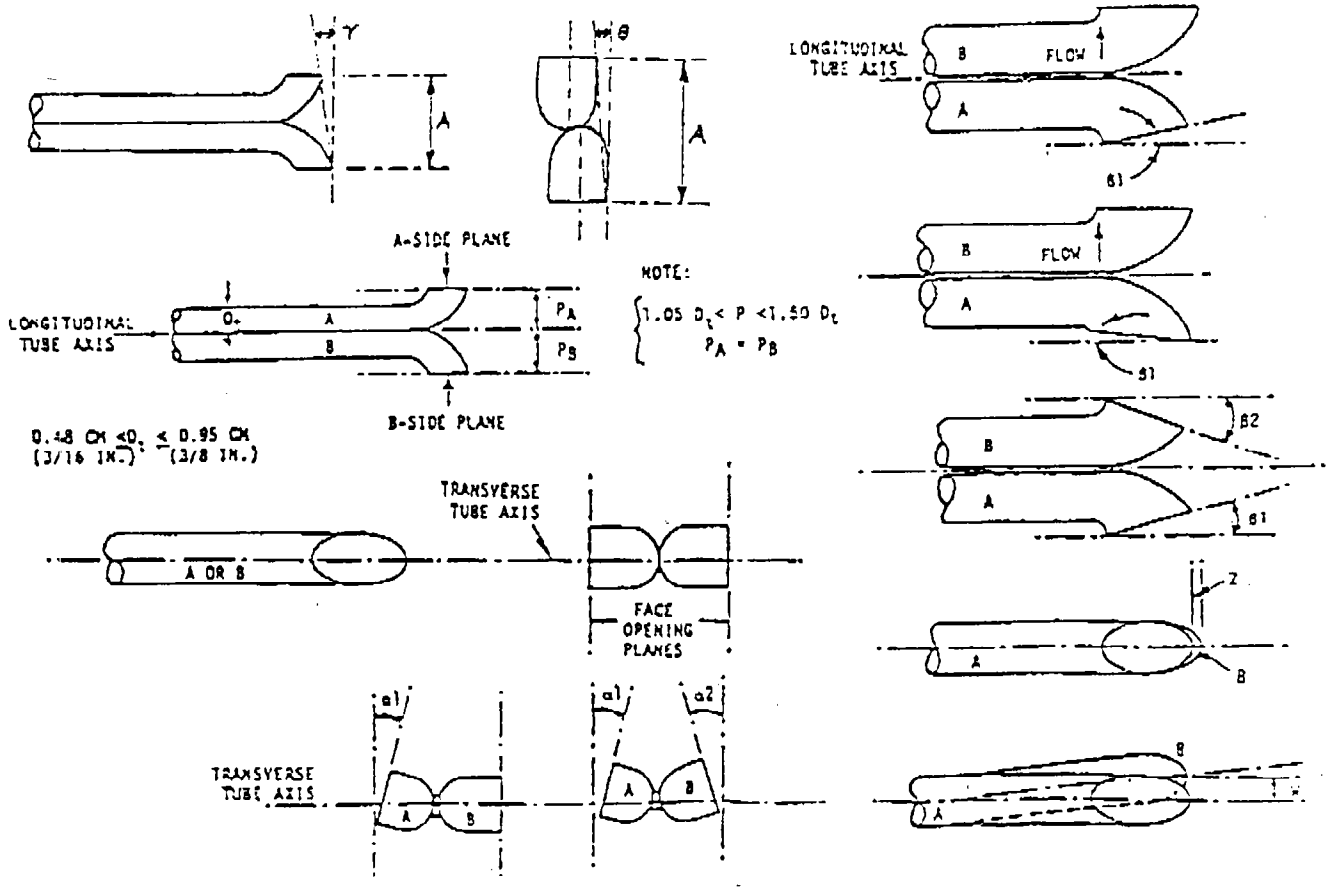

PITOT TUBE CALIBRATION DATA

Calibration pitot tube: type Stand. Hem. size (OD) .250 ID number S-1

Type S pitot tube ID number 31 $C_{p(std)}$ = 0.99

Calibration: date 1-29-92 performed by DB/SB

A-Side Calibration

Δp_{std}, (in.) H_2O	Δp_s, (in.) H_2O	$C_{p(S)}$ [a]	DEV.[b]
.375	.520	.841	.001
.657	.915	.839	.001
1.64	2.28	.840	.000
2.33	3.25	.838	.002
3.60	5.00	.840	.000
Average		0.840	

B-Side Calibration

Δp_{std}, (in.) H_2O	Δp_s, (in.) H_2O	$C_{p(S)}$ [a]	DEV.[b]
.375	.520	.841	.003
.685	.954	.839	.001
1.38	1.94	.835	.003
2.48	3.47	.837	.001
3.62	5.06	.837	.001
Average		0.838	

[a] $C_{p(S)} = C_{p(std)} \sqrt{\frac{\Delta p_{std}}{\Delta p_s}}$ = _____

[b] DEV = $C_{p(S)} - \bar{C}_p$, (must be ≤ 0.01)

$\bar{C}_p(A) - \bar{C}_p(B)$ = _____ (must be ≤ 0.01).

[illegible] DATA FOR COMPUTER ENTRY

Dry Gas Meter No. E-12 Date 7/22/92 Calibrated by HRS

Standard Meter No. 6847086 Standard Meter (Y) 0.0957

Barometric Pressure 29.[illegible] + 0.65 = [illegible] 29.93

Ideal ΔH / Rate / Volume	Orifice Setting in. H_2O (ΔH)	Gas Volume, ft^3 Standard Meter (V_r)	Gas Volume, ft^3 Dry Gas Meter (V_d)	Time Minutes (Approx)	Pressure in. H_2O Standard Meter (p_r)	Meter Temp., °F Std. Meter (t_r)	Meter Temp., °F Dry Gas Meter Inlet (t_{d_i})	Meter Temp., °F Dry Gas Meter Outlet (t_{d_o})	Run Time θ min.	Run Time θ sec.
0.10	0.24	27.101	51.698	0	0	76	93	81		
				5						
0.25		5.091	5.153	10						
				15						
>5	.25	22.010	46.545	20	0	76	81	80	19	30
Run 1										
0.30	0.44	43.320	34.186	0	0	77	84	81		
				3						
0.45				6						
				9						
>5	0.45	27.326	51.916	12	0	77	83	81	18	54
Run 2										
0.60		45.215	69.920	0	0	77	85	82		
				4						
0.65				8						
				12						
>10	0.65	34.476	59.135	16	0	77	83	81	24	58
Run 3										
0.90	0.87	21.862	46.413	0	0	73	80	81		
				4						
0.80		11.036	11.058	8						
				10						
>10	0.90	10.826	35.355	13	0	73	80	81	22	08
Run 4										
1.30	1.20	57.163	61.821	0	0	77	85	82		
				3						
0.95				6						
				9						
>10	1.30	45.596	70.230	11	0	77	85	82	19	5
Run 5										
1.90	1.90	67.465	92.255	0	0	77	85	82		
				2						
[illegible]				5						
				7						
>10	1.90	57.356	82.140	9	0	77	89	83	13	43
Run 6										

METER BOX CALIBRATION DATA

Dry Gas Meter No. E-12 Date 7/22/92/ Calibrated By MPS
Standard Meter No. 6847886 Yr =0.9957 Barometric Pressure, in. Hg (Pb): 29.93 - 0.65 = 29.28

Run No	Orifice Setting in. H_2O Chg(H)	Gas Volume, ft^3 Standard Dry Gas Meter (V_r)	Gas Volume, ft^3 Standard Dry Gas Meter (V_d)	Pressure in. H_2O Standard Meter (P_r)	Meter Temperature, °F Standard Meter (t_r)	Meter Temperature, °F Dry Gas Meter Inlet (t_{di})	Meter Temperature, °F Dry Gas Meter Outlet (t_{do})	Meter Temperature, °F Dry Gas Meter Avg (t_d)	Time min.	Time sec.	Y	Chg(H@) in. H_2O
		27.101	51.698									
		22.010	46.545									
1	0.25	5.091	5.153	0.00	76	82	81	81.3	18	0	0.993	1.775
		34.186	58.820									
		27.215	51.916									
2	0.44	6.971	6.904	0.00	77	84	81	82.3	18	54	1.014	1.878
		45.215	69.940									
		34.476	59.135									
3	0.64	10.739	10.805	0.00	77	84	82	82.8	24	38	0.999	1.954
		21.862	46.413									
		10.826	35.355									
4	0.88	11.036	11.058	0.00	73	83	80	81.5	22	1	1.007	2.006
		57.163	81.821									
		45.596	70.230									
5	1.25	11.567	11.591	0.00	77	85	82	[illegible]	19	59	1.003	2.162
		67.465	92.255									
		57.356	82.140									
6	1.90	10.109	10.115	0.00	77	88	83	85.0	[illegible]	43	1.005	2.021

AVERAGE 1.003 1.966

MOSTARDI-PLATT ASSOCIATES, INC.

Project/Project Number: A.E. STALEY-LOUDON / ~~21602~~ 21511

Date: 07-24-92 Analyst: Irine Peysakho

Sample date 07-17-92

Description	Initial Weight	Final Weight	Net Weight Gain
Test # 1			
Filter # 977	0.8059	0.8067	0.0008
Acetone Wash # 4071-4075 145 ml	7.6199	7.6281	0.0082
Acetone Blank			0.0006
Total Weight			0.0084
Test # 2			
Filter # 987	0.7947	0.7948	0.0001
Acetone Wash # 3959-3960 70 ml	7.6414	7.6447	0.0033
Acetone Blank			0.0003
Total Weight			0.0031
Test # 3			
Filter # 988	0.7962	0.7962	0.0000
Acetone Wash # 3916-3920 160 ml	7.5848	7.5905	0.0057
Acetone Blank			0.0006
Total Weight			0.0051
Test #			
Filter #			
Acetone Wash # ml			
Acetone Blank			
Total Weight			
Blank			
Acetone Wash # 3467-3470 100 ml	7.6526	7.6530	0.0004

f:\data\lab\M5.frm

CLS 7/27/92

NOMENCLATURE - PARTICULATES

A	=	Cross-sectional area of stack or duct, ft^2
A_n	=	Cross-sectional area of nozzle, ft^2
B_{wo}	=	Water vapor in gas stream, proportion by volume
C_a	=	Acetone blank residue concentration, g/g
C_{acf}	=	Concentration of particulate matter in gas stream at actual conditions, gr/acf
C_p	=	Pitot tube coefficient, dimensionless
C_s	=	Concentration of particulate matter in gas stream, dry basis, corrected to standard conditions, gr/dscf
IKV	=	Isokinetic sampling variance, must be $.90 \leq IKV \leq 1.10$
M_d	=	Dry molecular weight of gas, lb/lb-mole
m_n	=	Total amount of particulate matter collected, grams
M_s	=	Molecular weight of gas, wet basis, lb/lb-mole
M_w	=	Molecular weight of water, 18.0 lb/lb-mole
m_a	=	Mass of residue of acetone after evaporation, grams
P_{bar}	=	Barometric pressure at testing site, in.Hg
P_g	=	Static pressure of gas, in.Hg (in.H_2O/13.6)
P_s	=	Absolute pressure of gas, in.Hg = $P_{bar} + P_g$
P_{std}	=	Standard absolute pressure, 29.92 in.Hg
Q_{acfm}	=	Actual volumetric gas flow rate, acfm
Q_{sd}	=	Dry volumetric gas flow rate corrected to standard conditions, dscf/hr
R	=	Ideal gas constant, 21.85 in.Hg-ft^3/°R-lb-mole
T_m	=	Absolute average dry gas meter temperature, °R
T_s	=	Absolute average gas temperature, °R
T_{std}	=	Standard absolute temperature, 528°R
V_a	=	Volume of acetone blank, ml
V_{aw}	=	Volume of acetone used in wash, ml
V_{tc}	=	Total volume of liquid collected in impingers and silica gel, ml
V_m	=	Volume of gas sample as measured by dry gas meter, dcf
$V_{m(std)}$	=	Volume of gas sample measured by dry gas meter, corrected to standard conditions, dscf
v_s	=	Average gas velocity, ft/sec
$V_{w(std)}$	=	Volume of water vapor in gas sample, corrected to standard conditions, scf
W_a	=	Weight of residue in acetone wash, grams
Y	=	Dry gas meter calibration factor
ΔH	=	Average pressure differential across the orifice meter, in.H_2O
Δp	=	Velocity head of gas, in.H_2O
ρ_a	=	Density of acetone, 0.7855 g/ml (average)
ρ_w	=	Density of water, 0.002201 lb/ml
θ	=	Total sampling time, minutes
K_1	=	17.64 °R/in.Hg
K_2	=	0.04707 ft^3/ml
K_4	=	0.09450/100 = 0.000945
K_p	=	Pitot tube constant, $85.49 \frac{ft}{sec}\left[\frac{(lb/lb\text{-}mole)(in.Hg)}{(°R)(in.H_2O)}\right]^{1/2}$
%EA	=	Percent excess air
$\%CO_2$	=	Percent carbon dioxide by volume, dry basis
$\%O_2$	=	Percent oxygen by volume, dry basis
%CO	=	Percent carbon monoxide by volume, dry basis
$\%N_2$	=	Percent nitrogen by volume, dry basis
0.264	=	Ratio of O_2 to N_2 in air, v/v
0.28	=	Molecular weight of N_2 or CO, divided by 100
0.32	=	Molecular weight of O_2 divided by 100
0.44	=	Molecular weight of CO_2 divided by 100
13.6	=	Specific gravity of mercury (Hg)

CALCULATION FORMULAE PARTICULATES

1. $$V_{m(std)} = V_m Y \left(\frac{T_{std}}{T_m}\right)\left(\frac{P_{bar} + \frac{\Delta H}{13.6}}{P_{std}}\right) = K_1 V_m Y \frac{P_{bar} + \frac{\Delta H}{13.6}}{T_m}$$

2. $$V_{w(std)} = V_{lc}\left(\frac{\rho_w}{M_w}\right)\left(\frac{RT_{std}}{P_{std}}\right) = K_2 V_{lc}$$

3. $$B_{ws} = \frac{V_{w(std)}}{V_{m(std)} + V_{w(std)}}$$

4a. $$C_s = \frac{m_s}{V_s \rho_s}$$

4b. $$W_s = C_s V_{sw} \rho_s$$

5. $$C_s = (15.43 \text{ gains/gram})\ (m_n/V_{m(std)})$$

6. $$C_{scf} = 15.43\ K_1 \left(\frac{m_n P_s}{V_{w(std)} + V_{m(std)}\ T_s}\right)$$

7. $$\%EA = \left(\frac{\%O_2 - (0.5\%CO)}{0.264\%N_2 - (\%O_2 - 0.5\%\ CO)}\right) \times 100$$

8. $$M_d = 0.44(\%CO_2) + 0.32(\%O_2) + 0.28(\%N_2 + \%\ CO)$$

9. $$M_s = M_d\ (1\text{-}B_{ws}) + 18.0B_{ws}$$

10. $$v_s = K_p C_p \sqrt{\frac{\Delta P\ T_s}{P_s M_s}}$$

11. $$Q_{acfm} = v_s A\ (60_{sec/min})$$

12. $$Q_{sd} = (3600_{sec/hr})\ (1 - B_{ws})\ v_s \left(\frac{T_{std} P_s}{T_s P_{std}}\right) A$$

13. E (emission rate, lbs/hr) = $Q_{sd}(C_s/7000$ gains/lb)

14. $$IKV = \frac{T_s V_{m(std)} P_{std}}{T_{std} v_s \theta A_n P_s 60(1-B_{ws})} = K_4 \frac{T_s V_{m(std)}}{P_s v_s A_n \theta (1-B_{ws})}$$

MOSTARDI-PLATT ASSOCIATES INC.

TEST SUPPORT DATA

PROJECT #: 21511 TEST RUN #: 1
TEST DATE: 7/17/92

CUSTOMER: A.E. STALEY MANUFACTURING CO.

PLANT: LOUDEN, TENNESSEE

TEST LOC: SPRAY DRYER STACK

CLIENT: A.E. STALEY MANUFACTURING CO.

OPERATOR: S.BURTON/E.PETERSON

CONTROL BOX: E-12

METER #: E-12

METER CALIBRATION FACTOR: .997

PITOT ID #:

PITOT TUBE COEFFCIENT: .840

PORT LENGTH: 6 in.

PORT SIZE: 4 in.

PORT TYPE: NIPPLE

BAROMETRIC PRESSURE in. Hg. : 28.95

FLUE PRESSURE in. H20 : -.30

FLUE PRESSURE in. Hg. abs: 28.93

PROBE LENGTH: 5.5 ft.

PROBE LINER MATERIAL: 316 SS

NOZZLE IDENTIFICATION #:

CALIBRATED NOZZLE DIAMETER: .301 in.

LEAK CHECK ..PRE: .005 POST: .002 @ 10.000 in. Hg.

DUCT SHAPE: CIRCULAR

DUCT AREA: 95.03 sq.ft.

TEST LENGTH: 60.00 min.

MINUTES PER PORT: 2.50

TOTAL NUMBER OF TRAVERSE POINTS: 24

MOSTARDI-PLATT ASSOCIATES INC.

PARTICULATE TEST DATA SHEET
SPRAY DRYER STACK

PROJECT # 21511 TEST DATA RUN # 1 RUN DATE: 7/17/92

PORT POINT NUMBER	CHG (▲P) in. H2O	SQUARE ROOT (▲P)	TIME 24 HR. CLOCK	Vm (Cubic) (ft.)	ORIFICE CHG (▲H) in. H2O	STACK TEMP Ts °F	METER TEMP Tm	
							INLET °F	OUTLET °F
1.01	.240	.4899	625	5.87	2.064	170.00	79.00	76.00
1.02	.270	.5196	628	8.40	2.200	172.00	79.00	76.00
1.03	.300	.5477	630	10.28	2.440	172.00	80.00	76.00
1.04	.320	.5657	633	12.39	2.600	172.00	82.00	76.00
1.05	.270	.5196	635	14.60	2.200	171.00	83.00	76.00
1.06	.220	.4690	638	16.63	1.790	167.00	85.00	77.00
			640	18.46				
2.01	.190	.4359	642	18.46	1.540	168.00	84.00	77.00
2.02	.220	.4690	645	20.22	1.790	169.00	86.00	77.00
2.03	.270	.5196	647	21.99	2.200	171.00	86.00	77.00
2.04	.320	.5657	650	24.02	2.590	171.00	86.00	78.00
2.05	.300	.5477	652	26.20	2.440	171.00	87.00	78.00
2.06	.270	.5196	655	28.35	2.200	172.00	87.00	78.00
			657	30.41				
3.01	.160	.4000	700	30.41	1.300	171.00	84.00	78.00
3.02	.180	.4243	703	32.00	1.460	171.00	84.00	78.00
3.03	.200	.4472	705	33.78	1.630	171.00	85.00	78.00
3.04	.220	.4690	708	35.42	1.790	171.00	86.00	79.00
3.05	.180	.4243	710	37.18	1.460	171.00	87.00	79.00
3.06	.170	.4123	713	38.85	1.380	171.00	87.00	79.00
			715	40.43				
4.01	.170	.4123	718	40.43	1.380	169.00	82.00	79.00
4.02	.170	.4123	721	42.04	1.380	170.00	86.00	79.00
4.03	.160	.4000	723	43.63	1.300	170.00	87.00	79.00
4.04	.180	.4243	726	45.16	1.460	170.00	88.00	79.00
4.05	.120	.3464	728	46.82	.976	170.00	89.00	79.00
4.06	.120	.3464	731	48.15	.976	170.00	89.00	79.00
			733	49.50				

MOSTARDI-PLATT ASSOCIATES INC.

PARTICULATE TEST DATA SHEET
SPRAY DRYER STACK

PROJECT # 21511 TEST DATA RUN # 1 RUN DATE: 7/17/92

PORT POINT NUMBER	CHG (▲P) in. H2O	SQUARE ROOT (▲P)	TIME 24 HR. CLOCK	Vm (Cubic) (ft.)	ORIFICE CHG (▲H) in. H2O	STACK TEMP Ts °F	METER TEMP Tm INLET °F	METER TEMP Tm OUTLET °F

	49.50	TOTAL VOLUME CHANGE
	- 5.87	LESS INITIAL METER VOLUME
	- 0.00	LESS VOLUME DRAWN DURING PORT CHANGE
TOTAL TEST VOLUME ...	43.64	

SUMMARY

	SQ. ROOT(▲P)	Vm	CHG (▲H)	Ts	INLET + OUTLET AVG. Tm
TOTAL	11.088	43.64	42.55	4091	1953
AVERAGE	.4620	——	1.773	170.5	81.4

MOSTARDI-PLATT ASSOCIATES INC.

ADDITIONAL INPUTS PARTICULATE ANALYSIS
SPRAY DRYER STACK

PROJECT # 21511
RUN # 1

ORSAT ANALYSIS

% CO2	% O2
.40	20.20
.40 %	20.20 % ....AVERAGE PERCENTAGES

[SILICA GEL FINAL WT. 255.8 gm.] - [SILICA GEL INITIAL WT. 244.2 gm.] = 11.6
[FINAL IMPINGER H2O 280.0 ml.] - [INITIAL IMPINGER H2O 200.0ml.] = 80.0

TOTAL 91.6

ACETONE BLANK RESIDUE WT. = .0004 ml.
ACETONE BLANK VOLUME = 100.0000 ml.
ACETONE WASH VOLUME = 145.0000 ml.

$$\text{ACETONE BLANK} = \frac{\text{WASH VOLUME}}{\text{BLANK VOLUME}} \times \text{BLANK RESIDUE} = .0006$$

MOSTARDI-PLATT ASSOCIATES INC.

ADDITIONAL INPUTS PARTICULATE ANALYSIS
SPRAY DRYER STACK

PROJECT # 21511
RUN # 1

ITEM	FINAL WT.	-	INITIAL WT.	=	NET WT.	
FILTER 977	.8067		.8059		.0008	
ACETONE WASH	7.6281		7.6199		.0082	
					.0090	TOTAL NET WT.
				-	.0006	LESS ACETONE BLANK
			TOTAL		.0084	

MOSTARDI-PLATT ASSOCIATES INC.

PROJECT # 21511

PARTICULATE TEST RUN # 1 RESULTS SUMMARY

SPRAY DRYER STACK

7/17/92

PARTICULATE CONCENTRATION @ STACK COND., Cacf	0.0023	GR/ACF
PARTICULATE CONCENTRATION @ DRY STAND. COND., Cs	0.0032	GR/SCFD
PARTICULATE CONCENTRATION, E	3.3143	Lbs/hr.
BAROMETRIC PRESSURE, Pbar	28.95	in. Hg.
AVERAGE FLUE GAS PRESSURE, Ps	28.93	in. Hg.
AVERAGE FLUE GAS TEMPERATURE, Ts	630	°R
AVERAGE METER TEMPERATURE, Tm	541	°R
TOTAL METER VOLUME, Vm	43.635	cu. ft.
TOTAL METER VOLUME @ STAND. COND., Vm(STD)	41.224	cu. ft
TOTAL WATER VAPOR @ STAND. COND., Vw(STD)	4.31	cu. ft.
WATER VAPOR IN GAS STREAM PROPORTIONED BY VOLUME, Bws	0.0947	
AVERAGE CARBON DIOXIDE CONTENT OF GAS, CO2	.40	%
AVERAGE OXYGEN CONTENT OF GAS, 02	20.20	%
AVERAGE NITROGEN CONTENT OF GAS, N2	79.40	%
MOISTURE CORRECTION FACTOR, (1-Bws)	0.9053	
AVERAGE GAS VELOCITY, Vs	29.35	ft./sec.
AVERAGE GAS VOLUMETRIC FLOW RATE, STACK COND.	167,369	ACFM
AVERAGE GAS VOLUMETRIC FLOW RATE, STAND. COND.	122,690	DSCFM
AVERAGE GAS VOLUMETRIC FLOW RATE, STAND. COND.	7,361,380	DSCFH
PERCENT EXCESS AIR	******	%
MOLECULAR WEIGHT OF THE STACK OF GAS, DRY BASIS, Md	28.8720	lb./lb. mole
MOLECULAR WEIGHT OF THE STACK OF GAS, WET BASIS, Ms	27.8426	lb./lb. mole
STACK GAS SPECIFIC GRAVITY (AIR = 1,000)	.962	
ISOKINETIC VARIANCE, .90 <= IKV <= 1.10	1.08	

*STANDARD CONDITIONS = 68 °F, 29.92 in. hg.

MOSTARDI-PLATT ASSOCIATES INC.

TEST SUPPORT DATA

PROJECT #: 21511 TEST RUN #: 2
TEST DATE: 7/17/92

CUSTOMER: A.E. STALEY MANUFACTURING CO.

PLANT: LOUDEN, TENNESSEE

TEST LOC: SPRAY DRYER STACK

CLIENT: A.E. STALEY MANUFACTURING CO.

OPERATOR: S.BURTON/E.PETERSON

CONTROL BOX: E-12

METER #: E-12

METER CALIBRATION FACTOR: .997

PITOT ID #:

PITOT TUBE COEFFCIENT: .840

PORT LENGTH: 6 in.

PORT SIZE: 4 in.

PORT TYPE: NIPPLE

BAROMETRIC PRESSURE in. Hg. : 28.95

FLUE PRESSURE in. H20 : -.30

FLUE PRESSURE in. Hg. abs: 28.93

PROBE LENGTH: 5.5 ft.

PROBE LINER MATERIAL: 316 SS

NOZZLE IDENTIFICATION #:

CALIBRATED NOZZLE DIAMETER: .301 in.

LEAK CHECK ..PRE: .005 POST: .005 @ 12.000 in. Hg.

DUCT SHAPE: CIRCULAR

DUCT AREA: 95.03 sq.ft.

TEST LENGTH: 60.00 min.

MINUTES PER PORT: 2.50

TOTAL NUMBER OF TRAVERSE POINTS: 24

MOSTARDI-PLATT ASSOCIATES INC.

PARTICULATE TEST DATA SHEET
SPRAY DRYER STACK

PROJECT # 21511 TEST DATA RUN # 2 RUN DATE: 7/17/92

PORT POINT NUMBER	CHG (▲P) in. H2O	SQUARE ROOT (▲P)	TIME 24 HR. CLOCK	Vm (Cubic) (ft.)	ORIFICE CHG (▲H) in. H2O	STACK TEMP Ts °F	METER TEMP Tm	
							INLET °F	OUTLET °F
1.01	.170	.4123	803	49.78	1.290	169.00	79.00	77.00
1.02	.170	.4123	806	51.34	1.290	170.00	82.00	78.00
1.03	.150	.3873	808	52.89	1.140	170.00	83.00	78.00
1.04	.150	.3873	811	54.37	1.140	170.00	83.00	78.00
1.05	.150	.3873	813	55.80	1.140	170.00	83.00	78.00
1.06	.120	.3464	816	57.32	.910	170.00	85.00	78.00
			818	58.60				
2.01	.160	.4000	819	58.60	1.210	170.00	84.00	78.00
2.02	.160	.4000	822	60.13	1.210	170.00	85.00	78.00
2.03	.180	.4243	824	61.60	1.360	170.00	86.00	78.00
2.04	.180	.4243	827	63.15	1.360	171.00	86.00	79.00
2.05	.180	.4243	829	64.74	1.360	171.00	86.00	79.00
2.06	.180	.4243	832	66.33	1.360	171.00	87.00	79.00
			834	67.90				
3.01	.240	.4899	836	67.90	1.820	170.00	84.00	79.00
3.02	.220	.4690	839	69.74	1.670	170.00	86.00	79.00
3.03	.270	.5196	841	71.50	2.050	170.00	86.00	79.00
3.04	.310	.5568	844	73.50	2.350	171.00	87.00	79.00
3.05	.290	.5385	846	75.59	2.200	171.00	87.00	80.00
3.06	.270	.5196	849	77.58	2.050	171.00	87.00	83.00
			851	79.52				
4.01	.240	.4899	854	79.52	1.820	170.00	87.00	80.00
4.02	.260	.5099	857	81.40	1.970	171.00	89.00	80.00
4.03	.290	.5385	859	83.28	2.200	171.00	89.00	80.00
4.04	.300	.5477	902	85.32	2.270	171.00	89.00	80.00
4.05	.260	.5099	904	87.36	1.970	171.00	89.00	80.00
4.06	.230	.4796	907	89.30	1.740	171.00	89.00	80.00
			909	91.10				

MOSTARDI-PLATT ASSOCIATES INC.

PARTICULATE TEST DATA SHEET
SPRAY DRYER STACK

PROJECT # 21511 TEST DATA RUN # 2 RUN DATE: 7/17/92

PORT POINT NUMBER	CHG (▲P) in. H2O	SQUARE ROOT (▲P)	TIME 24 HR. CLOCK	Vm (Cubic) (ft.)	ORIFICE CHG (▲H) in. H2O	STACK TEMP Ts °F	METER TEMP Tm	
							INLET °F	OUTLET °F

	91.10	TOTAL VOLUME CHANGE
	- 49.78	LESS INITIAL METER VOLUME
	- 0.00	LESS VOLUME DRAWN DURING PORT CHANGE
TOTAL TEST VOLUME ...	41.32	

SUMMARY

	SQ. ROOT(▲P)	Vm	CHG (▲H)	Ts	INLET + OUTLET AVG. Tm
TOTAL	10.999	41.32	38.88	4090	1978
AVERAGE	.4583	—	1.620	170.4	82.4

MOSTARDI-PLATT ASSOCIATES INC.

ADDITIONAL INPUTS PARTICULATE ANALYSIS
SPRAY DRYER STACK

PROJECT # 21511
RUN # 2

ORSAT ANALYSIS

% CO2	% O2
.40	20.10
.40 %	20.10 % ....AVERAGE PERCENTAGES

[SILICA GEL FINAL WT. 232.6 gm.] - [SILICA GEL INITIAL WT. 222.9 gm.] = 9.7
[FINAL IMPINGER H2O 274.0 ml.] - [INITIAL IMPINGER H2O 200.0ml.] = 74.0

TOTAL 83.7

ACETONE BLANK RESIDUE WT. = .0004 ml.
ACETONE BLANK VOLUME = 100.0000 ml.
ACETONE WASH VOLUME = 70.0000 ml.

$$\text{ACETONE BLANK} = \frac{\text{WASH VOLUME}}{\text{BLANK VOLUME}} \times \text{BLANK RESIDUE} = .0003$$

MOSTARDI-PLATT ASSOCIATES INC.

ADDITIONAL INPUTS PARTICULATE ANALYSIS
SPRAY DRYER STACK

PROJECT # 21511
RUN # 2

ITEM	FINAL WT.	-	INITIAL WT.	=	NET WT.	
FILTER 987	.7948		.7947		.0001	
ACETONE WASH	7.6447		7.6414		.0033	
					.0034	TOTAL NET WT.
				-	.0003	LESS ACETONE BLANK
			TOTAL		.0031	

MOSTARDI-PLATT ASSOCIATES INC.

PROJECT # 21511

PARTICULATE TEST RUN # 2 RESULTS SUMMARY

SPRAY DRYER STACK

7/17/92

PARTICULATE CONCENTRATION @ STACK COND., Cacf	0.0009	GR/ACF
PARTICULATE CONCENTRATION @ DRY STAND. COND., Cs	0.0012	GR/SCFD
PARTICULATE CONCENTRATION, E	1.2929	Lbs/hr.
BAROMETRIC PRESSURE, Pbar	28.95	in. Hg.
AVERAGE FLUE GAS PRESSURE, Ps	28.93	in. Hg.
AVERAGE FLUE GAS TEMPERATURE, Ts	630	°R
AVERAGE METER TEMPERATURE, Tm	542	°R
TOTAL METER VOLUME, Vm	41.321	cu. ft.
TOTAL METER VOLUME @ STAND. COND., Vm(STD)	38.948	cu. ft
TOTAL WATER VAPOR @ STAND. COND., Vw(STD)	3.94	cu. ft.
WATER VAPOR IN GAS STREAM PROPORTIONED BY VOLUME, Bws	0.0919	
AVERAGE CARBON DIOXIDE CONTENT OF GAS, CO2	.40	%
AVERAGE OXYGEN CONTENT OF GAS, 02	20.10	%
AVERAGE NITROGEN CONTENT OF GAS, N2	79.50	%
MOISTURE CORRECTION FACTOR, (1-Bws)	0.9081	
AVERAGE GAS VELOCITY, Vs	29.10	ft./sec.
AVERAGE GAS VOLUMETRIC FLOW RATE, STACK COND.	165,940	ACFM
AVERAGE GAS VOLUMETRIC FLOW RATE, STAND. COND.	122,030	DSCFM
AVERAGE GAS VOLUMETRIC FLOW RATE, STAND. COND.	7,321,770	DSCFH
PERCENT EXCESS AIR	******	%
MOLECULAR WEIGHT OF THE STACK OF GAS, DRY BASIS, Md	28.8680	lb./lb. mole
MOLECULAR WEIGHT OF THE STACK OF GAS, WET BASIS, Ms	27.8696	lb./lb. mole
STACK GAS SPECIFIC GRAVITY (AIR = 1,000)	.963	
ISOKINETIC VARIANCE, .90 <= IKV <= 1.10	1.02	

*STANDARD CONDITIONS = 68 °F, 29.92 in. hg.

MOSTARDI-PLATT ASSOCIATES INC.

TEST SUPPORT DATA

PROJECT #: 21511 TEST RUN #: 3
TEST DATE: 7/17/92

CUSTOMER: A.E. STALEY MANUFACTURING CO.

PLANT: LOUDEN, TENNESSEE

TEST LOC: SPRAY DRYER STACK

CLIENT: A.E. STALEY MANUFACTURING CO.

OPERATOR: S.BURTON/E.PETERSON

CONTROL BOX: E-12

METER #: E-12

METER CALIBRATION FACTOR: .997

PITOT ID #:

PITOT TUBE COEFFCIENT: .840

PORT LENGTH: 6 in.

PORT SIZE: 4 in.

PORT TYPE: NIPPLE

BAROMETRIC PRESSURE in. Hg. : 28.95

FLUE PRESSURE in. H20 : -.30

FLUE PRESSURE in. Hg. abs: 28.93

PROBE LENGTH: 5.5 ft.

PROBE LINER MATERIAL: 316 SS

NOZZLE IDENTIFICATION #:

CALIBRATED NOZZLE DIAMETER: .301 in.

LEAK CHECK ..PRE: .010 POST: .005 @ 12.000 in. Hg.

DUCT SHAPE: CIRCULAR

DUCT AREA: 95.03 sq.ft.

TEST LENGTH: 60.00 min.

MINUTES PER PORT: 2.50

TOTAL NUMBER OF TRAVERSE POINTS: 24

MOSTARDI-PLATT ASSOCIATES INC.

PARTICULATE TEST DATA SHEET
SPRAY DRYER STACK

PROJECT # 21511 TEST DATA RUN # 3 RUN DATE: 7/17/92

PORT POINT NUMBER	CHG (▲P) in. H2O	SQUARE ROOT (▲P)	TIME 24 HR. CLOCK	Vm (Cubic) (ft.)	ORIFICE CHG (▲H) in. H2O	STACK TEMP Ts °F	METER TEMP Tm	
							INLET °F	OUTLET °F
1.01	.240	.4899	1000	91.34	1.820	169.00	81.00	80.00
1.02	.270	.5196	1003	93.23	2.050	172.00	83.00	80.00
1.03	.290	.5385	1005	95.20	2.200	171.00	84.00	82.00
1.04	.300	.5477	1008	97.17	2.270	171.00	84.00	82.00
1.05	.270	.5196	1010	99.21	2.050	171.00	86.00	82.00
1.06	.240	.4899	1013	101.19	1.820	171.00	86.00	82.00
			1015	102.94				
2.01	.220	.4690	1018	102.94	1.670	172.00	85.00	81.00
2.02	.240	.4899	1021	104.77	1.820	172.00	86.00	81.00
2.03	.280	.5292	1023	106.63	2.120	171.00	86.00	82.00
2.04	.300	.5477	1026	108.63	2.270	172.00	87.00	82.00
2.05	.260	.5099	1028	110.70	1.970	171.00	87.00	82.00
2.06	.230	.4796	1031	112.60	1.740	171.00	87.00	82.00
			1033	114.37				
3.01	.140	.3742	1037	114.37	1.060	170.00	86.00	81.00
3.02	.160	.4000	1040	115.80	1.210	170.00	88.00	81.00
3.03	.150	.3873	1042	117.30	1.140	170.00	88.00	82.00
3.04	.170	.4123	1045	118.70	1.290	170.00	88.00	82.00
3.05	.170	.4123	1047	120.30	1.290	170.00	89.00	82.00
3.06	.160	.4000	1050	121.84	1.210	170.00	89.00	82.00
			1052	123.35				
4.01	.160	.4000	1053	123.35	1.210	171.00	87.00	82.00
4.02	.160	.4000	1056	124.90	1.210	171.00	87.00	82.00
4.03	.170	.4123	1058	126.39	1.290	171.00	89.00	82.00
4.04	.170	.4123	1101	127.90	1.290	170.00	89.00	82.00
4.05	.170	.4123	1103	129.45	1.290	170.00	89.00	82.00
4.06	.170	.4123	1106	130.95	1.290	170.00	89.00	83.00
			1108	132.52				

MOSTARDI-PLATT ASSOCIATES INC.

PARTICULATE TEST DATA SHEET
SPRAY DRYER STACK

PROJECT # 21511 TEST DATA RUN # 3 RUN DATE: 7/17/92

PORT POINT NUMBER	CHG (▲P) in. H2O	SQUARE ROOT (▲P)	TIME 24 HR. CLOCK	Vm (Cubic) (ft.)	ORIFICE CHG (▲H) in. H2O	STACK TEMP Ts °F	METER TEMP Tm	
							INLET °F	OUTLET °F

	132.52	TOTAL VOLUME CHANGE
	- 91.34	LESS INITIAL METER VOLUME
	- 0.00	LESS VOLUME DRAWN DURING PORT CHANGE
TOTAL TEST VOLUME ...	41.19	

30 SUMMARY

	SQ. ROOT(▲P)	Vm	CHG (▲H)	Ts	INLET + OUTLET AVG. Tm
TOTAL	10.966	41.19	38.58	4097	2021
AVERAGE	.4569	——	1.607	170.7	84.2

MOSTARDI-PLATT ASSOCIATES INC.

ADDITIONAL INPUTS PARTICULATE ANALYSIS
SPRAY DRYER STACK

PROJECT # 21511
RUN # 3

ORSAT ANALYSIS

% CO2	% O2
.50	20.10
.50 %	20.10 % ....AVERAGE PERCENTAGES

[SILICA GEL FINAL WT. 240.9 gm.] - [SILICA GEL INITIAL WT. 231.9 gm.] = 9.0
[FINAL IMPINGER H2O 284.0 ml.] - [INITIAL IMPINGER H2O 200.0ml.] = 84.0

TOTAL 93.0

ACETONE BLANK RESIDUE WT. = .0004 ml.
ACETONE BLANK VOLUME = 100.0000 ml.
ACETONE WASH VOLUME = 160.0000 ml.

$$\text{ACETONE BLANK} = \frac{\text{WASH VOLUME}}{\text{BLANK VOLUME}} \times \text{BLANK RESIDUE} = .0006$$

MOSTARDI-PLATT ASSOCIATES INC.

ADDITIONAL INPUTS PARTICULATE ANALYSIS
SPRAY DRYER STACK

PROJECT # 21511
RUN # 3

ITEM	FINAL WT.	-	INITIAL WT.	=	NET WT.	
FILTER 988	.7962		.7962		0.0000	
ACETONE WASH	7.5905		7.5848		.0057	
					.0057	TOTAL NET WT.
				-	.0006	LESS ACETONE BLANK
			TOTAL		.0051	

MOSTARDI-PLATT ASSOCIATES INC.

PROJECT # 21511

PARTICULATE TEST RUN # 3 RESULTS SUMMARY
SPRAY DRYER STACK

7/17/92

PARTICULATE CONCENTRATION @ STACK COND., Cacf	0.0015	GR/ACF
PARTICULATE CONCENTRATION @ DRY STAND. COND., Cs	0.0020	GR/SCFD
PARTICULATE CONCENTRATION, E	2.0847	Lbs/hr.
BAROMETRIC PRESSURE, Pbar	28.95	in. Hg.
AVERAGE FLUE GAS PRESSURE, Ps	28.93	in. Hg.
AVERAGE FLUE GAS TEMPERATURE, Ts	631	°R
AVERAGE METER TEMPERATURE, Tm	544	°R
TOTAL METER VOLUME, Vm	41.185	cu. ft.
TOTAL METER VOLUME @ STAND. COND., Vm(STD)	38.690	cu. ft
TOTAL WATER VAPOR @ STAND. COND., Vw(STD)	4.38	cu. ft.
WATER VAPOR IN GAS STREAM PROPORTIONED BY VOLUME, Bws	0.1016	
AVERAGE CARBON DIOXIDE CONTENT OF GAS, CO2	.50	%
AVERAGE OXYGEN CONTENT OF GAS, 02	20.10	%
AVERAGE NITROGEN CONTENT OF GAS, N2	79.40	%
MOISTURE CORRECTION FACTOR, (1-Bws)	0.8984	
AVERAGE GAS VELOCITY, Vs	29.07	ft./sec.
AVERAGE GAS VOLUMETRIC FLOW RATE, STACK COND.	165,753	ACFM
AVERAGE GAS VOLUMETRIC FLOW RATE, STAND. COND.	120,523	DSCFM
AVERAGE GAS VOLUMETRIC FLOW RATE, STAND. COND.	7,231,407	DSCFH
PERCENT EXCESS AIR	******	%
MOLECULAR WEIGHT OF THE STACK OF GAS, DRY BASIS, Md	28.8840	lb./lb. mole
MOLECULAR WEIGHT OF THE STACK OF GAS, WET BASIS, Ms	27.7777	lb./lb. mole
STACK GAS SPECIFIC GRAVITY (AIR = 1,000)	.960	
ISOKINETIC VARIANCE, .90 <= IKV <= 1.10	1.03	

*STANDARD CONDITIONS = 68 °F, 29.92 in. hg.

CALIBRATION PROCEDURES

PITOT TUBES

The pitot tubes used during this test program are fabricated according to the specification described and illustrated in the Code of Federal Regulations, Title 40, Part 60, Appendix A, Methods 1 through 5 as published in the Federal Register, Volume 42, No. 160; hereafter referred to by the appropriate method number. The pitot tubes comply with the alignment specifications in Method 2, Section 4; and the pitot tube assemblies are in compliance with specifications in the same section.

Pitot tube assemblies are calibrated in accordance with Method 2, Section 4, against a standard hemispherical pitot utilizing a wind tunnel meeting the specification in Method 2, Section 4.1.2.

NOZZLES

The nozzles are measured according to Method 5, Section 5.1.

TEMPERATURE SENSING DEVICES

The potentiometer and thermocouples are calibrated against a mercury thermometer in a calibration well. Alternatively, readings are checked utilizing a NBS traceable millivolt source.

DRY GAS METERS

The test meters are calibrated according to Method 5, Section 5.3 and "Procedures for Calibrating and Using Dry Gas Volume Meters as Calibration Standards" by P.R. Westlin and R.T. Shigehara, March 10, 1978.

ANALYTICAL BALANCE

The accuracy of the analytical balance is checked with Class S, Stainless Steel Type 303 weights manufactured by F. Hopken and Son, Jersey City, New Jersey.

NOZZLE CALIBRATION

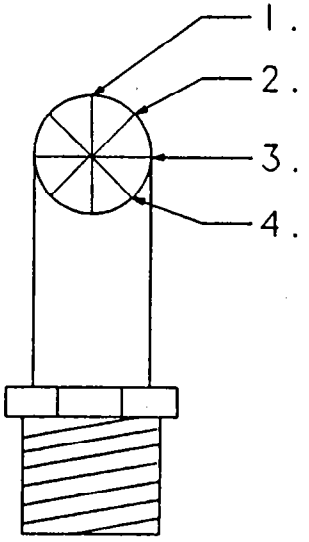

Company A.E. Stoley

Date 7/17/92

Nominal Diameter	.150	.175	.200	.220	.250	.275	.300	.375	.500	Other
MEASURED 1.										
2.										
3.										
4.										
Measured Average							0.301			

STACK TEMPERATURE SENSOR CALIBRATION DATA FORM

(For K-Type Thermocouple Calibration Only)

Date 10/28/91 Thermocouple number E12

Ambient temperature 85 °F Barometric pressure _____ in. Hg

Calibrator DW Reference: mercury-in-glass 85° ASTM °F

other _____

(K-Type Millivolts) Reference point number[a]	Source[b] (specify)	Reference thermometer temperature, °F	Thermocouple potentiometer temperature, °F	Temperature difference,[c] %
0.397	MILLIVOLT POTENTIOMETER	50	49	-0.196
1.520		100	99	-0.178
2.666		150	150	0.000
3.819		200	201	0.152
4.964		250	252	0.282
6.092		300	302	0.263
7.205		350	351	0.123
8.314		400	400	0.000
9.430		450	450	0.000
10.560		500	500	0.000
11.702		550	551	0.099
12.854		600	602	0.189
14.013		650	652	0.180
15.178		700	702	0.172
17.523		800	801	0.079
19.883		900	901	0.074
22.251		1000	1002	0.137
24.618		1100	1102	0.128
26.975		1200	1202	0.137
31.629		1400	1400	0.000
36.166		1600	1600	0.000

[a] Every (50°F) for each reference point.

[b] Type of calibration system used.

[c] $\left[\frac{(\text{ref temp, °F} + 460) - (\text{test thermom temp, °F} + 460)}{\text{ref temp, °F} + 460}\right] 100 \leq 1.5\%$.

METER BOX CALIBRATION DATA

Dry Gas Meter No. E12 Date 6/5/92 Calibrated By PC
Standard Meter No. 6847886 Yr =0.9957 Barometric Pressure, in. Hg (Pb): 29.49 - 0.65 = 28.84

Run No	Orifice Setting in. H_2O Chg(H)	Gas Volume, ft^3 Standard Meter (V_r)	Gas Volume, ft^3 Dry Gas Meter (V_d)	Pressure in. H_2O Standard Meter (P_r)	Meter Temperature, °F Standard Meter (t_r)	Meter Temperature, °F Dry Gas Meter Inlet (t_{di})	Meter Temperature, °F Dry Gas Meter Outlet (t_{do})	Meter Temperature, °F Dry Gas Meter Avg (t_d)	Time min.	Time sec.	Y	Chg(H@) in. H_2O
		25.976	34.853									
		19.567	28.390									
1	0.25	6.409	6.463	0.00	75	80	78	79.0	21	54	0.994	1.719
		36.065	45.038									
		26.090	34.960									
2	0.45	9.975	10.078	0.00	74	82	80	81.0	27	7	0.997	1.943
		48.471	57.654									
		36.185	45.158									
3	0.65	12.286	12.496	0.00	74	84	82	83.0	28	18	0.994	2.008
		62.954	72.355									
		48.598	57.778									
4	0.90	14.356	14.577	0.00	74	86	83	84.5	28	17	0.998	2.028
		75.560	85.131									
		63.094	72.499									
5	1.30	12.466	12.632	0.00	74	88	84	86.0	21	38	1.001	2.267
		85.914	95.647									
		75.775	85.346									
6	1.90	10.139	10.301	0.00	74	89	84	86.5	14	25	0.998	2.222

AVERAGE 0.997 2.031

MOSTARDI-PLATT
ASSOCIATES, INC.

Analytical Balance Calibration Form

Identification: Torbal Model EA-1, Serial No. 168491
Classification of standard weights: Class S calibrated 6/23/92

Date	Time	100.0000 g	2.0000 g	0.5003 g	Analyst
07-23.92	9:00	100.0000	2.0000	0.5004	E V
07-23-92	12:45	100.0003	2.0000	0.5005	A.B.
07-23-92	1:10	100.0004	2.0000	0.5004	T.R.
07-24-92	8:40	100.0003	2.0000	0.5004	A.B.
07-27-92	11:30	100.0002	2.0000	0.5005	I.P.
7-27-92	13:40	100.0002	2.0000	0.5004	E.V.
7-27-92	16:00	100.0004	2.0000	0.5005	I.P.
7-28-92	8:45	100.0001	2.0000	0.5004	I.P.
7-30-92	8:50	100.0001	2.0000	0.5005	I.P.
7-31-92	11:45	100.0003	2.0000	0.5005	I.P.
7-31-92	14:30	100.0002	2.0000	0.5005	I.P.
8-3-92	8:00	100.0002	2.0000	0.5004	A.B.
8-4-92	9:50	100.0000	2.0000	0.5004	E.V.
8-4-92	12:40	100.0003	2.0000	0.5005	A.B.
8-5-92	9:30	100.0003	2.0000	0.5004	E.V
8-5-92	2:30	100.0004	2.0000	0.5004	I.P.
8-5-92	3:15	100.0004	2.0000	0.5005	T.R.
8-6-92	8:25	100.0002	2.0000	0.5005	A.B.
8-6-92	7:30	100.0002	2.0000	0.5005	A.B.
8-7-92	9:50	100.0001	2.0000	0.5004	E.V.
8-7-92	3:50	100.0004	2.0000	0.5002	I.P.
8-10-92	10:20	100.0003	2.0000	0.5005	I.P.
8-10-92	1:50	100.0004	2.0000	0.5005	I.P.

Note: Each weight must be within 0.5 mg of the mass obtained after calibration on 6/23/92 to continue analysis.

21941

MOSTARDI-PLATT ASSOCIATES, INC.

TEST SUPPORT DATA

TEST RUN NO. 1

COMPANY A.E. STALEY
PLANT LOUDON TN
TEST LOCATION SPRAY DRYER - STACK
CLIENT A.E. STALEY
OPERATOR S.B / E.P.
DATE 7-17-92
CONTROL BOX E-12 POT. NO. —
METER NO. E-12
METER CALIBRATION FACTOR .997
PITOT ID NO.
PITOT TUBE COEFFICIENT .840
PORT LENGTH 6 in.
PORT SIZE 4 in.
PORT TYPE Nipple
IMPINGER H_2O: SILICA GEL:
FINAL 280 ml/gm FINAL WT. 255.8 gm
INITIAL 200 ml/gm INITIAL WT. 244.2 gm
GAIN 80 ml/gm WT. GAIN 11.6 gm
TOTAL H_2O COLLECTED 91.6
DESCRIPTION OF IMPINGER H_2O
POST
SILICA GEL EXHAUSTED ?
IMPINGERS RECOVERED BY
SILICA GEL WEIGHED BY

COMMENTS & NOTES:

THIMBLE NO. — TARE WT. —
FILTER NO. 977 TARE WT. 0.8059
BAROMETRIC PRESSURE in. Hg 28.95
FLUE PRESSURE in. H_2O -.30"
FLUE PRESSURE in. Hg ABS. 28.93
PROBE LENGTH 5.5 ft.
PROBE LINER MATERIAL 316 S.S.
NOZZLE IDENTIFICATION NO.
CALIBRATED NOZZLE DIAMETER .301 in.
LEAK CHECK PRE .005 POST .002 @ 12/10 in. Hg
DUCT SHAPE Circular DIAMETER 11'
DUCT AREA 95.033 sq. ft. L W
TEST LENGTH 60 min.
MINUTES PER POINT 2.5.
TOTAL NUMBER OF TRAVERSE POINTS 24
GAS ANALYSIS (ORSAT/FYRITE):
CO_2 .4
O_2 20.2

PITOT LEAK CHECK: PRE ✓OK

ΔH@ 2.031
SAMPLES REMOVED FROM SITE BY

For computer data entry: Supervisor, please complete.
Do you want to enter a fuel analysis? Y ☐ N ☒
What value do you want to use? F = 9,780 F_c = 1,800 Other =
Circle to indicate "Yes" or add other value if not given.

PC 07-17-92

Form No. 1053 [Rev. 3/92]

Mostardi-Platt Associates, Inc.

FIELD TEST DATA SHEET
FOR ISOKINETIC SAMPLING

MOSTARDI-PLATT ASSOCIATES, INC.

PROJECT A.E. STALEY - LOUDON TN.

TEST RUN NO. 1

TEST LOCATION SPRAY DRYER STACK DATE 7-17-92 PAGE 1 OF 2

Port-Point No.	Velocity Head (P) in. H_2O	$\sqrt{P}$	Clock Time 24 hr.	Meter Volume (Vm) ft^3 (905.865)	Orifice (H) in. H_2O (8.13)	Stack Temp. (t_s) °F	Meter Temp. (t_m) Inlet °F	Meter Temp. (t_m) Outlet °F	Meter Rate cfm (1.55)	Pump Vacuum in. Hg	Notes (x 2.5)	Probe Temp. °F	Filter Holder Temp. °F	Impgr. Outlet Temp. °F
1-1	.24	.632	6:25	5.865	2.064	170	79	76	.980	2.0		263	265	
-2	.27	.520	6:27.5	8.400	2.20	172	79	76	.805	2.0	8.316	262	266	fully
-3	.30	.548	6:30	10.280	2.44	172	80	76	.849	2.0	10.330	262	266	
-4	.32	.566	6:32.5	12.390	2.60	172	82	76	.877	2.0	12.452	265	263	iced
-5	.27	.520	6:35	14.600	2.20	171	83	76	.805	2.0	14.644	264	262	
-6	.22	.469	6:37.5	16.625	1.79	167	85	77	.727	2.0	16.658	264	263	<68°
			6:40	18.455							18.476			
		.543			2.22	171	73							
2-1	.19	.436	6:42	18.455	1.54	168	84	77	.676	2.0		264	261	
-2	.22	.469	6:44.5	20.220	1.79	169	86	77	.727	2.0	20.165	265	260	
-3	.27	.520	6:47	21.990	2.20	171	86	77	.805	2.0	21.983	265	260	
-4	.32	.566	6:49.5	24.020	2.59	171	86	78	.877	2.0	23.997	266	262	
-5	.30	.548	6:52	26.200	2.44	171	87	78	.849	2.0	26.189	267	264	
-6	.27	.520	6:54.5	28.345	2.20	172	87	78	.805	2.0	28.313	267	265	
			6:57	30.410							30.327			
		.510			2.13	170	82							

40

Form No. 1026 [Rev. 3/92]

DC 07-17-92

Mostardi-Platt Associates, Inc.

FIELD TEST DATA SHEET
FOR ISOKINETIC SAMPLING

MOSTARDI-PLATT ASSOCIATES, INC.

PROJECT A.E. STALEY - LOUDON TN

TEST RUN NO. 1

TEST LOCATION SPRAY DRYER STACK DATE 7-17-92 PAGE 2 OF 2

Port-Point No.	Velocity Head (P) in. H_2O	$\sqrt{P}$	Clock Time 24 hr.	Meter Volume (Vm) ft^3	8.13 Orifice (H) in. H_2O	Stack Temp. (t_s) °F	Meter Temp. (t_m) Inlet °F	Meter Temp. (t_m) Outlet °F	1.55 Meter Rate cfm	Pump Vacuum in. Hg	x 2.5 Notes	Probe Temp. °F	Filter Holder Temp. °F	Impgr. Outlet Temp. °F
3-1	.16	.400	700	30.410	1.30	171	84	78	.620	2.0		264	265	
-2	.18	.424	702.5	31.995	1.46	171	84	78	.658	2.0	31.960	260	266	fully
-3	.20	.447	705	33.775	1.63	171	85	78	.693	2.0	33.604	260	266	
-4	.22	.469	707.5	35.420	1.79	171	86	79	.727	2.0	35.337	261	263	iced
-5	.18	.424	710	37.125	1.46	171	87	79	.658	2.0	37.155	263	261	
-6	.17	.412	712.5	38.850	1.38	171	87	79	.639	2.0	38.800	263	261	L68
			715	40.425							40.397			
		.429			1.50	171	82							
4-1	.17	.412	718	40.425	1.38	169	82	79	.639	2.0		262	264	
-2	.17	.412	720.5	42.035	1.38	170	86	79	.639	2.0	41.995	262	264	
-3	.16	.400	723	43.625	1.30	170	87	79	.620	2.0	43.593	263	265	
-4	.18	.424	725.5	45.160	1.46	170	88	79	.658	2.0	45.143	263	266	
-5	.12	.346	728	46.820	.976	170	89	79	.537	2.0	46.787	262	266	
-6	.12	.346	730.5	48.150	.976	170	89	79	.537	2.0	48.129	262	266	
			733	49.500							49.472			
	=	.468		43.635	1.77	171	80	—						

DC 07-17-92

MOSTARDI-PLATT ASSOCIATES, INC.

TEST SUPPORT DATA

TEST RUN NO. 2

COMPANY A.E STALEY-
PLANT LOUDON TN.
TEST LOCATION SPRAY DRYER STACK
CLIENT A.E. STALEY
OPERATOR SB / E.D.
DATE 7-17-92
CONTROL BOX E-12 POT. NO. —
METER NO. E-12
METER CALIBRATION FACTOR .997
PITOT ID NO.
PITOT TUBE COEFFICIENT .840
PORT LENGTH 6 in.
PORT SIZE 4 in.
PORT TYPE NIPPLE

IMPINGER H_2O: SILICA GEL:
FINAL 274 ml/gm FINAL WT. 232.6 gm
INITIAL 200 ml/gm INITIAL WT. 222.9 gm
GAIN 74 ml/gm WT. GAIN 9.7 gm
TOTAL H_2O COLLECTED 83.7
DESCRIPTION OF IMPINGER H_2O
POST
SILICA GEL EXHAUSTED ?
IMPINGERS RECOVERED BY
SILICA GEL WEIGHED BY

COMMENTS & NOTES:

THIMBLE NO. — TARE WT. —
FILTER NO. 987 TARE WT. 0.7947
BAROMETRIC PRESSURE in. Hg 28.95
FLUE PRESSURE in. H_2O -.30"
FLUE PRESSURE in. Hg ABS. 28.93
PROBE LENGTH 5.5 ft.
PROBE LINER MATERIAL 316 S.S.
NOZZLE IDENTIFICATION NO. —
CALIBRATED NOZZLE DIAMETER .301 in
LEAK CHECK PRE .005 POST .005 @ 12/12 in. H
DUCT SHAPE Circular DIAMETER 111
DUCT AREA 95.033 sq. ft. L W
TEST LENGTH 60 min.
MINUTES PER POINT 2.5
TOTAL NUMBER OF TRAVERSE POINTS 24
GAS ANALYSIS (ORSAT/FYRITE):
CO_2 .4
O_2 20.1

PITOT LEAK CHECK: PRE OK

ΔH@ 2.031
SAMPLES REMOVED FROM SITE BY

For computer data entry: Supervisor, please complete.
Do you want to enter a fuel analysis? Y ☐ N ☒
What value do you want to use? F = 9,780 F_c = 1,800 Other =
Circle to indicate "Yes" or add other value if not given.

DC 07-17-92

FIELD TEST DATA SHEET
FOR ISOKINETIC SAMPLING

MOSTARDI-PLATT ASSOCIATES, INC.

OJECT A.E. STALEY - LOUDON TN

ST RUN NO. 2

ST LOCATION SPRAY DRYER STACK DATE 7-17-92 PAGE 1 OF 2

Port-Point No.	Velocity Head (P) in. H_2O	$\sqrt{P}$	Clock Time 24 hr.	Meter Volume (Vm) ft^3	7.58 Orifice (H) in. H_2O	Stack Temp. (t_s) °F	Meter Temp. (t_m) Inlet °F	Meter Temp. (t_m) Outlet °F	1.5 Meter Rate cfm	Pump Vacuum in. Hg	x2.5 Notes	Probe Temp. °F	Filter Holder Temp. °F	Impgr. Outlet Temp. °F
-1	.17	.412	803	49.779	1.29	169	79	77	.618	2.0		263	262	
-2	.17	.412	805.5	51.340	1.29	170	82	78	.618	2.0	51.325	263	262	full
-3	.15	.387	808	52.885	1.14	170	83	78	.581	2.0	52.870	264	263	
-4	.15	.387	810.5	54.365	1.14	170	83	78	.581	2.0	54.323	265	260	iced
-5	.15	.387	813	55.796	1.14	170	83	76	.581	2.0	55.776	262	261	
-6	.12	.346	815.5	57.320	.910	170	85	78	.520	2.0	57.229	263	263	68°
			818	58.600							58.528			
		.389			1.15	170	80							
-1	.16	.400	819	58.600	1.21	170	84	78	.600	2.0		264	266	
-2	.16	.400	821.5	60.125	1.21	170	85	78	.600	2.0	60.028	266	261	
-3	.18	.424	824	61.600	1.36	170	86	78	.636	2.0	61.528	264	264	
-4	.18	.424	826.5	63.145	1.36	171	86	79	.636	2.0	63.119	266	261	
-5	.18	.424	829	64.740	1.36	171	86	79	.636	2.0	64.709	261	263	
-6	.18	.424	831.5	66.330	1.36	171	87	79	.636	2.0	66.299	262	262	
			834	67.902							67.889			
		.416			1.31	171	82							

FIELD TEST DATA SHEET
FOR ISOKINETIC SAMPLING

MOSTARDI-PLATT ASSOCIATES, INC.

PROJECT A.E. STALEY - LOUDON TN

TEST RUN NO. 2

TEST LOCATION SPRAY DRYER STACK DATE 7-17-92 PAGE 2 OF 2

Port-Point No.	Velocity Head (P) in. H_2O	$\sqrt{P}$	49.779 Clock Time 24 hr.	Meter Volume (Vm) ft^3	7.58 Orifice (H) in. H_2O	Stack Temp. (t_s) °F	Meter Temp. (t_m) Inlet °F	Meter Temp. (t_m) Outlet °F	1.5 Meter Rate cfm	Pump Vacuum in. Hg	x 25. Notes	Probe Temp. °F	Filter Holder Temp. °F	Impgr. Outlet Temp. °F
3-1	.24	.490	836	67.902	1.82	170	84	79	.735	2.0		260	262	
-2	.22	.469	838.5	69.749	1.67	170	86	79	.763	2.0	69.726	262	263	fully
-3	.27	.520	841	71.500	2.05	170	86	79	.779	2.0	71.485	263	262	
-4	.31	.557	843.5	73.504	2.35	171	87	79	.835	2.0	73.434	259	267	iced
-5	.29	.539	846	75.585	2.20	171	87	80	.808	2.0	75.522	261	262	
-6	.27	.520	848.5	77.580	2.05	171	87	83	.779	2.0	77.541	262	263	≤68°
			851	79.520							79.490			
		.516			2.02	171	83							
4-1	.24	.490	854	79.520	1.82	170	87	80	.735	2.0		267	258	
-2	.26	.510	856.5	81.400	1.97	171	89	80	.765	2.0	81.328	263	261	
-3	.29	.539	859	83.275	2.20	171	89	80	.808	2.0	83.240	262	264	
-4	.30	.548	901.5	85.320	2.27	171	89	80	.822	2.0	85.259	264	262	
-5	.26	.510	904	87.355	1.97	171	89	80	.765	2.0	87.313	262	264	
-6	.23	.480	906.5	89.300	1.74	171	89	80	.719	2.0	89.225	263	264	
			909	91.100							91.023			
		.477		41.921	1.25	171	83	—						

Form No. 1026 (Rev. 3/92)

DC 07-17-92

Mostardi-Platt Associates, Inc.

MOSTARDI-PLATT ASSOCIATES, INC.

TEST SUPPORT DATA

TEST RUN NO. 3

COMPANY A.E. STALEY
PLANT LOUDON TN.
TEST LOCATION SPRAY DRYER STACK
CLIENT A.E. STALEY
OPERATOR SB / E P.
DATE 7-17-92
CONTROL BOX E-12 POT. NO. —
METER NO. E-12
METER CALIBRATION FACTOR .997
PITOT ID NO.
PITOT TUBE COEFFICIENT .840
PORT LENGTH 6 in.
PORT SIZE 4 in.
PORT TYPE NIPPLE

IMPINGER H_2O: SILICA GEL:
FINAL 284 ml/gm FINAL WT. 240.9 gm
INITIAL 200 ml/gm INITIAL WT. 231.9 gm
GAIN 84 ml/gm WT. GAIN 9.0 gm
TOTAL H_2O COLLECTED 93.0
DESCRIPTION OF IMPINGER H_2O
POST
SILICA GEL EXHAUSTED ?
IMPINGERS RECOVERED BY
SILICA GEL WEIGHED BY

COMMENTS & NOTES:

THIMBLE NO. — TARE WT. —
FILTER NO. 988 TARE WT. 0.7962
BAROMETRIC PRESSURE in. Hg 28.95
FLUE PRESSURE in. H_2O - .30"
FLUE PRESSURE in. Hg ABS. 28.93
PROBE LENGTH 5.5 ft.
PROBE LINER MATERIAL 316 S.S.
NOZZLE IDENTIFICATION NO. —
CALIBRATED NOZZLE DIAMETER .301 in.
LEAK CHECK PRE .010 POST .005 @ 12/12 in. Hg
DUCT SHAPE Circular DIAMETER 111
DUCT AREA 95.033 sq. ft. L W
TEST LENGTH 60 min.
MINUTES PER POINT 2.5
TOTAL NUMBER OF TRAVERSE POINTS 24
GAS ANALYSIS (ORSAT/FYRITE):
CO_2 .5
O_2 20.1

PITOT LEAK CHECK: PRE OK

ΔH@ 2.031
SAMPLES REMOVED FROM SITE BY

For computer data entry: Supervisor, please complete.
Do you want to enter a fuel analysis? Y ☐ N ☒
What value do you want to use? F = 9,780 F_c = 1,800 Other =
Circle to indicate "Yes" or add other value if not given.

FIELD TEST DATA SHEET
FOR ISOKINETIC SAMPLING

MOSTARDI-PLATT ASSOCIATES, INC.

PROJECT A.E. STALEY - LOUDON TN.

TEST RUN NO. 3

TEST LOCATION SPRAY DRYER STACK DATE 7-17-92 PAGE 1 OF 2

Port-Point No.	Velocity Head (P) in. H_2O	$\sqrt{P}$	Clock Time 24 hr.	Meter Volume (Vm) ft^3	2.58 Orifice (H) in. H_2O	Stack Temp. (t_s) °F	Meter Temp. (t_m) Inlet °F	Meter Temp. (t_m) Outlet °F	4.5 Meter Rate cfm	Pump Vacuum in. Hg	x 2.5 Notes	Probe Temp. °F	Filter Holder Temp. °F	Impgr. Outlet Temp. °F
1-1	.24	.490	1000	91.335	1.82	169	81	80	.735	2.6		263	262	
-2	.27	.520	1002.5	93.225	2.05	172	83	80	.779	2.0	93.173	264	263	fully
-3	.29	.539	1005	95.195	2.20	171	84	82	.808	2.0	95.122	264	263	
-4	.30	.548	1007.5	97.165	2.27	171	84	82	.822	2.0	97.141	265	266	iced
-5	.27	.520	1010	99.206	2.05	171	86	82	.779	2.0	99.195	266	267	
-6	.24	.490	1012.5	101.185	1.82	171	86	82	.735	2.0	101.143	267	264	68°
			1015	102.935							102.980			
		.518			2.04	171	83							
2-1	.22	.469	1018	102.935	1.67	172	85	81	.704	2.6		262	259	
-2	.24	.490	1020.5	104.769	1.82	172	86	81	.735	2.6	104.739	263	258	
-3	.28	.529	1023	106.625	2.12	171	86	82	.794	2.0	106.577	263	262	
-4	.30	.548	1025.5	108.630	2.27	172	87	82	.822	2.0	108.561	265	260	
-5	.26	.510	1028	110.700	1.97	171	87	82	.765	2.0	110.616	261	261	
-6	.23	.480	1030.5	112.600	1.74	171	87	82	.720	2.0	112.528	260	261	
			1033	114.365							114.328			
		.504			1.93	172	84							

DC
07-17-92

FIELD TEST DATA SHEET
FOR ISOKINETIC SAMPLING

MOSTARDI-PLATT ASSOCIATES, INC.

PROJECT A.E. STALEY - LOUDON TN.

TEST RUN NO. 3

TEST LOCATION SPRAY DRYER STACK DATE 7-17-92 PAGE 2 OF 2

Port-Point No.	Velocity Head (P) in. H_2O	$\sqrt{P}$	Clock Time 24 hr.	Meter Volume (Vm) ft^3	1.58 Orifice (H) in. H_2O	Stack Temp. (t_s) °F	Meter Temp. (t_m) Inlet °F	Meter Temp. (t_m) Outlet °F	1.5 Meter Rate cfm	Pump Vacuum in. Hg	114.328 × 2.5 Notes	Probe Temp. °F	Filter Holder Temp. °F	Impgr. Outlet Temp. °F
3-1	.14	.374	1037	114.365	1.06	170	86	81	.561	2.0		263	259	
-2	.16	.400	1039.5	115.795	1.21	170	88	84	.600	2.0	115.768	262	259	fully
-3	.15	.387	1042	117.300	1.14	170	88	82	.581	2.0	117.268	264	261	
-4	.17	.412	1044.5	118.709	1.29	170	88	82	.618	2.0	118.720	264	262	iced
-5	.17	.412	1047	120.300	1.29	170	89	82	.618	2.0	120.766	263	263	
-6	.16	.400	1049.5	121.835	1.21	170	89	82	.600	2.0	121.811	260	260	≤68°
			1052	123.350							123.371			
		.398			1.20	170	85							
4-1	.16	.400	1053	123.350	1.21	171	87	82	.600	2.0		258	261	
-2	.16	.400	1055.5	124.900	1.21	171	87	82	.600	2.0	124.811	257	263	
-3	.17	.412	1058	126.385	1.29	171	89	82	.618	2.0	126.311	260	263	
-4	.17	.412	1100.5	127.895	1.29	170	89	82	.618	2.0	127.857	261	264	
-5	.17	.412	1103	129.445	1.29	170	89	82	.618	2.0	129.402	262	263	
-6	.17	.412	1105.5	130.950	1.29	170	89	83	.618	2.0	130.947	262	263	
			1108	132.520							132.492			
	—	.457		41.185	1.61	171	84	—						

Form No. 1026 [Rev. 3/92]

DC 07-17-92

Mostardi-Platt Associates, Inc.

TENNESSEE AIR POLLUTION CONTROL DIVISION
SOURCE SAMPLING SECTION
Source Sampling Observation Report Sheet (Particulates)

Company A.E. Staley Ref. No. 53-0081-90
Source I.D. 53-0081-90 Stack spray tower system
Test Conducted by Mostardi Platt Associates
Person in Charge of Test Cal Peterson
Observer D.G. Claxton
Run Number Observed 3

Date 07-17-90 Time Test Observed 6:25 - 11:29

THIS REPORT SHEET IS AN EVALUATION OF SAMPLING PROCEDURES CONDUCTED AT THE ABOVE MENTIONED SITE. THIS EVALUATION COVERS ONLY GENERAL ITEMS OBVIOUS TO THE OBSERVER. THIS DOES NOT IN ANY WAY IMPLY THAT ALL TEST PROCEDURES ARE ACCURATE OR THAT THE TEST REPORT WILL BE ACCEPTED BY THE TAPCD. EVEN THOUGH THE FIELD PROCEDURE MAY BE ACCEPTABLE, INFORMATION PRESENTED IN THE TEST REPORT MAY RENDER THE ENTIRE TEST UNACCEPTABLE. THIS REPORT APPLIES ONLY TO THE TESTS ACTUALLY OBSERVED BY THE TAPCD OBSERVER.

PRELIMINARY DETERMINATIONS

Sampling Location	O.K.
Number of sample points	24 O.K.
Velocity traverse	24 O.K.
Method of moisture determination	M 4 (5) O.K.

SAMPLING

Leak check: pretest (specify .01)	O.K.
post test (specify .01)	O.K.
Probe tip orientation	O.K.
Filter heated to minimum temp.	O.K.
Time sampled each point	2.5 min O.K.
Accurately monitored train temps.	O.K.
Initial readings recorded	O.K.
Readings recorded if train shut down	O.K.
Final readings recorded	O.K.
Gas analysis (specify orsat)	O.K.

PROCESS INFORMATION

Engineer Present (Name [illegible])
Pretest Agreement YES

SAMPLING TRAIN

Basic Construction	O.K.
Probe Design	O.K.
Nozzle Condition	O.K.
Pitot Condition	O.K.
Filter	O.K.
Correct amt. H_2O and Silica Gel in impingers	O.K.

TRAIN BREAK-DOWN

Probe moved so as to not lose material	O.K.
Probe washed and brushed	O.K.
Acceptable container to store washings	O.K.
Reagent grade acetone used	O.K.
Blank of solutions taken	O.K.
Train re-set acceptably	O.K.

CALIBRATION DATA

Proper calibration data available at site O.K.

Observer D.G. Claxton Team Leader [signature]

Original to observer; copy to team leader (to be submitted with test report)

DARWIN CLAXTON

PH-0463

APC 8/79

TENNESSEE AIR POLLUTION CONTROL BOARD
DEPARTMENT OF ENVIRONMENT AND CONSERVATION
NASHVILLE, TENNESSEE 37243-1531

Co.

OPERATING PERMIT Issued Pursuant to Tennessee Air Quality Act

Date Issued: MAY 12 1993

Date Expires: July 1, 1997

Permit Number: 036968P

Issued To:

A. E. Staley Manufacturing Company

Installation Address:

198 Blair Bend Drive
Loudon

Installation Description:

Starch Spray Dryer System: PES 90:
90A - Rail Car Receiver; 90B - Spray Dryer;
90C & 90D - Product Bins ; 90G-Filter Receiver and 90H-Unloading Receiver
Baghouse Control

Emission Source Reference No:

53-0081-90
PSD, BACT

The holder of this permit shall comply with the conditions contained in this permit as well as all applicable provisions of the Tennessee Air Pollution Control Regulations.

CONDITIONS:

1. The operating permit application that was utilized in the preparation of this permit is dated September 30, 1992 and signed by Lauren W. Laabs, Manager, Environmental Sciences of the permitted facility. If this person terminates his/her employment or is reassigned different duties such that he/she is no longer the responsible person to represent and bind the facility in environmental permitting affairs, the new person assuming these duties shall declare himself/herself in writing by name and title to the Technical Secretary within fifteen days of the above named person's separation or reassignment of duties within the facility. Said declaration shall contain a statement of concurrence by the new person that all applications and mutual letters of agreement that were signed by the person named above still represent and accurately describe the manner in which the facility is operated or to be operated. If such declaration cannot be made because of non-compliance with a specific value in the approved application and/or any agreement letters used in the preparation of this permit, the new person shall immediately notify the Technical Secretary in writing. The notification must detail the discovered non-compliance and provide a proposed schedule of corrective action to rectify the non-compliance. This permit does not cover any air contaminant source that does not conform to the conditions of this permit and the information given in the approved application. This includes compliance with the following operating parameters:

(continued on the next page)

John H. Hatch
TECHNICAL SECRETARY

No Authority is Granted by this Permit to Operate, Construct, or Maintain any Installation in Violation of any Law, Statute, Code, Ordinance, Rule or Regulation of the State of Tennessee or any of its Political Subdivisions.

NON TRANSFERABLE

POST OR FILE AT INSTALLATION ADDRESS

MAY 12 1993

036968P

The maximum process weight rate (PWR) shall not exceed the following:

90A - Rail Receiver: 30,000 pounds per hour
90B - Starch Spray Dryer: 33,800 pounds per hour
90C & 90D - Starch Product Bins: 7,800 pounds per hour
90G- Filter Receiver Bin: 7,800 pounds per hour
90H- Unloading Receiver Bin: 30,000 pounds per hour

2. The maximum heat input rate to the natural gas burning spray dryer shall not exceed 47.5 MM BTU per hour.

3. Particulate matter emitted from this source shall not exceed the following limits:

Source	Particulate Concentration, Grains per Dry Standard Cubic foot
90A - Rail Car Receiver	0.01
90B - Starch Spray Dryer	0.005
90C & 90D - Starch Product Bins	0.01
90G- Filter Receiver Bin	0.01
90H- Unloading Receiver Bin	0.01

Regardless of the above-specified emissions limits the total amount of particulate matter emitted from this source shall not exceed 5.29 pounds per hour.

4. Visible emissions from this source shall not exceed 20 percent or greater opacity as determined by EPA Method 9, as published in the Federal Register, Volume 39, Number 219 on November 12, 1974. (6 minute average)

5. All waste materials, raw materials, and finished products shall be stored in the enclosed building(s).

6. The permittee shall apply for renewal of this permit not less than sixty (60) days prior to the permit's expiration date pursuant to Division Rule 1200-3-9-.02(3).

7. This permit supersedes any previous operating permit(s) for this source.

Emission Summary Permit No. 036968P

Source Status: New ___ Modification ___ Expansion ___ Relocation ___ Permit Status: New ___ Renewal X

PSD ___ NSPS ___ Previous Permit No.: Construction ___ Operating 035503P

	Pounds/Hour			Tons/Year			Gr/SCFM, ppm or #/MM BTU		Date Data	*	Applicab. Standard 1200-3-
	Actual	Pot.	Allow.	Actual	Pot.	Allow.	Actual	Allow.			
TSP	2.17		5.2	9.11		23			7-17-92	1	see construction permit
SO2	0.03			0.13					9-30-92	2	
CO	1.66			6.97					↓	↓	
VOC	0.14			0.588					↓	↓	
NOx	6.65			27.93					↓	↓	

* Source of data: Previous Permit 931256P and application dated 9-30-92 - stack test dated 7-17-92

Baghouse Control
↑
PES 90
Starch Spray Dryer System

53-0081-90

MEETS ___ % OPACITY YES ___ NO ___ AVERAGE % OPACITY ___ FUGITIVE DUST SATISFACTORY YES ___ NO ___

RECOMMENDED: ISSUE PERMIT ___ DENY PERMIT ___ CANCEL ___ BASIS: VISIBLE EMISSION ___ EQUIP. INSPECT. ___

ENFORCEMENT PROGRAM _____ DATE _____ _____ DATE _____

ENGINEERING PROGRAM _____ DATE _____ _____ DATE _____

TENNESSEE AIR POLLUTION CONTROL BOARD
DEPARTMENT OF ENVIRONMENT AND CONSERVATION
NASHVILLE, TENNESSEE 37243-1531

Co-File

Permit to Construct or Modify an Air Contaminant Source Issued Pursuant to Tennessee Air Quality Act

Date Issued: NOV 09 1993

Permit Number: 937517P

Date Expires: March 1, 1994

Issued To:
A. E. Staley Manufacturing Company

Installation Address:
Blair Bend Industrial Park
Loudon

Installation Description: PES 90
Starch & maltodextrin Spray Dryer System
90A-Rail Car Receiver; 90B-Spray Dryer;
90C & 90D-Product Bins; 90G-Filter Receiver Bins &
90H-Unloading Receiver Bins. Baghouse Control

Emission Source Reference No.
53-0081-90
PSD, BACT

The holder of this permit shall comply with the conditions contained in this permit as well as all applicable provisions of the Tennessee Air Pollution Control Regulations.
This is not a permit to operate.

CONDITIONS:

1. This permit does not cover any air contaminant source that does not conform to the conditions of this permit and the information given in the approved application. This includes compliance with the following operating parameters:

   The maximum process weight rate (PWR) shall not exceed the following;

   90A - Railcar Receiver: 30,000 pounds/hour.
   90B - Starch/Maltodextrin Spray Dryer: 33,800 pounds/hour
   90C & 90D - Two Product Bins: @ 15,000 pounds/hour
   90G - Filter Receiver Bin: 15,000 pounds/hour
   90H - Unloading Receiver Bin: 30,000 pounds/hour

2. Particulate matter(PM_{10}) emitted from this source shall not exceed the following:

   Spray Dryer(90B) : 0.005 grains/dscf; Railcar Receiver(90A), Two Product Bins(90C & 90D), Filter Receiver Bin(90G) and Unloading Receiver Bin(90H) : @ 0.01 grains/dscf.

   Regardless of the above-specified emission limits, the total amount of particulate matter emitted from this source shall not exceed 5.36 pounds/hour.

(continued on page 2)

John W. Walton
GRW 11/8/93
TECHNICAL SECRETARY

No Authority is Granted by this Permit to Operate, Construct, or Maintain any Installation in Violation of any Law, Statute, Code, Ordinance, Rule, or Regulation of the State of Tennessee or any of its Political Subdivisions.

NON TRANSFERABLE

POST AT INSTALLATION ADDRESS

3. Visible emissions from this source shall not exceed 20 percent or greater opacity as determined by EPA Method 9, as published in the Federal Register, Volume 39, Number 219 on November 12, 1974. (6 minute average)

4. The maximum heat input rate to the natural gas burning spray dryer and hot water heater shall not exceed 47.5 MM Btu/hr and 11.5 MM Btu/hr.

5. All waste materials, raw materials and finished products shall be stored in the enclosed building(s).

6. This permit shall serve as a temporary operating permit from initial start-up to the receipt of a standard operating permit, (regardless of the expiration date), provided the operating permit is applied for within thirty (30) days of initial start-up and the conditions of this permit and any applicable emission standards are met.

7. This permit does not cover construction which commences after one year of the date of issuance of this permit or the first construction permit which was issued for this source.

8. A log of the process material input rate, in a form that readily shows compliance with condition(s) 1, must be maintained at the source location and kept available for inspection by the Technical Secretary or his representative. This log must be retained for a period of not less than four years.

9. The issuance of this construction permit supersedes any previously issued construction permit for this air contaminant source.

10. The application that was utilized in the preparation of this permit is dated July 29, 1993 and signed by James Hoyt, Corporate Environmental Engineer of the permitted facility. If this person terminates his/her employment or is reassigned different duties such that he/she is no longer the responsible person to represent and bind the facility in environmental permitting affairs, the new person assuming these duties shall declare himself/herself in writing by name and title to the Technical Secretary within fifteen days of the above named person's separation or reassignment of duties within the facility. Said declaration shall contain a statement of concurrence by the new person that all applications and mutual letters of agreement that were signed by the person named above still represent and accurately describe the manner in which the facility is operated or to be operated. If such declaration cannot be made because of non-compliance with a specific value in the approved application and/or any agreement letters used in the preparation of this permit, the new person shall immediately notify the Technical Secretary in writing. The notification must detail the discovered non-compliance and provide a proposed schedule of corrective action to rectify the non-compliance.

STATE OF TENNESSEE
DEPARTMENT OF HEALTH + ENVIRONMENT
DIVISION OF AIR POLUTION CONTROL

4th Floor Customs House
701 Broadway
Nashville, TN 37219-5403
Telephone (615) 741-3931

PERMIT APPLICATION

JUL 29 1993

PLEASE TYPE OR PRINT AND SUBMIT IN DUPLICATE FOR EACH EMISSION SOURCE, ATTACH APPROPRIATE SOURCE DESCRIPTION FORMS.

1. ORGANIZATION'S LEGAL NAME: A. E. Staley Manufacturing Company
   APC COMPANY-POINT NO. (FOR): 53-0081-90
2. MAILING ADDRESS (ST/RD/P.O.BOX): 2200 East Eldorado Street
   APC LOG/PERMIT NO. (APC): 37517
   CITY: Decatur | STATE: IL | ZIP CODE: 62521 | PHONE WITH AREA CODE: 217-423-4611
3. PRINCIPAL TECHNICAL CONTACT: James A. Hoyt, Corporate Environmental Engineer | PHONE WITH AREA CODE: 217-421-2503
4. SITE ADDRESS (ST/RD/HWY): 198 Blair Bend Drive | COUNTY NAME: Loudon
   CITY OR DISTANCE TO NEAREST TOWN: Loudon | ZIP CODE: 37774 | PHONE WITH AREA CODE: 615-458-5081
5. EMISSION SOURCE NO. (NUMBER WHICH UNIQUELY IDENTIFIES THIS SOURCE): 90 | PERMIT RENEWAL: YES ( ), NO (X)
6. BRIEF DESCRIPTION OF EMISSION SOURCE

   Spray Dryer System Stack - system finishes maltodextrin and starch

7. TYPE OF PERMIT REQUESTED (COMPLETE ONE LINE ONLY)

	STARTING DATE	COMPLETION DATE	DATE WAIVER APPROVED (IF APPLICABLE)
CONSTRUCTION & modification of operating pmt.	ASAP		

	DATE CONSTRUCTION STARTED	DATE COMPLETED	LAST PERMIT NO.	EMISSION SOURCE REFERENCE NUMBER
OPERATING (X)			036968P	53-0081-90

	TRANSFER DATE	LAST PERMIT NO.	EMISSION SOURCE REFERENCE NUMBER
LOCATION TRANSFER ( )			

ADDRESS OF LAST LOCATION

8. DESCRIBE CHANGES THAT HAVE BEEN MADE TO THIS EQUIPMENT OR OPERATION SINCE THE LAST CONSTRUCTION OR OPERATING PERMIT APPLICATION.

   System will not only be used to finish a corn starch product, but will also be used to finish, store and package (91) a corn sweetener product, namely maltodextrin. To accomodate the new product, modification to existing conveying is proposed.

9. SIGNATURE (APPLICATION MUST BE SIGNED BEFORE IT WILL BE PROCESSED): Lauren W. Laabs | DATE: 7-28-93
10. SIGNER'S NAME (TYPE OR PRINT): Lauren W. Laabs | TITLE: Manager, Env. Sciences | PHONE WITH AREA CODE: 217-421-3218

APC 20 James A. Hoyt

PH-0425
APC 1/80

STATE OF TENNESSEE
DEPARTMENT OF HEALTH + ENVIRONMENT
DIVISION OF AIR POLUTION CONTROL

TERRA BLDG., 150 9TH AVE. N.
NASHVILLE, TN. 37219-5404
TELEPHONE (615) 741-3931

EMISSION POINT DESCRIPTION

PLEASE TYPE OR PRINT AND SUBMIT IN DUPLICATE FOR EACH STACK OR EMISSION POINT. ATTACH TO THE PERMIT APPLICATION.

1. ORGANIZATION NAME: A.E. Staley Manufacturing Company | /// | APC COMPANY-POINT NO. | FOR |

2. EMISSION SOURCE NO. (FROM APPLICATION) | FLOW DIAGRAM POINT NUMBER: | /// | APC SEQUENCE NO. | APC |

3. LOCATION:

	LATITUDE	LONGITUDE	UTM VERTICAL	UTM HORIZONTAL
Spray Dryer Stack	35°44'04"	84°19'20"	3957.6 KM	742.1KM

4. BRIEF EMISSION POINT DESCRIPTION (ATTACH A SKETCH IF APPROPRIATE): Stack for process sources 90A, 90B, 90C, 90D, 90G, 90H | DISTANCE TO NEAREST PROPERTY LINE (FT)

COMPLETE LINES 5 AND 6 IF DIFFERENT FROM THAT ON THE PROCESS OR FUEL BURNING SOURCE DESCRIPTION (APC 21)

	HOURS/DAY	DAYS/WEEK	WEEKS/YEAR	DAYS/YEAR
5. NORMAL OPERATION:	24	7	50	350

	DEC.-FEB.	MARCH-MAY	JUNE-AUG.	SEPT.-NOV.
6. PERCENT ANNUAL THROUGHPUT:	25	25	25	25

	HEIGHT ABOVE GRADE (FT)	DIAMETER (FT)	TEMPERATURE (°F)	% OF TIME OVER 125°F	DIRECTION OF EXIT (UP, DOWN, OR HORIZONTAL)
7. STACK OR EMISSION POINT DATA:	150	11	195		Up

	FLOW (ACTUAL FT3/MIN.)	VELOCITY (FT/SEC)	MOISTURE (GRAINS/FT3)	MOISTURE (PERCENT)
DATA AT EXIT CONDITIONS:	158,302	21.7		saturated
DATA AT STANDARD CONDITIONS: (70°F, 1ATM)	FLOW (DRY STD. FT3/MIN.) 128092	VELOCITY (FT/SEC) 22.5	MOISTURE (GRAINS/FT3)	MOISTURE (PERCENT)

8. AIR CONTAMINANTS — ACTUAL EMISSIONS

	EMISSIONS (LBS/HR) AVERAGE	EMISSIONS (LBS/HR) MAXIMUM	CONCENTRATION	AVG. EMISS (TONS/YR)	EMISSIONS* EST. METHOD	CONTROL DEVICES*	CONTROL EFFICIENCY %
PARTICULATES		5.36	** 0.005		3 & 6	018	greater than 99.99%
SULFUR DIOXIDE		0.03	***				
NITROGEN OXIDES		6.65	PPM				
ORGANIC COMPOUNDS		0.14	PPM				
CARBON MONOXIDE		1.66	PPM				
FLUORIDES							
OTHER (SPECIFY)							

9. CHECK TYPES OF MONITORING AND RECORDING INSTRUMENTS THAT ARE ATTACHED:
OPACITY MONITOR ( ), SO2 MONITOR ( ), NOX MONITOR ( ), OTHER (SPECIFY IN COMMENTS) ( )

10. COMMENTS: (CONTINUE ON BACK IF NEEDED)

Net increase in particulate emissions of 0.086 lb/hr.

11. SIGNATURE: Lauren W. Laabs | DATE: 7-28-93

* REFER TO THE BACK OF THE PERMIT APPLICATION FORM FOR ESTIMATION METHOD AND CONTROL DEVICE CODES.

** EXIT GAS PARTICULATE CONCENTRATION UNITS: PROCESS - GRAINS/DRY STANDARD FT3 (70°F); WOOD FIRED BOILERS - GRAINS/DRY STANDARD FT3 (70°F); ALL OTHER BOILERS - LBS/MILLION BTU HEAT INPUT.

*** EXIT GAS SULFUR DIOXIDE CONCENTRATIONS UNITS: PROCESS - PPM BY VOLUME, DRY BASES; BOILERS - LBS/MILLION BTU HEAT INPUT.

NATIONAL 42-381 50 SHEETS 5 SQUARE
42-382 100 SHEETS 5 SQUARE
42-389 200 SHEETS 5 SQUARE

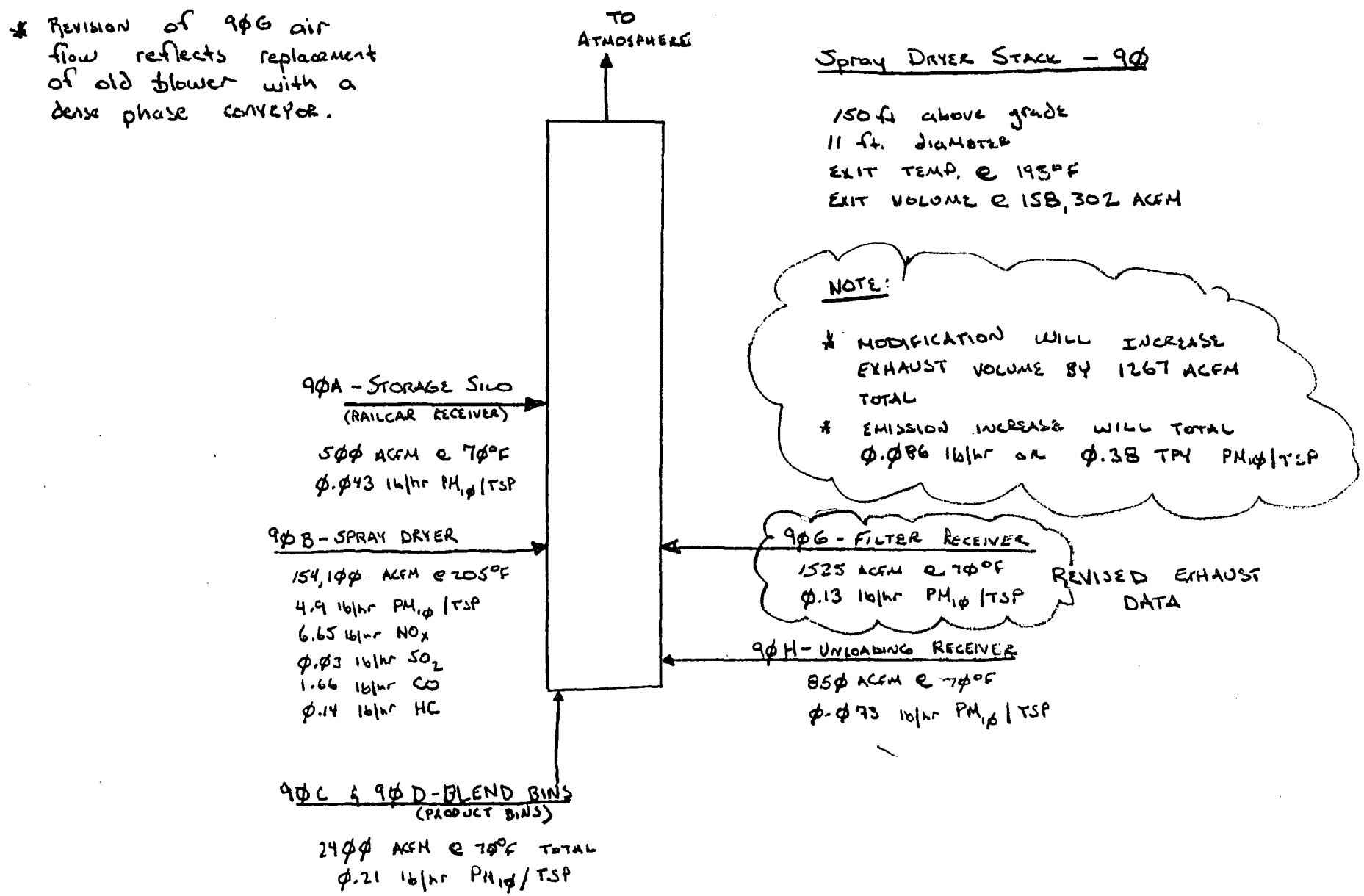

TAH | A.E. Staley Manufacturing Co | Process Flow Diagram | Spray Dryer Stack (9Ø) | 7/29/

STATE OF TENNESSEE
DEPARTMENT OF HEALTH + ENVIRONMENT
DIVISION OF AIR POLUTION CONTROL

4th Floor Customs House
701 Broadway
Nashville, TN 37219-5403
Telephone (615) 741-3931

PROCESS OR FUEL BURNING SOURCE DESCRIPTION

PLEASE TYPE OR PRINT, SUBMIT IN DUPLICATE AND ATTACH TO THE PERMIT APPLICATION.

1. ORGANIZATION NAME: A. E. STALEY MANUFACTURING COMPANY | APC COMPANY-POINT NO. (FOR)
2. EMISSION SOURCE NO. (AS ON PERMIT APPLICATION): 90A | SIC CODE: 2046 | APC PERMIT/LOG NO. (APC)
3. DESCRIPTION OF PROCESS OR FUEL BURNING UNIT

Storage Silo Bag Filter (90A)

4. NORMAL OPERATION:	HOURS/DAY	DAYS/WEEK	WEEKS/YEAR	DAYS/YEAR
	24	7	50	350

5. PERCENT ANNUAL THROUGHPUT:	DEC.-FEB.	MARCH-MAY	JUNE-AUG.	SEPT.-NOV.
	25	25	25	25

6. TYPE OF PERMIT APPLICATION (CHECK BELOW ONE ONLY)

PROCESS SOURCE: APPLY FOR A SEPARATE PERMIT FOR EACH SOURCE. (CHECK AT RIGHT, AND COMPLETE LINES 7, 8, 13, AND 14).	(X)
PROCESS SOURCE WITH IN-PROCESS FUEL: PRODUCTS OF COMBUSTION CONTACT MATERIALS HEATED. APPLY FOR A SEPARATE PERMIT FOR EACH SOURCE. (CHECK AT RIGHT, AND COMPLETE LINES 7, 8, AND 10 THROUGH 14).	( )
NON-PROCESS FUEL BURNING SOURCE: PRODUCTS OF COMBUSTION DO NOT CONTACT MATERIALS HEATED. COMPLETE THIS FORM FOR EACH BOILER OR FUEL BURNER AND COMPLETE AN EMISSION POINT DESCRIPTION FORM (APC 22) FOR EACH STACK. (CHECK AT RIGHT, AND COMPLETE LINES 9 TO 14)	( )

7. TYPE OF OPERATION: CONTINUOUS (X) BATCH ( ) | NORMAL BATCH TIME | NORMAL BATCHES/DAY

8.

PROCESS MATERIAL INPUTS AND IN-PROCESS SOLID FUELS	DIAGRAM* REFERENCE	INPUT RATES (POUNDS/HOUR) DESIGN	ACTUAL	(FOR APC USE ONLY) SCC CODE
A. Corn Starch		30,000	28,800	
B. or Maltodextrin		30,000	28,800	
C.				
D.				
E.				
F.				
G.				
	TOTALS	30,000	28,800	

* A SIMPLE PROCESS FLOW DIAGRAM MUST BE ATTACHED.

9. BOILER OR BURNER DATA: (COMPLETE LINES 9 TO 14 USING A SEPARATE FORM FOR EACH BOILER)

BOILER NUMBER	STACK NUMBER**	TYPE OF FIRING***	RATED BOILER HORSEPOWER	RATED INPUT CAPACITY (10 BTU/HR)	OTHER BOILER RATING (SPECIFY CAPACITY AND UNITS)

BOILER SERIAL NO.	DATE CONSTRUCTED	DATE OF LAST MODIFICATION (EXPLAIN IN COMMENTS BELOW).

** BOILERS WITH A COMMON STACK WILL HAVE THE SAME STACK NUMBER.

*** CYCLONE, SPREADER (WITH OR WITHOUT REINJECTION), PULVERIZED (WET OR DRY BOTTOM, WITH OR WITHOUT REINJECTION), OTHER STOKER (SPECIFY TYPE), HAND FIRED, AUTOMATIC, OR OTHER TYPE (DESCRIBE BELOW IN COMMENTS).

10. FUEL DATA. (COMPLETE FOR A PROCESS SOURCE WITH IN-PROCESS FUEL OR A NON-PROCESS FUEL BURNING SOURCE)

PRIMARY FUEL TYPE (SPECIFY)				STANDBY FUEL TYPE(S) (SPECIFY)			
FUELS USED	ANNUAL USAGE	HOURLY USAGE DESIGN	HOURLY USAGE AVERAGE	% SULFUR	% ASH	BTU VALUE OF FUEL	(FOR APC ONLY) SCC CODE
NATURAL GAS:	10 CUFT	CUFT	CUFT	//// ////	//// ////	1,000	
#2 FUEL OIL:	10 GAL	GAL	GAL		//// ////		
#5 FUEL OIL:	10 GAL	GAL	GAL		//// ////		
#6 FUEL OIL:	10 GAL	GAL	GAL		//// ////		
COAL:	TONS	LBS	LBS				
WOOD:	TONS	LBS	LBS	//// ////	//// ////		
LIQUID PROPANE:	10 GAL	GAL	GAL	//// ////	//// ////	35,000	
OTHER (SPECIFY TYPE & UNITS:							

11. IF WOOD IS USED AS A FUEL, SPECIFY TYPES AND ESTIMATE PERCENT BY WEIGHT OF BARK.

12. IF WOOD IS USED WITH OTHER FUELS, SPECIFY PERCENT BY WEIGHT OF WOOD CHARGED TO THE BURNER.

13. COMMENTS

Vents to dryer stack 0.01 gr/scf @ 500 ACFM @ 70°F.

14. SIGNATURE Lauren W. Laabs

DATE 7-28-93

NATIONAL 42-381 50 SHEETS 5 SQUARE
42-382 100 SHEETS 5 SQUARE
42-389 200 SHEETS 5 SQUARE

JAH

A.E. STALEY MFG. CO.

PROCESS FLOW DIAGRAM

MALTODEXTRIN SURGE CAPACITY

7/28/9

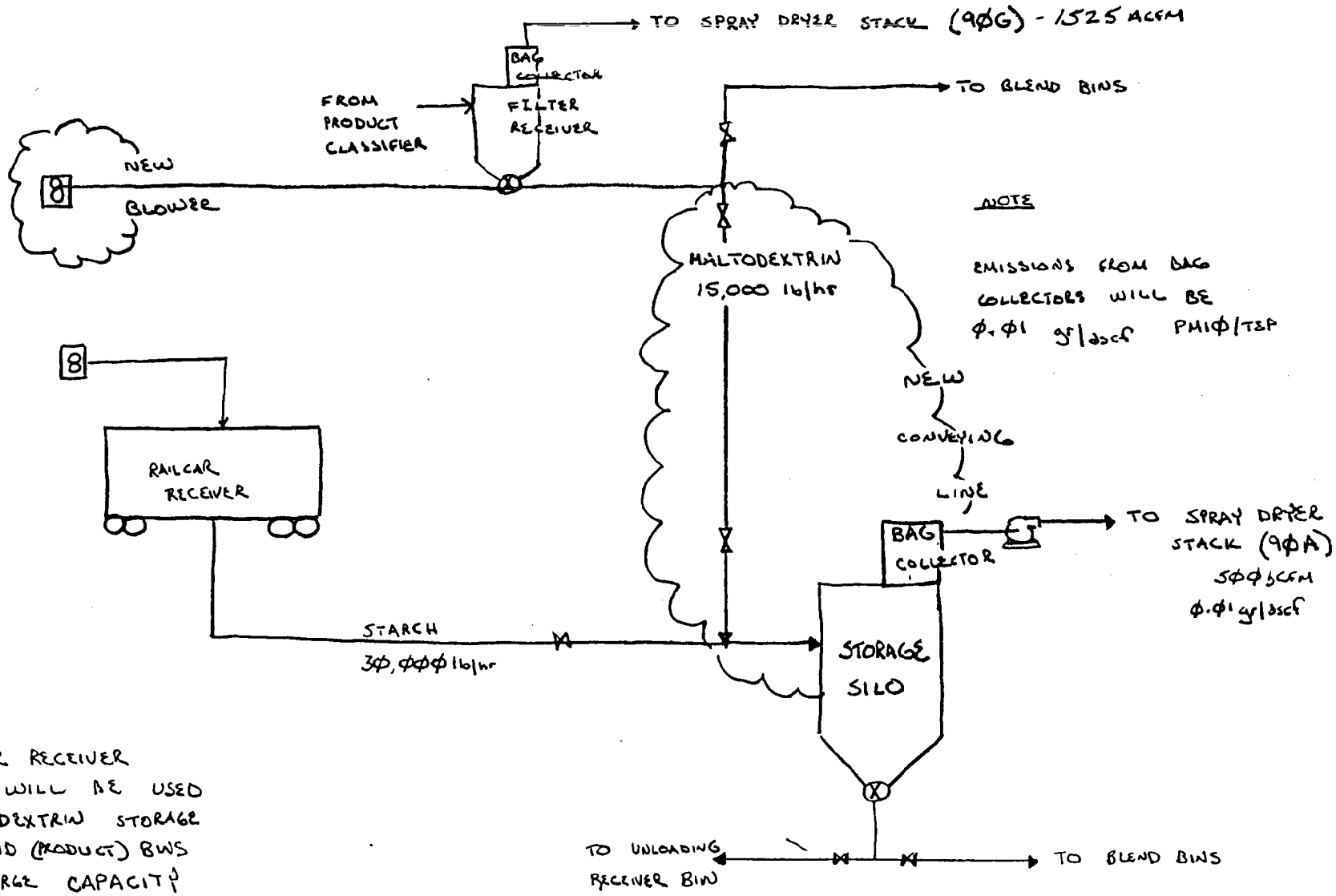

NOTES

- STARCH RAILCAR RECEIVER STORAGE SILO WILL BE USED AS A MALTODEXTRIN STORAGE DEVICE IF BLEND (PRODUCT) BINS FULL — SURGE CAPACITY
- 9ØA exhaust will be increased 5Ø scfm
- 9ØG exhaust will increase 1Ø25 scfm

STATE OF TENNESSEE
DEPARTMENT OF HEALTH + ENVIRONMENT
DIVISION OF AIR POLUTION CONTROL

4th Floor Customs House
701 Broadway
Nashville, TN 37219-5403
Telephone (615) 741-3931

PROCESS OR FUEL BURNING SOURCE DESCRIPTION

PLEASE TYPE OR PRINT, SUBMIT IN DUPLICATE AND ATTACH TO THE PERMIT APPLICATION.

1. ORGANIZATION NAME: A. E. STALEY MANUFACTURING COMPANY | APC COMPANY-POINT NO. (FOR)
2. EMISSION SOURCE NO. (AS ON PERMIT APPLICATION): 90B | SIC CODE: 2046 | APC PERMIT/LOG NO. (APC)
3. DESCRIPTION OF PROCESS OR FUEL BURNING UNIT

Spray Dryer

4. NORMAL OPERATION:	HOURS/DAY	DAYS/WEEK	WEEKS/YEAR	DAYS/YEAR
	24	7	50	350

5. PERCENT ANNUAL THROUGHPUT:	DEC.-FEB.	MARCH-MAY	JUNE-AUG.	SEPT.-NOV.
	25	25	25	25

6. TYPE OF PERMIT APPLICATION (CHECK BELOW ONE ONLY)

PROCESS SOURCE: APPLY FOR A SEPARATE PERMIT FOR EACH SOURCE. (CHECK AT RIGHT, AND COMPLETE LINES 7, 8, 13, AND 14).	( )
PROCESS SOURCE WITH IN-PROCESS FUEL: PRODUCTS OF COMBUSTION CONTACT MATERIALS HEATED. APPLY FOR A SEPARATE PERMIT FOR EACH SOURCE. (CHECK AT RIGHT, AND COMPLETE LINES 7, 8, AND 10 THROUGH 14).	(X)
NON-PROCESS FUEL BURNING SOURCE: PRODUCTS OF COMBUSTION DO NOT CONTACT MATERIALS HEATED. COMPLETE THIS FORM FOR EACH BOILER OR FUEL BURNER AND COMPLETE AN EMISSION POINT DESCRIPTION FORM (APC 22) FOR EACH STACK. (CHECK AT RIGHT, AND COMPLETE LINES 9 TO 14)	( )

7. TYPE OF OPERATION:	CONTINUOUS	BATCH	NORMAL BATCH TIME	NORMAL BATCHES/DAY
	(X)	( )		

8. PROCESS MATERIAL INPUTS AND IN-PROCESS SOLID FUELS	DIAGRAM* REFERENCE	INPUT RATES (POUNDS/HOUR) DESIGN	ACTUAL	(FOR APC USE ONLY) SCC CODE
A. Starch Slurry (22% DS)		33,800	30,100	
B. or Maltodextrin (55% DS)		26,200	26,200	or (not both)
C.				
D.				
E.				
F.				
G.				
	TOTALS	33,800	30,100	

* A SIMPLE PROCESS FLOW DIAGRAM MUST BE ATTACHED.

DS => Dry Substance

APC 21 (& 24) (OVER)

PH-0481
APC 1/30

STATE OF TENNESSEE
DEPARTMENT OF HEALTH + ENVIRONMENT
DIVISION OF AIR POLUTION CONTROL

4th Floor Customs House
701 Broadway
Nashville, TN 37219-5403
Telephone (615) 741-3931

PROCESS OR FUEL BURNING SOURCE DESCRIPTION

PLEASE TYPE OR PRINT, SUBMIT IN DUPLICATE AND ATTACH TO THE PERMIT APPLICATION.

1. ORGANIZATION NAME: A. E. STALEY MANUFACTURING COMPANY | /// | APC COMPANY-POINT NO. | FOR |

2. EMISSION SOURCE NO. (AS ON PERMIT APPLICATION): 90B | SIC CODE: 2046 | /// | APC PERMIT/LOG NO. | APC |

3. DESCRIPTION OF PROCESS OR FUEL BURNING UNIT

Spray Dryer

4. NORMAL OPERATION:	HOURS/DAY	DAYS/WEEK	WEEKS/YEAR	DAYS/YEAR
	24	7	50	350

5. PERCENT ANNUAL THROUGHPUT:	DEC.-FEB.	MARCH-MAY	JUNE-AUG.	SEPT.-NOV.
	25	25	25	25

6. TYPE OF PERMIT APPLICATION (CHECK BELOW ONE ONLY)

PROCESS SOURCE: APPLY FOR A SEPARATE PERMIT FOR EACH SOURCE. (CHECK AT RIGHT, AND COMPLETE LINES 7, 8, 13, AND 14).	( )
PROCESS SOURCE WITH IN-PROCESS FUEL: PRODUCTS OF COMBUSTION CONTACT MATERIALS HEATED. APPLY FOR A SEPARATE PERMIT FOR EACH SOURCE. (CHECK AT RIGHT, AND COMPLETE LINES 7, 8, AND 10 THROUGH 14).	(X)
NON-PROCESS FUEL BURNING SOURCE: PRODUCTS OF COMBUSTION DO NOT CONTACT MATERIALS HEATED. COMPLETE THIS FORM FOR EACH BOILER OR FUEL BURNER AND COMPLETE AN EMISSION POINT DESCRIPTION FORM (APC 22) FOR EACH STACK. (CHECK AT RIGHT, AND COMPLETE LINES 9 TO 14)	( )

7. TYPE OF OPERATION: CONTINUOUS	BATCH	NORMAL BATCH TIME	NORMAL BATCHES/DAY
(X)	( )		

8. PROCESS MATERIAL INPUTS AND IN-PROCESS SOLID FUELS	DIAGRAM* REFERENCE	INPUT RATES (POUNDS/HOUR) DESIGN	ACTUAL	(FOR APC USE ONLY) SCC CODE
A. Starch Slurry (22% DS)		33,800	30,100	
B. or Maltodextrin (55% DS)		26,200	26,200	
C.				
D.				
E.				
F.				
G.				
	TOTALS	33,800	30,100	

* A SIMPLE PROCESS FLOW DIAGRAM MUST BE ATTACHED.

9. BOILER OR BURNER DATA: (COMPLETE LINES 9 TO 14 USING A SEPARATE FORM FOR EACH BOILER)

BOILER NUMBER	STACK NUMBER**	TYPE OF FIRING***	RATED BOILER HORSEPOWER	RATED INPUT CAPACITY	OTHER BOILER RATING (SPECIFY CAPACITY AND UNITS)
	90	Gas-Fired-Auto		47.5 MM BTU/HR	

BOILER SERIAL NO.	DATE CONSTRUCTED	DATE OF LAST MODIFICATION (EXPLAIN IN COMMENTS BELOW).

** BOILERS WITH A COMMON STACK WILL HAVE THE SAME STACK NUMBER.

*** CYCLONE, SPREADER (WITH OR WITHOUT REINJECTION), PULVERIZED (WET OR DRY BOTTOM, WITH OR WITHOUT REINJECTION), OTHER STOKER (SPECIFY TYPE), HAND FIRED, AUTOMATIC, OR OTHER TYPE (DESCRIBE BELOW IN COMMENTS).

10. FUEL DATA. (COMPLETE FOR A PROCESS SOURCE WITH IN-PROCESS FUEL OR A NON-PROCESS FUEL BURNING SOURCE)

PRIMARY FUEL TYPE (SPECIFY): Natural Gas (Methane)

STANDBY FUEL TYPE(S) (SPECIFY):

FUELS USED	ANNUAL USAGE	HOURLY USAGE DESIGN	HOURLY USAGE AVERAGE	% SULFUR	% ASH	BTU VALUE OF FUEL	(FOR AFC ONLY) SCC CODE
NATURAL GAS:	~~XXXXXXX~~ 416 MM Ft^3	CUFT 47,500	CUFT 47,500	//// ////	//// ////	1,000	
#2 FUEL OIL:	10 GAL	GAL	GAL		//// ////		
#5 FUEL OIL:	10 GAL	GAL	GAL		//// ////		
#6 FUEL OIL:	10 GAL	GAL	GAL		//// ////		
COAL:	TONS	LBS	LBS				
WOOD:	TONS	LBS	LBS	//// ////	//// ////		
LIQUID PROPANE:	10 GAL	GAL	GAL	//// ////	//// ////	85,000	
OTHER (SPECIFY TYPE & UNITS:							

11. IF WOOD IS USED AS A FUEL, SPECIFY TYPES AND ESTIMATE PERCENT BY WEIGHT OF BARK.

12. IF WOOD IS USED WITH OTHER FUELS, SPECIFY PERCENT BY WEIGHT OF WOOD CHARGED TO THE BURNER.

13. COMMENTS

Dryer burner heats up air which is blown counter-current to atomized ~~starch~~ slurry, drying the material.

14. SIGNATURE: Lauren W. Zoalz

DATE: 7-28-93

NATIONAL 42-381 50 SHEETS 5 SQUARE
42-382 100 SHEETS 5 SQUARE
42-389 200 SHEETS 5 SQUARE

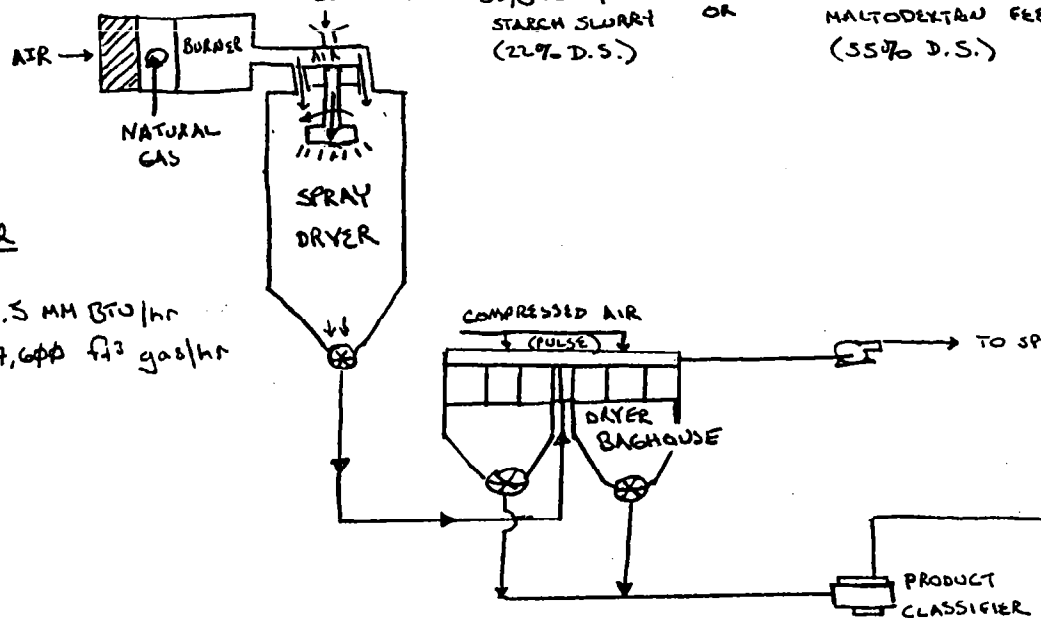

BURNER

MAX. 49.5 MM BTU/hr
47,000 ft³ gas/hr

90B - EMISSIONS (TO STACK)

MAX - 154,100 ACFM @ 205°C
TSP/PM10 0.005 gr/dscf 49 lb/hr
NO_x 6.65 lb/hr HC 0.14 lb/hr
SO_2 0.03 lb/hr
CO 1.66 lb/hr

TO SPRAY DRYER STACK (90B)

TO FILTER RECEIVER (PRODUCT)
15,000 lb/hr Maltodextrin (96% D.S.)

OR

7,500 lb/hr STARCH

NOTES

* BURNER WILL likely be run at reduced rate for reduced evaporative load.
* New Blower installed to handle dense-phase conveying (see filter receiver)
* No increase in dryer emissions (90B)

WI DENSE-PHASE CONVEYING LINE

Tasks

STATE OF TENNESSEE
DEPARTMENT OF HEALTH + ENVIRONMENT
DIVISION OF AIR POLUTION CONTROL

4th Floor Customs House
701 Broadway
Nashville, TN 37219-5403
Telephone (615) 741-3931

PROCESS OR FUEL BURNING SOURCE DESCRIPTION

PLEASE TYPE OR PRINT, SUBMIT IN DUPLICATE AND ATTACH TO THE PERMIT APPLICATION.

1. ORGANIZATION NAME: A. E. STALEY MANUFACTURING COMPANY | APC COMPANY-POINT NO. (FOR)

2. EMISSION SOURCE NO. (AS ON PERMIT APPLICATION): 90C & 90D | SIC CODE: 2046 | APC PERMIT/LOG NO. (APC)

3. DESCRIPTION OF PROCESS OR FUEL BURNING UNIT

Blend Bins (Product Bins) - Two identical sources with bag collectors e each (90C & 90D)

4. NORMAL OPERATION:	HOURS/DAY	DAYS/WEEK	WEEKS/YEAR	DAYS/YEAR
	24	7	50	350

5. PERCENT ANNUAL THROUGHPUT:	DEC.-FEB.	MARCH-MAY	JUNE-AUG.	SEPT.-NOV.
	25	25	25	25

6. TYPE OF PERMIT APPLICATION (CHECK BELOW ONE ONLY)

PROCESS SOURCE: APPLY FOR A SEPARATE PERMIT FOR EACH SOURCE. (CHECK AT RIGHT, AND COMPLETE LINES 7, 8, 13, AND 14).	(X)
PROCESS SOURCE WITH IN-PROCESS FUEL: PRODUCTS OF COMBUSTION CONTACT MATERIALS HEATED. APPLY FOR A SEPARATE PERMIT FOR EACH SOURCE. (CHECK AT RIGHT, AND COMPLETE LINES 7, 8, AND 10 THROUGH 14).	( )
NON-PROCESS FUEL BURNING SOURCE: PRODUCTS OF COMBUSTION DO NOT CONTACT MATERIALS HEATED. COMPLETE THIS FORM FOR EACH BOILER OR FUEL BURNER AND COMPLETE AN EMISSION POINT DESCRIPTION FORM (APC 22) FOR EACH STACK. (CHECK AT RIGHT, AND COMPLETE LINES 9 TO 14)	( )

7. TYPE OF OPERATION:	CONTINUOUS	BATCH	NORMAL BATCH TIME	NORMAL BATCHES/DAY
	(X)	( )		

8.

PROCESS MATERIAL INPUTS AND IN-PROCESS SOLID FUELS	DIAGRAM* REFERENCE	INPUT RATES (POUNDS/HOUR) DESIGN	ACTUAL	(FOR APC USE ONLY) SCC CODE
A. Dried Starch (5% moisture) - each		7,800	6,625	
B. or **Dried Maltodextrin (4% moisture) each**		**15000**	**15000**	
C.				
D.				
E.				
F.				
G.				
TOTALS		7,800	6,625	
		or 15000	**15000**	

* A SIMPLE PROCESS FLOW DIAGRAM MUST BE ATTACHED.

9. BOILER OR BURNER DATA: (COMPLETE LINES 9 TO 14 USING A SEPARATE FORM FOR EACH BOILER)

BOILER NUMBER	STACK NUMBER**	TYPE OF FIRING***	RATED BOILER HORSEPOWER	RATED INPUT CAPACITY (10 BTU/HR)	OTHER BOILER RATING (SPECIFY CAPACITY AND UNITS)

BOILER SERIAL NO. | DATE CONSTRUCTED | DATE OF LAST MODIFICATION (EXPLAIN IN COMMENTS BELOW).

** BOILERS WITH A COMMON STACK WILL HAVE THE SAME STACK NUMBER.

*** CYCLONE, SPREADER (WITH OR WITHOUT REINJECTION), PULVERIZED (WET OR DRY BOTTOM, WITH OR WITHOUT REINJECTION), OTHER STOKER (SPECIFY TYPE), HAND FIRED, AUTOMATIC, OR OTHER TYPE (DESCRIBE BELOW IN COMMENTS).

10. FUEL DATA. (COMPLETE FOR A PROCESS SOURCE WITH IN-PROCESS FUEL OR A NON-PROCESS FUEL BURNING SOURCE)

PRIMARY FUEL TYPE (SPECIFY)				STANDBY FUEL TYPE(S) (SPECIFY)			
FUELS USED	ANNUAL USAGE	HOURLY USAGE DESIGN	HOURLY USAGE AVERAGE	% SULFUR	% ASH	BTU VALUE OF FUEL	(FOR APC ONLY) SCC CODE
NATURAL GAS:	10 CUFT	CUFT	CUFT	//// ////	//// ////	1,000	
#2 FUEL OIL:	10 GAL	GAL	GAL		//// ////		
#5 FUEL OIL:	10 GAL	GAL	GAL		//// ////		
#6 FUEL OIL:	10 GAL	GAL	GAL		//// ////		
COAL:	TONS	LBS	LBS				
WOOD:	TONS	LBS	LBS	//// ////	//// ////		
LIQUID PROPANE:	10 GAL	GAL	GAL	//// ////	//// ////	35,000	
OTHER (SPECIFY TYPE & UNITS:							

11. IF WOOD IS USED AS A FUEL, SPECIFY TYPES AND ESTIMATE PERCENT BY WEIGHT OF BARK.

12. IF WOOD IS USED WITH OTHER FUELS, SPECIFY PERCENT BY WEIGHT OF WOOD CHARGED TO THE BURNER.

13. COMMENTS

Each bin bag collector vents 1200 acfm @ 70 deg F each with 0.01 gr/scf of PM10/TSP emissions., to the dryer stack .

14. SIGNATURE | DATE

Lauren W. Laabs | 07-28-93

NATIONAL 42-381 50 SHEETS 5 SQUARE
42-382 100 SHEETS 5 SQUARE
42-389 200 SHEETS 5 SQUARE

A.E STANLEY MANUFACTURING CO | PROCESS FLOW DIAGRAM | BLEND BINS - 9ØC & 9ØD | 7/28/92

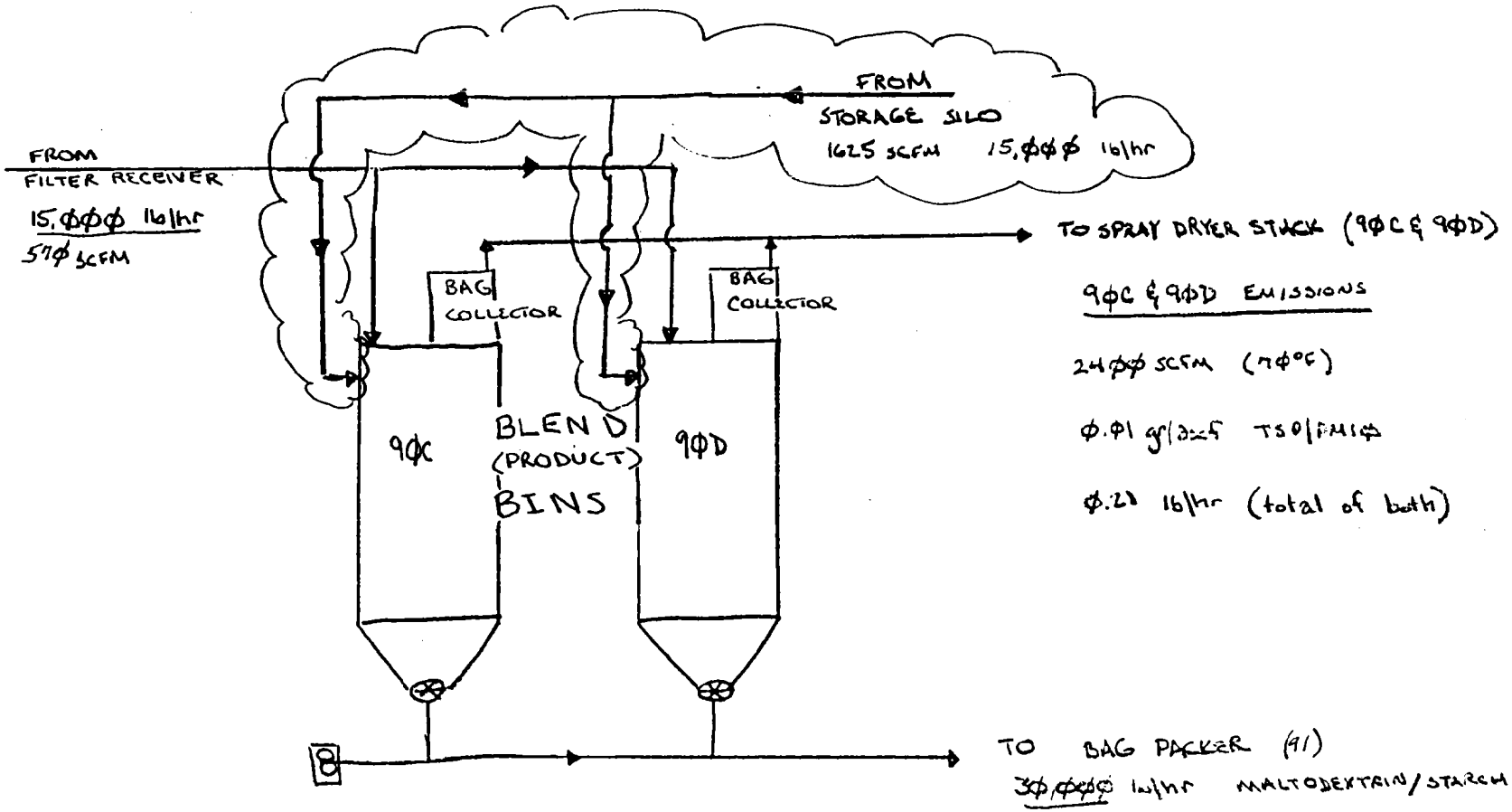

NOTE

- Both bins operate simultaneously and air flows has been revised to reflect new dense phase blower
- Bins are referred to as "blend bins" rather than "product bins"
- Product rates increased to reflect planned modifications
- No emissions change
- Revised conveying rate to bag packer

STATE OF TENNESSEE
DEPARTMENT OF HEALTH + ENVIRONMENT
DIVISION OF AIR POLUTION CONTROL

4th Floor Customs House
701 Broadway
Nashville, TN 37219-5403
Telephone (615) 741-3931

PROCESS OR FUEL BURNING SOURCE DESCRIPTION

PLEASE TYPE OR PRINT, SUBMIT IN DUPLICATE AND ATTACH TO THE PERMIT APPLICATION.

1. ORGANIZATION NAME: A. E. STALEY MANUFACTURING COMPANY | /// | APC COMPANY-POINT NO. | FOR |
2. EMISSION SOURCE NO. (AS ON PERMIT APPLICATION): 90G | SIC CODE: 2046 | /// | APC PERMIT/LOG NO. | APC |
3. DESCRIPTION OF PROCESS OR FUEL BURNING UNIT

Filter Receiver Bin with Bag Filter

4. NORMAL OPERATION:	HOURS/DAY	DAYS/WEEK	WEEKS/YEAR	DAYS/YEAR
	24	7	50	350

5. PERCENT ANNUAL THROUGHPUT:	DEC.-FEB.	MARCH-MAY	JUNE-AUG.	SEPT.-NOV.
	25	25	25	25

6. TYPE OF PERMIT APPLICATION (CHECK BELOW ONE ONLY)

PROCESS SOURCE: APPLY FOR A SEPARATE PERMIT FOR EACH SOURCE. (CHECK AT RIGHT. AND COMPLETE LINES 7, 8, 13, AND 14).	/ (X)
PROCESS SOURCE WITH IN-PROCESS FUEL: PRODUCTS OF COMBUSTION CONTACT MATERIALS HEATED. APPLY FOR A SEPARATE PERMIT FOR EACH SOURCE. (CHECK AT RIGHT, AND COMPLETE LINES 7, 8, AND 10 THROUGH 14).	( )
NON-PROCESS FUEL BURNING SOURCE: PRODUCTS OF COMBUSTION DO NOT CONTACT MATERIALS HEATED. COMPLETE THIS FORM FOR EACH BOILER OR FUEL BURNER AND COMPLETE AN EMISSION POINT DESCRIPTION FORM (APC 22) FOR EACH STACK. (CHECK AT RIGHT. AND COMPLETE LINES 9 TO 14)	( )

7. TYPE OF OPERATION: CONTINUOUS	BATCH	NORMAL BATCH TIME	NORMAL BATCHES/DAY
(X)	( )		

8. PROCESS MATERIAL INPUTS AND IN-PROCESS SOLID FUELS	DIAGRAM* REFERENCE	INPUT RATES (POUNDS/HOUR) DESIGN	ACTUAL	(FOR APC USE ONLY) SCC CODE
A. Dried Starch (5% moisture)		7,800	6,625	
OR B. Maltodextrin (4% moisture)		15,000	15,000	
C.				
D.				
E.				
F.				
G.				
	TOTALS	7,800 or 15000	6,625 15000	

* A SIMPLE PROCESS FLOW DIAGRAM MUST SE ATTACHED.

see storage silo PFD for revisions

9. BOILER OR BURNER DATA: (COMPLETE LINES 9 TO 14 USING A SEPARATE FORM FOR EACH BOILER)

BOILER NUMBER	STACK NUMBER**	TYPE OF FIRING***	RATED BOILER HORSEPOWER	RATED INPUT CAPACITY (10 BTU/HR)	OTHER BOILER RATING (SPECIFY CAPACITY AND UNITS)

BOILER SERIAL NO. | DATE CONSTRUCTED | DATE OF LAST MODIFICATION (EXPLAIN IN COMMENTS BELOW).

** BOILERS WITH A COMMON STACK WILL HAVE THE SAME STACK NUMBER.

*** CYCLONE, SPREADER (WITH OR WITHOUT REINJECTION), PULVERIZED (WET OR DRY BOTTOM, WITH OR WITHOUT REINJECTION), OTHER STOKER (SPECIFY TYPE), HAND FIRED, AUTOMATIC, OR OTHER TYPE (DESCRIBE BELOW IN COMMENTS).

10. FUEL DATA. (COMPLETE FOR A PROCESS SOURCE WITH IN-PROCESS FUEL OR A NON-PROCESS FUEL BURNING SOURCE)

PRIMARY FUEL TYPE (SPECIFY)				STANDBY FUEL TYPE(S) (SPECIFY)			
FUELS USED	ANNUAL USAGE	HOURLY USAGE DESIGN	HOURLY USAGE AVERAGE	% SULFUR	% ASH	BTU VALUE OF FUEL	(FOR APC ONLY) SCC CODE
NATURAL GAS:	10 CUFT	CUFT	CUFT	//// ////	//// ////	1,000	
#2 FUEL OIL:	10 GAL	GAL	GAL		//// ////		
#5 FUEL OIL:	10 GAL	GAL	GAL		//// ////		
#6 FUEL OIL:	10 GAL	GAL	GAL		//// ////		
COAL:	TONS	LBS	LBS				
WOOD:	TONS	LBS	LBS	//// ////	//// ////		
LIQUID PROPANE:	10 GAL	GAL	GAL	//// ////	//// ////	85,000	
OTHER (SPECIFY TYPE & UNITS:							

11. IF WOOD IS USED AS A FUEL, SPECIFY TYPES AND ESTIMATE PERCENT BY WEIGHT OF BARK.

12. IF WOOD IS USED WITH OTHER FUELS, SPECIFY PERCENT BY WEIGHT OF WOOD CHARGED TO THE BURNER.

13. COMMENTS

1525 ~~XXX~~ ACFM @ 70°F @ 0.01 gr/scf is vented to the spray dryer stack from the bag filter. **Filter Receiver may either convey to Blend Bins or to the Storage Silo.**

14. SIGNATURE Lauren W. Laabs | DATE 7-28-93

STATE OF TENNESSEE
DEPARTMENT OF HEALTH + ENVIRONMENT
DIVISION OF AIR POLUTION CONTROL

4th Floor Customs House
701 Broadway
Nashville, TN 37219-5403
Telephone (615) 741-3931

PROCESS OR FUEL BURNING SOURCE DESCRIPTION

PLEASE TYPE OR PRINT, SUBMIT IN DUPLICATE AND ATTACH TO THE PERMIT APPLICATION.

1. ORGANIZATION NAME: A. E. STALEY MANUFACTURING COMPANY | FOR APC COMPANY-POINT NO.
2. EMISSION SOURCE NO. (AS ON PERMIT APPLICATION): 90H | SIC CODE: 2046 | FOR APC PERMIT/LOG NO.
3. DESCRIPTION OF PROCESS OR FUEL BURNING UNIT

Unloading Receiver Bin with Bag Filter

4. NORMAL OPERATION:	HOURS/DAY	DAYS/WEEK	WEEKS/YEAR	DAYS/YEAR
	24	7	50	350

5. PERCENT ANNUAL THROUGHPUT:	DEC.-FEB.	MARCH-MAY	JUNE-AUG.	SEPT.-NOV.
	25	25	25	25

6. TYPE OF PERMIT APPLICATION (CHECK BELOW ONE ONLY)

PROCESS SOURCE: APPLY FOR A SEPARATE PERMIT FOR EACH SOURCE. (CHECK AT RIGHT, AND COMPLETE LINES 7, 8, 13, AND 14).	(X)
PROCESS SOURCE WITH IN-PROCESS FUEL: PRODUCTS OF COMBUSTION CONTACT MATERIALS HEATED. APPLY FOR A SEPARATE PERMIT FOR EACH SOURCE. (CHECK AT RIGHT, AND COMPLETE LINES 7, 8, AND 10 THROUGH 14).	( )
NON-PROCESS FUEL BURNING SOURCE: PRODUCTS OF COMBUSTION DO NOT CONTACT MATERIALS HEATED. COMPLETE THIS FORM FOR EACH BOILER OR FUEL BURNER AND COMPLETE AN EMISSION POINT DESCRIPTION FORM (APC 22) FOR EACH STACK. (CHECK AT RIGHT, AND COMPLETE LINES 9 TO 14)	( )

7. TYPE OF OPERATION: CONTINUOUS	BATCH	NORMAL BATCH TIME	NORMAL BATCHES/DAY
(X)	( )		

8. PROCESS MATERIAL INPUTS AND IN-PROCESS SOLID FUELS	DIAGRAM* REFERENCE	INPUT RATES (POUNDS/HOUR) DESIGN	ACTUAL	(FOR APC USE ONLY) SCC CODE
A. Corn Starch		30,000	28,800	
B.				
C.				
D.				
E.				
F.				
G.				
	TOTALS	30,000	28,800	

* A SIMPLE PROCESS FLOW DIAGRAM MUST BE ATTACHED.

9. BOILER OR BURNER DATA: (COMPLETE LINES 9 TO 14 USING A SEPARATE FORM FOR EACH BOILER)

BOILER NUMBER	STACK NUMBER**	TYPE OF FIRING***	RATED BOILER HORSEPOWER	RATED INPUT CAPACITY (10 BTU/HR)	OTHER BOILER RATING (SPECIFY CAPACITY AND UNITS)

BOILER SERIAL NO.	DATE CONSTRUCTED	DATE OF LAST MODIFICATION (EXPLAIN IN COMMENTS BELOW).

** BOILERS WITH A COMMON STACK WILL HAVE THE SAME STACK NUMBER.

*** CYCLONE, SPREADER (WITH OR WITHOUT REINJECTION), PULVERIZED (WET OR DRY BOTTOM, WITH OR WITHOUT REINJECTION), OTHER STOKER (SPECIFY TYPE), HAND FIRED, AUTOMATIC, OR OTHER TYPE (DESCRIBE BELOW IN COMMENTS).

10. FUEL DATA. (COMPLETE FOR A PROCESS SOURCE WITH IN-PROCESS FUEL OR A NON-PROCESS FUEL BURNING SOURCE)

PRIMARY FUEL TYPE (SPECIFY)				STANDBY FUEL TYPE(S) (SPECIFY)			
FUELS USED	ANNUAL USAGE	HOURLY USAGE DESIGN	HOURLY USAGE AVERAGE	% SULFUR	% ASH	BTU VALUE OF FUEL	(FOR APC ONLY) SCC CODE
NATURAL GAS:	10 CUFT	CUFT	CUFT	//// ////	//// ////	1,000	
#2 FUEL OIL:	10 GAL	GAL	GAL		//// ////		
#5 FUEL OIL:	10 GAL	GAL	GAL		//// ////		
#6 FUEL OIL:	10 GAL	GAL	GAL		//// ////		
COAL:	TONS	LBS	LBS				
WOOD:	TONS	LBS	LBS	//// ////	//// ////		
LIQUID PROPANE:	10 GAL	GAL	GAL	//// ////	//// ////	85,000	
OTHER (SPECIFY TYPE & UNITS:							

11. IF WOOD IS USED AS A FUEL, SPECIFY TYPES AND ESTIMATE PERCENT BY WEIGHT OF BARK.

12. IF WOOD IS USED WITH OTHER FUELS, SPECIFY PERCENT BY WEIGHT OF WOOD CHARGED TO THE BURNER.

13. COMMENTS

850 ACFM @ 70°F @ 0.01 gr/scf are vented to the spray dryer stack.

No changes - not part of Maltodextrin process.

14. SIGNATURE Lauren W Laah | DATE 7-28-93

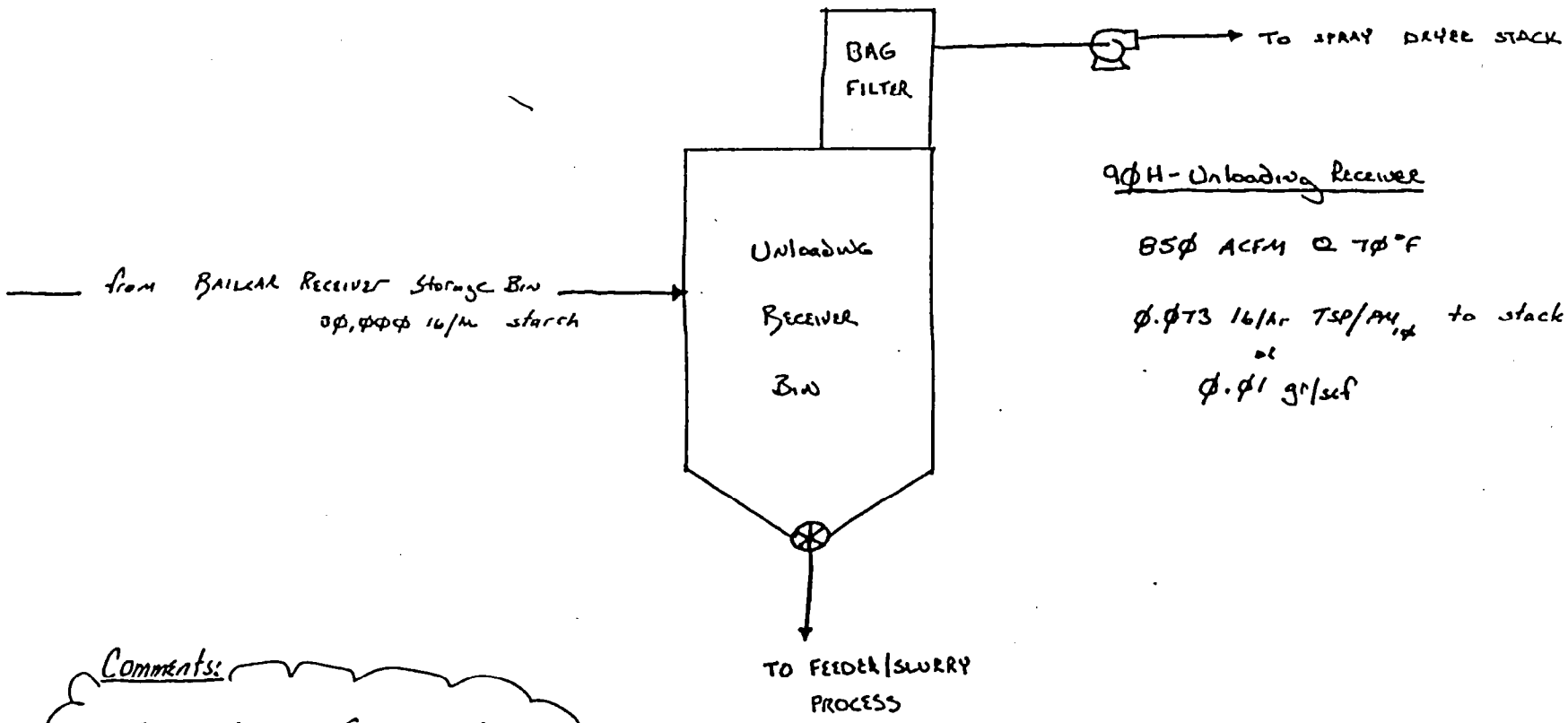

90H - Unloading Receiver

850 ACFM @ 70°F

0.073 lb/hr TSP/PM_{10} to stack
or
0.01 gr/scf

Comments:

- The addition of the unloading receiver bin has allowed for more controlled slurry mixing process than originally conceived and adds some raw material storage capacity

*No change due to malto expansion
- 7/29/93 JAH

PROCESS FLOW DIAGRAM (90H)

TENNESSEE AIR POLLUTION CONTROL BOARD
DEPARTMENT OF ENVIRONMENT AND CONSERVATION
NASHVILLE, TENNESSEE 37243-1531

CO-File

Permit to Construct or Modify an Air Contaminant Source Issued Pursuant to Tennessee Air Quality Act

Date Issued: NOV 09 1993

Permit Number: 937518P

Date Expires: March 1, 1994

Issued To:
A. E. Staley Manufacturing Company

Installation Address:
Blair Bend Industrial Park
Loudon

Installation Description:
PES 91
Bag Packer Facility
with Baghouse Filter

Emission Source Reference No.
53-0081-91
PSD, BACT

The holder of this permit shall comply with the conditions contained in this permit as well as all applicable provisions of the Tennessee Air Pollution Control Regulations.
This is not a permit to operate.

CONDITIONS:

1. This permit does not cover any air contaminant source that does not conform to the conditions of this permit and the information given in the approved application. This includes compliance with the following operating parameters:

   The maximum process weight rate (PWR) shall not exceed 30,000 pounds/hr.

2. Particulate matter(PM_{10}) emitted from this source shall not exceed 0.01 grains/dscf (0.09 pounds/hr).

3. Visible emissions shall not exceed 20 percent or greater opacity as determined by EPA Method 9, as published in the federal ragister, Volume 39, no. 219 on November 12, 1974. (6 minute average)

4. If visible emissions exceed the limits specified in condition 3, a stack test may be required.

(continued on page 2)

John W. Walton
GRW 11/8/93
TECHNICAL SECRETARY

No Authority is Granted by this Permit to Operate, Construct, or Maintain any Installation in Violation of any Law, Statute, Code, Ordinance, Rule, or Regulation of the State of Tennessee or any of its Political Subdivisions.

NON TRANSFERABLE

POST AT INSTALLATION ADDRESS

6. This permit shall serve as a temporary operating permit from initial start-up to the receipt of a standard operating permit, (regardless of the expiration date), provided the operating permit is applied for within thirty (30) days of initial start-up and the conditions of this permit and any applicable emission standards are met.

9. The issuance of this construction permit supersedes any previously issued construction permit for this air contaminant source.

10. The application that was utilized in the preparation of this permit is dated July 29, 1993 and signed by James Hoyt, Corporate Environmental Engineer of the permitted facility. If this person terminates his/her employment or is reassigned different duties such that he/she is no longer the responsible person to represent and bind the facility in environmental permitting affairs, the new person assuming these duties shall declare himself/herself in writing by name and title to the Technical Secretary within fifteen days of the above named person's separation or reassignment of duties within the facility. Said declaration shall contain a statement of concurrence by the new person that all applications and mutual letters of agreement that were signed by the person named above still represent and accurately describe the manner in which the facility is operated or to be operated. If such declaration cannot be made because of non-compliance with a specific value in the approved application and/or any agreement letters used in the preparation of this permit, the new person shall immediately notify the Technical Secretary in writing. The notification must detail the discovered non-compliance and provide a proposed schedule of corrective action to rectify the non-compliance.

STATE OF TENNESSEE
DEPARTMENT OF HEALTH + ENVIRONMENT
DIVISION OF AIR POLUTION CONTROL

4th Floor Customs House
701 Broadway
Nashville, TN 37219-5403
Telephone (615) 741-3931

JUL 2 9 1993

PERMIT APPLICATION

PLEASE TYPE OR PRINT AND SUBMIT IN DUPLICATE FOR EACH EMISSION SOURCE, ATTACH APPROPRIATE SOURCE DESCRIPTION FORMS.

1. ORGANIZATION'S LEGAL NAME: A. E. Staley Manufacturing Company
   APC COMPANY-POINT NO. FOR: 53-0081-91
2. MAILING ADDRESS (ST/RD/P.O.BOX): 2200 East Eldorado Street
   APC LOG/PERMIT NO.: 37518
   CITY: Decatur | STATE: IL | ZIP CODE: 62521 | PHONE WITH AREA CODE: 217-423-4411
3. PRINCIPAL TECHNICAL CONTACT: James A. Hoyt, Corporate Environmental Engineer | PHONE WITH AREA CODE: 217-421-2503
4. SITE ADDRESS (ST/RD/HWY): 198 Blair Bend Drive | COUNTY NAME: Loudon
   CITY OR DISTANCE TO NEAREST TOWN: Loudon | ZIP CODE: 37774 | PHONE WITH AREA CODE: 615-458-5681
5. EMISSION SOURCE NO. (NUMBER WHICH UNIQUELY IDENTIFIES THIS SOURCE): 91 | PERMIT RENEWAL: YES ( ), NO (X)
6. BRIEF DESCRIPTION OF EMISSION SOURCE

   Bag Packer Collector - starch and maltodextrin will be bagged and palletized in the packaging building.

7. TYPE OF PERMIT REQUESTED (COMPLETE ONE LINE ONLY)

CONSTRUCTION & modification to existing pmt.	STARTING DATE: asap (mid November)	COMPLETION DATE:	DATE WAIVER APPROVED (IF APPLICABLE):	
OPERATING (X)	DATE CONSTRUCTION STARTED:	DATE COMPLETED:	LAST PERMIT NO.: 035504P	EMISSION SOURCE REFERENCE NUMBER: 53-0081-91
LOCATION TRANSFER ( )	TRANSFER DATE:		LAST PERMIT NO.:	EMISSION SOURCE REFERENCE NUMBER:

ADDRESS OF LAST LOCATION

8. DESCRIBE CHANGES THAT HAVE BEEN MADE TO THIS EQUIPMENT OR OPERATION SINCE THE LAST CONSTRUCTION OR OPERATING PERMIT APPLICATION.

   Bag Packing facility will be revised to include maltodextrin packout capabilities as well as starch. No emission change is anticipated, although conveying will be dense phase and throughput will be 30,000 lb/hr.

9. SIGNATURE (APPLICATION MUST BE SIGNED BEFORE IT WILL BE PROCESSED): Lauren W. Laabs | DATE: 7-28-93
10. SIGNER'S NAME (TYPE OR PRINT): Lauren W. Laabs | TITLE: Manager, Env. Sciences | PHONE WITH AREA CODE: 217-421-3218

APC 20

PH-0425
APC 1/80

STATE OF TENNESSEE
DEPARTMENT OF HEALTH + ENVIRONMENT
DIVISION OF AIR POLLUTION CONTROL

TERRA BLDG., 150 9TH AVE. N.
NASHVILLE, TN, 37219-5404
TELEPHONE (615) 741-3931

EMISSION POINT DESCRIPTION

PLEASE TYPE OR PRINT AND SUBMIT IN DUPLICATE FOR EACH STACK OR EMISSION POINT. ATTACH TO THE PERMIT APPLICATION.

1. ORGANIZATION NAME: A. E. Staley Manufacturing Company | APC COMPANY-POINT NO. FOR:

2. EMISSION SOURCE NO. (FROM APPLICATION): 91 | FLOW DIAGRAM POINT NUMBER: 91 | APC SEQUENCE NO. APC:

3. LOCATION: New RC/K3 Warehouse | LATITUDE: 35°44'04" | LONGITUDE: 84°19'20" | UTM VERTICAL: 3957.6KM | UTM HORIZONTAL: 742.1KM

4. BRIEF EMISSION POINT DESCRIPTION (ATTACH A SKETCH IF APPROPRIATE): Bag Packer Collector | DISTANCE TO NEAREST PROPERTY LINE (FT)

COMPLETE LINES 5 AND 6 IF DIFFERENT FROM THAT ON THE PROCESS OR FUEL BURNING SOURCE DESCRIPTION (APC 21)

5. NORMAL OPERATION: HOURS/DAY: 24 | DAYS/WEEK: 7 | WEEKS/YEAR: 52 | DAYS/YEAR:

6. PERCENT ANNUAL THROUGHPUT: DEC.-FEB.: 25 | MARCH-MAY: 25 | JUNE-AUG.: 25 | SEPT.-NOV.: 25

7. STACK OR EMISSION POINT DATA: HEIGHT ABOVE GRADE (FT): 60 | DIAMETER (FT): 0.67 | TEMPERATURE (°F): Ambient | % OF TIME OVER 125°F: 0 | DIRECTION OF EXIT (UP, DOWN, OR HORIZONTAL): Up

DATA AT EXIT CONDITIONS: FLOW (ACTUAL FT3/MIN.): 1000 | VELOCITY (FT/SEC): 47.7 | MOISTURE (GRAINS/FT3): Ambient | MOISTURE (PERCENT): Ambient

DATA AT STANDARD CONDITIONS: (70°F, 1ATM) FLOW (DRY STD. FT3/MIN.): 1000 | VELOCITY (FT/SEC): 47.7 | MOISTURE (GRAINS/FT3): Ambient | MOISTURE (PERCENT): Ambient

8. AIR CONTAMINANTS

	ACTUAL EMISSIONS						
	EMISSIONS (LBS/HR) AVERAGE	EMISSIONS (LBS/HR) MAXIMUM	CONCENTRATION	AVG. EMISS (TONS/YR)	EMISSIONS* EST. METHOD	CONTROL DEVICES*	CONTROL EFFICIENCY %
PARTICULATES		0.09	** 0.01		6	018	>99.99
SULFUR DIOXIDE			***				
NITROGEN OXIDES			PPM				
ORGANIC COMPOUNDS			PPM				
CARBON MONOXIDE			PPM				
FLUORIDES							
OTHER (SPECIFY)							

9. CHECK TYPES OF MONITORING AND RECORDING INSTRUMENTS THAT ARE ATTACHED:
OPACITY MONITOR ( ), SO2 MONITOR ( ), NOX MONITOR ( ), OTHER (SPECIFY IN COMMENTS) ( )

10. COMMENTS: (CONTINUE ON BACK IF NEEDED)

Emissions determined by engineering estimate.

11. SIGNATURE: Lauren W Laabs | DATE: 7-28-93

* REFER TO THE BACK OF THE PERMIT APPLICATION FORM FOR ESTIMATION METHOD AND CONTROL DEVICE CODES.

** EXIT GAS PARTICULATE CONCENTRATION UNITS: PROCESS - GRAINS/DRY STANDARD FT3 (70°F); WOOD FIRED BOILERS - GRAINS/DRY STANDARD FT3 (70°F); ALL OTHER BOILERS - LBS/MILLION BTU HEAT INPUT.

*** EXIT GAS SULFUR DIOXIDE CONCENTRATIONS UNITS: PROCESS - PPM BY VOLUME, DRY BASES; BOILERS - LBS/MILLION BTU HEAT INPUT.

STATE OF TENNESSEE
DEPARTMENT OF HEALTH - ENVIRONMENT
DIVISION OF AIR POLLUTION CONTROL

PROCESS OR FUEL BURNING SOURCE DESCRIPTION

4th Floor Customs House
701 Broadway
Nashville, TN 37219-5403
Telephone (615) 741-3931

PLEASE TYPE OR PRINT, SUBMIT IN DUPLICATE AND ATTACH TO THE PERMIT APPLICATION.

1. ORGANIZATION NAME: A. E. Staley Manufacturing Company | APC COMPANY-POINT NO. | FOR |

2. EMISSION SOURCE NO. (AS ON PERMIT APPLICATION): 91 | SIC CODE: 2046 | APC PERMIT/LOG NO. | APC |

3. DESCRIPTION OF PROCESS OR FUEL BURNING UNIT

Bag packer collector

4. NORMAL OPERATION:	HOURS/DAY	DAYS/WEEK	WEEKS/YEAR	DAYS/YEAR
	24	7	50	350

5. PERCENT ANNUAL THROUGHPUT:	DEC.-FEB.	MARCH-MAY	JUNE-AUG.	SEPT.-NOV.
	25	25	25	25

6. TYPE OF PERMIT APPLICATION (CHECK BELOW ONE ONLY)

PROCESS SOURCE: APPLY FOR A SEPARATE PERMIT FOR EACH SOURCE. (CHECK AT RIGHT, AND COMPLETE LINES 7, 8, 13, AND 14)	X
PROCESS SOURCE WITH IN-PROCESS FUEL: PRODUCTS OF COMBUSTION CONTACT MATERIALS HEATED. APPLY FOR A SEPARATE PERMIT FOR EACH SOURCE. (CHECK AT RIGHT, AND COMPLETE LINES 7, 8, AND 10 THROUGH 14)	( )
NON-PROCESS FUEL BURNING SOURCE: PRODUCTS OF COMBUSTION DO NOT CONTACT MATERIALS HEATED. COMPLETE THIS FORM FOR EACH BOILER OR FUEL BURNER AND COMPLETE AN EMISSION POINT DESCRIPTION FORM (APC 02) FOR EACH STACK. (CHECK AT RIGHT, AND COMPLETE LINES 9 TO 14)	( )

7. TYPE OF OPERATION: CONTINUOUS X | BATCH ( ) | NORMAL BATCH TIME | NORMAL BATCHES/DAY

8. PROCESS MATERIAL INPUTS AND IN-PROCESS SOLID FUELS

	DIAGRAM* REFERENCE	INPUT RATES (POUNDS/HOUR) DESIGN	ACTUAL	(FOR APC USE ONLY) SCC CODE
A. Starch (5% moisture)	30,000			
B. Maltodextrin (4% moisture)	30,000			
C.				
D.				
E.				
F.				
G.				
TOTALS		30000		

* A SIMPLE PROCESS FLOW DIAGRAM MUST BE ATTACHED.

		HORSEPOWER	CAPACITY (10 BTU/HR)	(SPECIFY CAPACITY AND

BOILER SERIAL NO.	DATE CONSTRUCTED	DATE OF LAST MODIFICATION (EXPLAIN IN COMMENTS BE

** BOILERS WITH A COMMON STACK WILL HAVE THE SAME STACK NUMBER.

*** CYCLONE, SPREADER (WITH OR WITHOUT REINJECTION), PULVERIZED (WET OR DRY BOTTOM, WITH OR WITH REINJECTION), OTHER STOKER (SPECIFY TYPE), HAND FIRED, AUTOMATIC, OR OTHER TYPE (DESCRIBE BE IN COMMENTS).

10. FUEL DATA. (COMPLETE FOR A PROCESS SOURCE WITH IN-PROCESS FUEL OR A NON-PROCESS FUEL BURNING SO

PRIMARY FUEL TYPE (SPECIFY)				STANDBY FUEL TYPE(S) (SPECIFY)			
FUELS USED	ANNUAL USAGE	HOURLY USAGE DESIGN	HOURLY USAGE AVERAGE	% SULFUR	% ASH	BTU VALUE OF FUEL	(FOR APC ONLY) SCC CODE
NATURAL GAS:	10 CUFT	CUFT	CUFT	//// ////	//// ////	1,000	
#2 FUEL OIL:	10 GAL	GAL	GAL		//// ////		
#5 FUEL OIL:	10 GAL	GAL	GAL		//// ////		
#6 FUEL OIL:	10 GAL	GAL	GAL		//// ////		
COAL:	TONS	LBS	LBS				
WOOD:	TONS	LBS	LBS	//// ////	//// ////		
LIQUID PROPANE:	10 GAL	GAL	GAL	//// ////	//// ////	35,000	
OTHER (SPECIFY TYPE & UNITS):							

11. IF WOOD IS USED AS A FUEL, SPECIFY TYPES AND ESTIMATE PERCENT BY WEIGHT OF BARK.

12. IF WOOD IS USED WITH OTHER FUELS, SPECIFY PERCENT BY WEIGHT OF WOOD CHARGED TO THE BURNER.

13. COMMENTS

Emissions from two packouts are aspirated to the packout bag filter, which vents to the atmosphere.

14. SIGNATURE

Lauren W. Laabs

DATE

7-28-93

NATIONAL 42-381 50 SHEETS 5 SQUARE
42-382 100 SHEETS 5 SQUARE
42-389 200 SHEETS 5 SQUARE

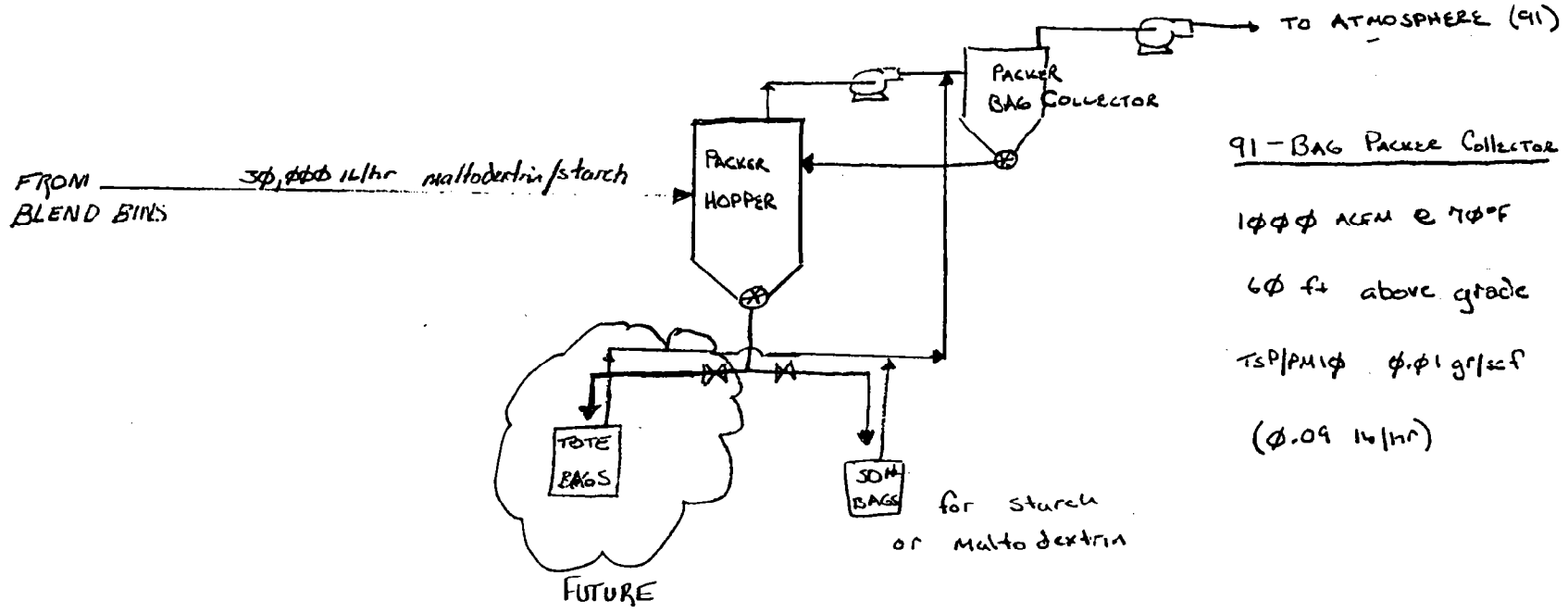

NOTE

* SYSTEM WILL EITHER PACK 50# bags OR TOTES - not simultaneous
* NO EMISSIONS CHANGE

JTH AE STALEY MANUFACTURING PROCESS FLOW DIAGRAM BAG PACKER COLLECTOR - 91 7/28

Co. File

TENNESSEE AIR POLLUTION CONTROL BOARD
DEPARTMENT OF HEALTH AND ENVIRONMENT
NASHVILLE, TENNESSEE 37247-3101

Permit to Construct or Modify an Air Contaminant Source Issued Pursuant to Tennessee Air Quality Act

Date Issued: AUG 30 1990

Permit Number: 998037P

Date Expires: November 1, 1990

Issued To:

A. E. Staley Manufacturing Co.

Installation Address:

Blair Bend Industrial Park
Loudon

Installation Description:

PES 81A, 81B, 81C, 81D
Dry Starch Loadout System - Four Stations
Baghouse Filter Control

Emission Source Reference No:

53-0081-81

The holder of this permit shall comply with the conditions contained in this permit as well as all applicable provisions of the Tennessee Air Pollution Control Regulations.
This is not a permit to operate.

CONDITIONS:

1. This permit does not cover any air contaminant source that does not conform to the conditions of this permit and the information given in the approved application. This includes compliance with the following operating parameters:

   The material input for this source shall not exceed 17,000 lbs. per hour of dry starch.

2. Particulate matter emitted from this source shall not exceed 1.0 lbs. per hour.

3. Visible emissions shall not exceed 10 percent or greater opacity as determined by EPA Method 9, as published in the Federal Register, Volume 39, No. 219 on November 12, 1974. (6 minute average)

4. This permit shall serve as a temporary operating permit from initial start-up to the receipt of a standard operating permit, (regardless of the expiration date), provided the operating permit is applied for within thirty (30) days of initial start-up and the conditions of this permit and any applicable emission standards are met.

JMK

Harold E. Hodges

HAROLD E. HODGES, P.E.
TECHNICAL SECRETARY

F1190177

No Authority is Granted by this Permit to Operate, Construct, or Maintain any Installation in Violation of any Law, Statute, Code, Ordinance, Rule or Regulation of the State of Tennessee or any of its Political Subdivisions.

NON TRANSFERABLE

POST AT INSTALLATION ADDRESS

PH-0515

Emission Summary Permit No. 775037P

Source Status: New X Modification — Expansion — Relocation — Permit Status: New X Renewal —

— NSPS — Previous Permit No.: Construction — Operating —

	Pounds/hour			Tons/year			Gr/Scfm, ppm or #/mm Btu		Date Data	*	Applicable Standard
	Actual	Pot.	Allow.	Actual	Pot.	Allow.	Actual	Allow.			
TSP	0.23	0.23	1.0	1.0	1.0	4.4		n/a	6-[illegible]	2	[illegible].01(5)
SO_2											
CO											
VOC											
NO_x											
										1	

* Source of data

MEETS 100 % OPACITY YES ____ NO ____ AVERAGE % OPACITY ____ FUGITIVE DUST SATISFACTORY YES ____ NO ____

RECOMMENDED: ISSUE PERMIT ____ DENY PERMIT ____ CANCEL ____ BASIS: VISIBLE EMISSIONS ____ EQUIPMENT INSPECTION ____

ENFORCEMENT PROGRAM ____ DATE ____ ____ DATE ____

ENGINEERING PROGRAM [illegible] DATE [illegible] ____ DATE ____

STATE OF TENNESSEE
DEPARTMENT OF HEALTH + ENVIRONMENT
DIVISION OF AIR POLUTION CONTROL

RECEIVED
DATE MAY 1 6 1990
CO. NO.
LD A1 2 3 4 5 6
B 1 2 3 4 5
CS
OTHER

4th Floor Customs House
701 Broadway
Nashville, TN 37219-5403
Telephone (615) 741-3931

Co file

PERMIT APPLICATION

PLEASE TYPE OR PRINT AND SUBMIT IN DUPLICATE FOR EACH EMISSION SOURCE, ATTACH APPROPRIATE SOURCE DESCRIPTION FORMS.

1. ORGANIZATION'S LEGAL NAME
A. E. Staley Manufacturing Company

APC COMPANY-POINT NO. FOR 53-0081-81 +1

2. MAILING ADDRESS (ST/RD/P.O.BOX)
2200 East Eldorado Street

APC LOG/PERMIT NO. APC C 8037

CITY	STATE	ZIP CODE	PHONE WITH AREA CODE
Decatur	IL	62525	217/423-4411

3. PRINCIPAL TECHNICAL CONTACT
James A. Hoyt

PHONE WITH AREA CODE 217/421-2503

4. SITE ADDRESS (ST/RD/HWY)
Blair Bend Industrial Park - P.O. Box 248

COUNTY NAME Loudon

CITY OR DISTANCE TO NEAREST TOWN	ZIP CODE	PHONE WITH AREA CODE
Loudon	37774	615/458-5681

5. EMISSION SOURCE NO. (NUMBER WHICH UNIQUELY IDENTIFIES THIS SOURCE)
81 (A,B,C,D)

PERMIT RENEWAL
YES ( ), NO (x). /

6. BRIEF DESCRIPTION OF EMISSION SOURCE

Dry starch loadout system - 4 alternate loadouts (not simultaneous operations)

7. TYPE OF PERMIT REQUESTED (COMPLETE ONE LINE ONLY)

CONSTRUCTION	STARTING DATE	COMPLETION DATE	DATE WAIVER APPROVED (IF APPLICABLE)
(x)	Upon receipt of approvals.		

OPERATING	DATE CONSTRUCTION STARTED	DATE COMPLETED	LAST PERMIT NO.	EMISSION SOURCE REFERENCE NUMBER
( )				

LOCATION TRANSFER	TRANSFER DATE	LAST PERMIT NO.	EMISSION SOURCE REFERENCE NUMBER
( )			

ADDRESS OF LAST LOCATION

8. DESCRIBE CHANGES THAT HAVE BEEN MADE TO THIS EQUIPMENT OR OPERATION SINCE THE LAST CONSTRUCTION OR OPERATING PERMIT APPLICATION.

9. SIGNATURE (APPLICATION MUST BE SIGNED BEFORE IT WILL BE PROCESSED)
Lauren W. Laabs

DATE 5-16-90

10. SIGNER'S NAME (TYPE OR PRINT)	TITLE	PHONE WITH AREA CODE
Lauren W. Laabs	Manager, Environmental Affairs	217/423-4411

STATE OF TENNESSEE
DEPARTMENT OF HEALTH + ENVIRONMENT
DIVISION OF AIR POLUTION CONTROL

4th Floor Customs House
701 Broadway
Nashville, TN 37219-5403
Telephone (615) 741-3931

PROCESS OR FUEL BURNING SOURCE DESCRIPTION

PLEASE TYPE OR PRINT, SUBMIT IN DUPLICATE AND ATTACH TO THE PERMIT APPLICATION.

1. ORGANIZATION NAME: A. E. Staley Manufacturing Company | FOR | APC COMPANY-POINT NO.

2. EMISSION SOURCE NO. (AS ON PERMIT APPLICATION): 81 (A,B,C,D,) | SIC CODE: 2046 | APC | APC PERMIT/LOG NO.

3. DESCRIPTION OF PROCESS OR FUEL BURNING UNIT

Starch Hose Loadout Station

4. NORMAL OPERATION:	HOURS/DAY	DAYS/WEEK	WEEKS/YEAR	DAYS/YEAR
	24	7	50	350

5. PERCENT ANNUAL THROUGHPUT:	DEC.-FEB.	MARCH-MAY	JUNE-AUG.	SEPT.-NOV.
	25	25	25	25

6. TYPE OF PERMIT APPLICATION (CHECK BELOW ONE ONLY)

PROCESS SOURCE: APPLY FOR A SEPARATE PERMIT FOR EACH SOURCE. (CHECK AT RIGHT, AND COMPLETE LINES 7, 8, 13, AND 14).	(X)
PROCESS SOURCE WITH IN-PROCESS FUEL: PRODUCTS OF COMBUSTION CONTACT MATERIALS HEATED. APPLY FOR A SEPARATE PERMIT FOR EACH SOURCE. (CHECK AT RIGHT, AND COMPLETE LINES 7, 8, AND 10 THROUGH 14).	( )
NON-PROCESS FUEL BURNING SOURCE: PRODUCTS OF COMBUSTION DO NOT CONTACT MATERIALS HEATED. COMPLETE THIS FORM FOR EACH BOILER OR FUEL BURNER AND COMPLETE AN EMISSION POINT DESCRIPTION FORM (APC 22) FOR EACH STACK. (CHECK AT RIGHT, AND COMPLETE LINES 9 TO 14)	( )

7. TYPE OF OPERATION: CONTINUOUS (X), BATCH ( ) | NORMAL BATCH TIME | NORMAL BATCHES/DAY

8. PROCESS MATERIAL INPUTS AND IN-PROCESS SOLID FUELS

	DIAGRAM* REFERENCE	INPUT RATES (POUNDS/HOUR) DESIGN	ACTUAL	(FOR APC USE ONLY) SCC CODE
A. Dry Starch (14% moisture)	81(A,B,C,D)	17,000	16,000	
B.				
C.				
D.				
E.				
F.				
G.				
	TOTALS	17,000	16,000	

* A SIMPLE PROCESS FLOW DIAGRAM MUST BE ATTACHED.

9. BOILER OR BURNER DATA: (COMPLETE LINES 9 TO 14 USING A SEPARATE FORM FOR EACH BOILER)

BOILER NUMBER	STACK NUMBER**	TYPE OF FIRING***	RATED BOILER HORSEPOWER	RATED INPUT CAPACITY (10 BTU/HR)	OTHER BOILER RATING (SPECIFY CAPACITY AND UNITS)

BOILER SERIAL NO.	DATE CONSTRUCTED	DATE OF LAST MODIFICATION (EXPLAIN IN COMMENTS BELOW).

** BOILERS WITH A COMMON STACK WILL HAVE THE SAME STACK NUMBER.

*** CYCLONE, SPREADER (WITH OR WITHOUT REINJECTION), PULVERIZED (WET OR DRY BOTTOM, WITH OR WITHOUT REINJECTION), OTHER STOKER (SPECIFY TYPE), HAND FIRED, AUTOMATIC, OR OTHER TYPE (DESCRIBE BELOW IN COMMENTS).

10. FUEL DATA. (COMPLETE FOR A PROCESS SOURCE WITH IN-PROCESS FUEL OR A NON-PROCESS FUEL BURNING SOURCE)

PRIMARY FUEL TYPE (SPECIFY)					STANDBY FUEL TYPE(S) (SPECIFY)			
FUELS USED	ANNUAL USAGE	HOURLY USAGE DESIGN	HOURLY USAGE AVERAGE	% SULFUR	% ASH	BTU VALUE OF FUEL	(FOR APC ONLY) SCC CODE
NATURAL GAS:	10 CUFT	CUFT	CUFT	//// ////	//// ////	1,000	
#2 FUEL OIL:	10 GAL	GAL	GAL		//// ////		
#5 FUEL OIL:	10 GAL	GAL	GAL		//// ////		
#6 FUEL OIL:	10 GAL	GAL	GAL		//// ////		
COAL:	TONS	LBS	LBS				
WOOD:	TONS	LBS	LBS	//// ////	//// ////		
LIQUID PROPANE:	10 GAL	GAL	GAL	//// ////	//// ////	25,000	
OTHER (SPECIFY TYPE & UNITS:							

11. IF WOOD IS USED AS A FUEL, SPECIFY TYPES AND ESTIMATE PERCENT BY WEIGHT OF BARK.

12. IF WOOD IS USED WITH OTHER FUELS, SPECIFY PERCENT BY WEIGHT OF WOOD CHARGED TO THE BURNER.

13. COMMENTS

Loadouts are all controlled with bag filters (@ 99.99%+, 0.01 gr/scf quarantee). Only one loadout operation will occur at one time, thus only one source will have emissions at one time. (Only one loadout can be hooked up at the Hose Station at once: see diagram.)

14. SIGNATURE | DATE

STATE OF TENNESSEE
DEPARTMENT OF HEALTH + ENVIRONMENT
DIVISION OF AIR POLLUTION CONTROL

TERRA BLDG., 150 9TH AVE. N.
NASHVILLE, TN. 37219-5404
TELEPHONE (615) 741-3931

EMISSION POINT DESCRIPTION

Bagfilter (Starch Loadout)

PLEASE TYPE OR PRINT AND SUBMIT IN DUPLICATE FOR EACH STACK OR EMISSION POINT. ATTACH TO THE PERMIT APPLICATION.

1. ORGANIZATION NAME: A. E. Staley Manufacturing Company | /// | APC COMPANY-POINT NO. FOR

2. EMISSION SOURCE NO. (FROM APPLICATION): 81 (A,B,C,D,) | FLOW DIAGRAM POINT NUMBER: 81 (A,B,C,D,) | /// | APC SEQUENCE NO. APC

3. LOCATION: 662 bldg. | LATITUDE: 35°44'04" | LONGITUDE: 84°19'20" | UTM VERTICAL: 3957.6 Km | UTM HORIZONTAL: 742.1Km

4. BRIEF EMISSION POINT DESCRIPTION (ATTACH A SKETCH IF APPROPRIATE): see flow diagram | DISTANCE TO NEAREST PROPERTY LINE (FT)

COMPLETE LINES 5 AND 6 IF DIFFERENT FROM THAT ON THE PROCESS OR FUEL BURNING SOURCE DESCRIPTION (APC 21)

5. NORMAL OPERATION: HOURS/DAY | DAYS/WEEK | WEEKS/YEAR | DAYS/YEAR

6. PERCENT ANNUAL THROUGHPUT: DEC.-FEB. | MARCH-MAY | JUNE-AUG. | SEPT.-NOV.

7. STACK OR EMISSION POINT DATA:

HEIGHT ABOVE GRADE (FT)	DIAMETER (FT)	TEMPERATURE (°F)	% OF TIME OVER 125°F	DIRECTION OF EXIT (UP, DOWN, OR HORIZONTAL)
50	1	70	0	Horiz

DATA AT EXIT CONDITIONS:	FLOW (ACTUAL FT3/MIN.)	VELOCITY (FT/SEC)	MOISTURE (GRAINS/FT3)	MOISTURE (PERCENT)
	2900			

DATA AT STANDARD CONDITIONS: (70°F, 1ATM)	FLOW (DRY STD. FT3/MIN.)	VELOCITY (FT/SEC)	MOISTURE (GRAINS/FT3)	MOISTURE (PERCENT)

8. AIR CONTAMINANTS — ACTUAL EMISSIONS

AIR CONTAMINANTS	EMISSIONS (LBS/HR) AVERAGE	EMISSIONS (LBS/HR) MAXIMUM	CONCENTRATION	AVG. EMISS (TONS/YR)	EMISSIONS* EST. METHOD	CONTROL DEVICES*	CONTROL EFFICIENCY %
PARTICULATES	0.23	0.23	**	1	2 & 6	017	99.99%+
SULFUR DIOXIDE			***				
NITROGEN OXIDES			PPM				
ORGANIC COMPOUNDS			PPM				
CARBON MONOXIDE			PPM				
FLUORIDES							
OTHER (SPECIFY)							

9. CHECK TYPES OF MONITORING AND RECORDING INSTRUMENTS THAT ARE ATTACHED:
OPACITY MONITOR ( ), SO2 MONITOR ( ), NOX MONITOR ( ), OTHER (SPECIFY IN COMMENTS) ( )

10. COMMENTS: (CONTINUE ON BACK IF NEEDED)

Emissions calculated based upon 0.01 gr/scf after baghouse. (outlet)

11. SIGNATURE | DATE

* REFER TO THE BACK OF THE PERMIT APPLICATION FORM FOR ESTIMATION METHOD AND CONTROL DEVICE CODES.

** EXIT GAS PARTICULATE CONCENTRATION UNITS: PROCESS - GRAINS/DRY STANDARD FT3 (70°F); WOOD FIRED BOILERS - GRAINS/DRY STANDARD FT3 (70°F); ALL OTHER BOILERS - LBS/MILLION BTU HEAT INPUT.

*** EXIT GAS SULFUR DIOXIDE CONCENTRATIONS UNITS: PROCESS - PPM BY VOLUME, DRY BASES; BOILERS - LBS/MILLION BTU HEAT INPUT.

PH-0482

Attachment I: Emissions Summary

A. E. Staley Manufacturing Company
Loudon Facility
Expected Emissions Summary

	TSP	SO_2	NO_x	CO	VOC
New Starch Flash Dryer after cyclones (80)	11	0.1	21	5.2	0.4
New Starch Loadout/Hose Station with 4 alternate sources (81)	1.0	---	---	---	---
New Emissions Total	12.0	0.1	21	5.2	0.4

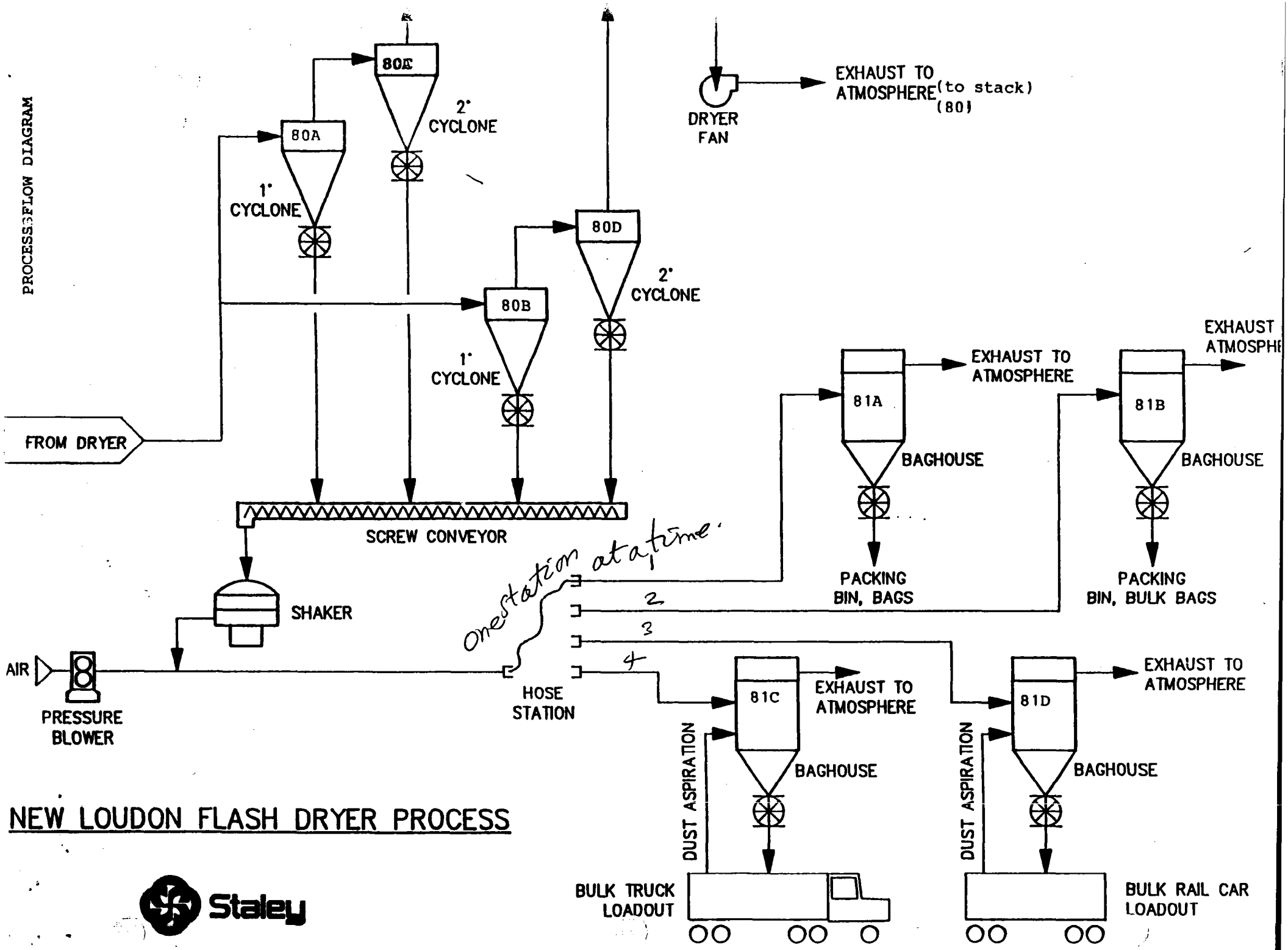
PROCESS FLOW DIAGRAM
80E
2" CYCLONE
80A
1" CYCLONE
80D
2" CYCLONE
80B
1" CYCLONE
DRYER FAN
EXHAUST TO ATMOSPHERE (to stack) (80)
FROM DRYER
SCREW CONVEYOR
SHAKER
AIR
PRESSURE BLOWER
HOSE STATION
one station at a time.
2
3
4
81A
EXHAUST TO ATMOSPHERE
BAGHOUSE
PACKING BIN, BAGS
81B
EXHAUST
ATMOSPHE
BAGHOUSE
PACKING BIN, BULK BAGS
81C
EXHAUST TO ATMOSPHERE
BAGHOUSE
DUST ASPIRATION
BULK TRUCK LOADOUT
81D
EXHAUST TO ATMOSPHERE
BAGHOUSE
DUST ASPIRATION
BULK RAIL CAR LOADOUT
NEW LOUDON FLASH DRYER PROCESS
Staley

COMPANY A.E. Staley Mfg. Co. POLLUTANT TSP DATE 6-11-90

PREPARER JMK

SOURCE DESCRIPTION AND REFERENCE NO.	OPERATION (HRS/DAY) ACT	OPERATION (HRS/DAY) ALLOW	OPERATION (HRS/YR) ACT	OPERATION (HRS/YR) ALLOW	EMISSIONS (LB/HR) ACTUAL	EMISSIONS (LB/HR) POT. TO EMIT	EMISSIONS (LB/HR) ALLOW.	EMISSIONS (TONS/YR) ACTUAL	EMISSIONS (TONS/YR) POT. TO EMIT	EMISSIONS (TONS/YR) ALLOW	STACK HGT. (FT.)	STACK DIA. (FT.)	ACT. STACK VEL. (FT/SEC)	TEMP. (F°)	UTM (KM) (TO NEAREST 100TH) X	UTM (KM) (TO NEAREST 100TH) Y	STA DA ES
53-0081-81															742.10	3957.60	
Dry Starch Loadout	24	24	8400	8760	0.23	0.23	1.0	1.0	1.0	4.4	50	1.0	48	70			
											15.24 m	0.30 m	14.63 m/sec	294 °K			

JMK
6-11-90

50-0081-81
998037P
Starch Loadout System

Emission Calculations

I. Process: Starch Loadout System. Dried starch from the drying system is loaded into four bins. From there, it's loaded onto trucks. Only one loadout station can be used at any one time due to system configuration. Each station is equipped with a baghouse fabric filter at 99.99% efficiency

II. Operating Hours: 7 days/week, 24 hours/day, 50 wks/year (8400 hours/year)

III. Actual Emissions:

TSP = 0.23 #/hr = 1.0 TPY from APC-22

IV. Allowable Emissions:

E_{PWR} = 3.59 (17,000/2000)$^{0.62}$ = 13.53 #/hr

$E_{.02}$ = 2900 · 60 · 0.02 / 7000 = 0.49 #/hr

$E_{.25}$ = 2900 · 60 · 0.25 / 7000 = 6.21 #/hr = 27.2 TPY

see A/L

V. Uncontrolled Potential:

0.23 #/hr / (1 - .9999) = 2300 #/hr
= 10074 TPY

VI. This source and source 50 together cannot exceed 25 TPY in order to avoid PSD. Need A/L to: — over

limit:

53-0081-80 to 19.7 TPY or 4.5 #/hr
53-0081-81 to 4.4 TPY or 1.0 #/hr

Report Copy

STATE OF TENNESSEE
DEPARTMENT OF ENVIRONMENT AND CONSERVATION
9th Floor - L&C Annex
401 Church Street
Nashville, Tennessee 37243-1531

APR 08 1993

Mr. Greg Wenndt
Technical Manager
A. E. Staley Manufacturing Company
Route 3, Box 51
Loudon, TN 37774-9499

Reference Number: 53-0081-~~34~~ 90-A6
Particulate Stack Test Report

Dear Mr. Wenndt:

The Tennessee Division of Air Pollution Control has received the particulate emissions source test report submitted by the A. E. Staley Manufacturing Company for the Starch Spray Dryer Exhaust Stack operated at the facility. This source test was conducted on July 17, 1992, by Mostardi-Platt Associates, Incorporated.

The source test report has been reviewed by the Compliance Monitoring Program. The sampling data appears to be in order, and the report is acceptable.

During the testing period the reported emission rate was was 2.17 pounds per hour with an average concentration of 0.0021 grains per dry standard cubic foot of effluent gas. These emissions demonstrate compliance with the applicable particulate emissions standards of 4.9 pounds per hour and 0.005 grains per dry standard cubic foot of effluent gas. These emission standards are set forth in Condition 2. of the permit (#931256P) issued for the construction of this source.

During the testing period the reported average process weight through the spray dryer was 27,000 pounds per hour of starch slurry with about fifteen percent dry solids. This value is eighty percent of the maximum permitted process weight through the source. The maximum proces weight through the spray dryer is set at 33,800 pounds per hour by condition 1. of the above listed construction permit. The agency considers the operation of the process during the

APR 08 1993

testing period as being acceptable for compliance demonstration purposes. Thus, the agency hereby accepts this test report as fulfilling the permit stipulated testing requirement and as demonstrating compliance with the applicable particulate emissions standards.

Should you have any questions concerning the matters addressed by this letter, please contact either Mr. Jeryl Stewart or Mr. Alvin Pratt at (615) 532-0554.

Sincerely,

Jeryl W. Stewart

John W. Walton
for Technical Secretary
Tennessee Air Pollution Control Board

cc: Knoxville Field Office

A.E. STALEY MANUFACTURING COMPANY 2200 E. ELDORADO STREET DECATUR, ILLINOIS 62525 TELEPHONE 217/423-4411

September 30, 1992

RECEIVED
DATE OCT 05 1992
CO. NO.
I.D A 1 2 3 4 5 6
B 1 2 3 4 5
CS
OTHER

CERTIFIED MAIL

Tennessee Department of Environment
and Construction
Air Pollution Control Division
9th Floor - L & C Annex
403 Church Street
Nashville, Tennessee 37243-1531

Attention: Harold E. Hodges, P.E.
Technical Secretary

Reference: A. E. Staley Manufacturing Company
Loudon, Tennessee Plant
Performance Test Results
Construction Permit No. 931256P
Emission Source No. 53-0081-90

Gentlemen:

Please find enclosed in triplicate results of the July 17, 1992 particulate stack test as per the above referenced construction permit. Also included in the bound report is a description of operating conditions during the test. A summary of the testing is provided below for your reference.

Particulate Test Results Summary*

Maximum Emission Rate:	3.134 lbs/hr
Maximum Grain Loading:	.0032 gr/dscf
Gas Flow Rate:	167,369

*Maximum results of 3-USEPA Method 5 Tests

Please note that the results indicate that the tested source emissions are under permitted levels of 5.101 lbs/bu and 0.005 gr/ascf. The tests were conducted at a dryer feed rate of 47.13 gallons per minute or about 27,000 pounds per hour, representative of current operating conditions.

In conclusion, an operating permit application for this source has been sent to Dave Carson of the Department permit section. If you have any questions or comments, please contact me at (217)421-2503.

Sincerely,

James A. Hoyt
Environmental Engineer

098:jah

Attachments

cc: B. D. Byrer
W. A. Lee
G. M. Wenndt