Note: This is a reference cited in *AP 42, Compilation of Air Pollutant Emission Factors, Volume I Stationary Point and Area Sources.* AP42 is located on the EPA web site at www.epa.gov/ttn/chief/ap42/

The file name refers to the reference number, the AP42 chapter and section. The file name "ref02_c01s02.pdf" would mean the reference is from AP42 chapter 1 section 2. The reference may be from a previous version of the section and no longer cited. The primary source should always be checked.

AP-42 Section 11.6
Reference 32
Report Sect. 4
Reference 25

Source category: Portland Cement
Plant name : Leeds Portland Cement Co.
Test date : 9/17 - 9/21/84
Process : dry

Date: 01/12/93
Location: Leeds, AL
Ref. No.: 25
Basis for process rate : kiln feed

Source	Type of control	Pollutant	Run No.	Emission rate, lb/hr	Process rate, ton/hr	Emission factor kg/Mg	Emission factor lb/ton	Volumetric flow rate, DSCFH	Concen ppm
rotary kiln w/ suspension preheater (coal-fired)	ESP	BASED ON FEED RATE							
		filt. PM	2	24.61	140	0.0879	0.1758		
		filt. PM	3	25.40	138	0.0920	0.1841		
		filt. PM	4	16.74	135	0.0620	0.1240		
		filt. PM	5	15.66	134	0.0584	0.1169		
		AVERAGE				0.0751	0.1502	RATING:	B
		CO2	2	141,724	140	506	1,012	6,543,110	19.0
		CO2	3	140,901	138	511	1,021	6,505,131	19.0
		CO2	4	134,203	135	497	994	6,261,813	18.8
		CO2	5	131,152	134	489	979	6,119,463	18.8
		AVERAGE				501	1,002	RATING:	B
clinker cooler	cyclone + gravel bed filter	BASED ON KILN FEED RATE							
		filt. PM	8	73.85	154	0.2398	0.4795		
		filt. PM	9	38.92	163	0.1194	0.2388		
		filt. PM	10	49.90	155	0.1610	0.3219		
		AVERAGE				ERR	ERR	RATING:	B
		CO2	8	3,676	140	13.1	26.3	4,606,761	0.7
		CO2	9	4,103	138	14.9	29.7	5,141,971	0.7
		CO2	10	4,696	135	17.4	34.8	5,884,683	0.7
		AVERAGE			134	15.1	30.3	RATING:	B

Notes:
1. Raw mill data not useable because mill is ducted to same stack as kiln.
2. Kiln emission factors for emissions with mill off only.
3. Note that cooler emission factors are based on kilns feed rate; cooler feed rate not provided in report.

Section III
DESCRIPTION OF INSTALLATION - GENERAL

The progression of materials through the facility at Universal Atlas Cement in Leeds, Alabama, begins at the raw grinding department. The raw grinding department receives proportional raw materials and grinds them to the proper size. Acceptable size finished products are transferred from the raw mill area to blending/storage silos via a pumping system.

A feed bin receives the proportioned raw materials, and a constant level is maintained in the feed bin by a weight controller on the central control panel. From the mill feed bin the raw mix is delivered to the Loesche Mill feed chute via a weigh feeder. The chute contains a triple gate feeder which serves as an air lock for the Loesche Mill. Material out of the chute falls on a circular grinding bed and is thrown by centrifugal force under the grinding rollers. A retention ring on the periphery of the grinding bed forms the material into a predetermined, uniform thickness. The ground material spills over the edge of the retention ring and is elevated to a rotary classifier at the top of the mill by an air stream passing up through the angular louvers at the periphery of the grinding bed. The classifier separates the fines from the coarse particles - the coarse falling back into the grinding bed. The finer particles are carried by the air stream to an electrostatic precipitator. The product discharge from the precipitator is then sampled and transferred to the blending/storage silo via the pumping system.

The Loesch Mill is also air swept for simultaneous drying of the raw material by hot gases from the preheater. In case

no waste gases are available, the hot air for drying is produced by an air furnace which is equipped with automatic temperature controls. When the Loesche Mill is not operating, kiln gases are diverted through a conditioning tower to maintain suitable characteristics for particular collection by the precipitator.

Blending of raw materials occurs in a silo which utilizes a four-way cycling air valve to provide a uniform mix. Withdrawal from the blending silo is of the continuous overflow type which transports material via an air slide system to a selected storage silo. A rotary valve located at the bottom of the blending silo is used for direct removal of mateial into storage silo #1. Each storage silo is capable of two material withdrawal options. The normal material flow is through a level box and weighing system with the subsequent transport of material to the preheater by a pump. A bypass option routes the material around the weighing system to a pump for recirculation into the blending silo.

Dry Process

The preheater, rotary kiln, and clinker cooler transform the blended raw material into the clinker product. Raw material is clinkered by the intense heat flowing through the kiln and preheater. Clinker from the kiln discharges at approximately 2600°F and is quickly reduced to approximately 150°F at the discharge of the clinker cooler.

Hot kiln waste gases enter the refractory lined preheater through the duct beneath the kiln and stage #14 of the preheater; the gases are drawn up through the four stages by a fan. The gases from the kiln enter stage #4 at about 1900°F and leave stage #1 at about 650°F. Kiln feed enters the preheater and passes counter to the gas flow; material particles absorb heat as they mix with the hot gases.

Blended kiln feed material pumped from the storage silos enters the top of the preheater through the gas duct between stages #1 and #2. Heat is transferred from the gases to the pulverized material that is descending through the cyclones. The preheater quickly raises the temperature of the dry blended raw material from approximately 140°F to about 1450°F in four progressively hotter stages. The feed forms a suspended cloud as it mixes with the exhaust gases. Kiln waste gases provide all the heat required by the preheater. The preheater feed rate is controlled by kiln speed. The feed ratio to the kiln revolution ratio can be changed at any time.

Clinker discharges by gravity from the kiln into a six compartment grate cooler that is equipped with a clinker breaker at the discharge end. The clinker cooler performs four functions: (1) it quickly cools clinker, (2) it recovers heat from use in the kiln and other departments, (3) it reduces clinker to desired size, and (4) it drags cooled clinker to a belt conveyor.

The cooler has six fans that force air at ambient temperatures through the bed of hot clinker for quick temperature reduction. Heated air that has passed through the clinker bed has three possible exits; through the cyclone gravel bed filter, the kiln, or the coal mill. Coal is the principal fuel for firing the kiln. If needed, #2 oil is present for start-up purposes and emergency firing.

A process flow diagram is shown by Figure 3-1.

GENERAL DESCRIPTION OF THE FILTER - CLINKER COOLER

The system consists of twelve (12) cyclone/filter bed modules operating in parallel from a main inlet chamber.

The operation of each cyclone/filter module is identical. Figure 3.2 illustrates the details of a cyclone/filter module.

NOTE: Double filter modules differ only in the fact that there are two (2) valves, beds and rakes for each cyclone. The sequence described below would occur simultaneously in both of the filter beds located over a particular cyclone.

Raw dust-laden gas enters the module from the inlet chamber (1) into the cyclone. The cyclone (2) removes the coarse dust and the gas flow moves up the vortex tube (4) into the filter chamber (5). The removed dust is discharged via the tipping gates (3). The gas flow then is directed through the filter media (6), where the remaining dust is removed. The gas then passes through the media support screen (7), into the clean gas chamber (8), and through the clean gas outlet duct (9).

The above described process continues until the filter bed becomes sufficiently coated with dust to require cleaning. At this point, the cyclone/filter module is isolated from the clean gas stream by actuation of the backwash control valve (10) via the valve operator (12). At this point, the module has entered the bed cleaning or backflush mode. This mode is illustrated in Figure 3.3. During bed cleaning, clean air enters the unit through the backflush air inlet (11) and is directed upward through the filter media (6). During this period, the stirring rake (13) is activated via the stirring rake motor (14). During the combined rake and air flushing, the dust is removed from the filter media and directed down the vortex tube (4). This dust is an agglomerated particles significantly larger than when they first reached the gravel bed. Some of the resuspended dust

is removed in the cyclone (2); the remainder passes into the inlet chamber (1) where more of the dust is removed because of the greatly reduced velocities. The backflush gases and the balance of agglomerated dust is distributed to the other cyclone/filter modules for removal by cyclonic action. Only one (1) filter module (having one (1) filter bed on SB units and two (2) filter beds on DB units) is removed at a time for cleaning. The cleaning cycle is controlled by timers located in the control panel.

jh/MISC2/013

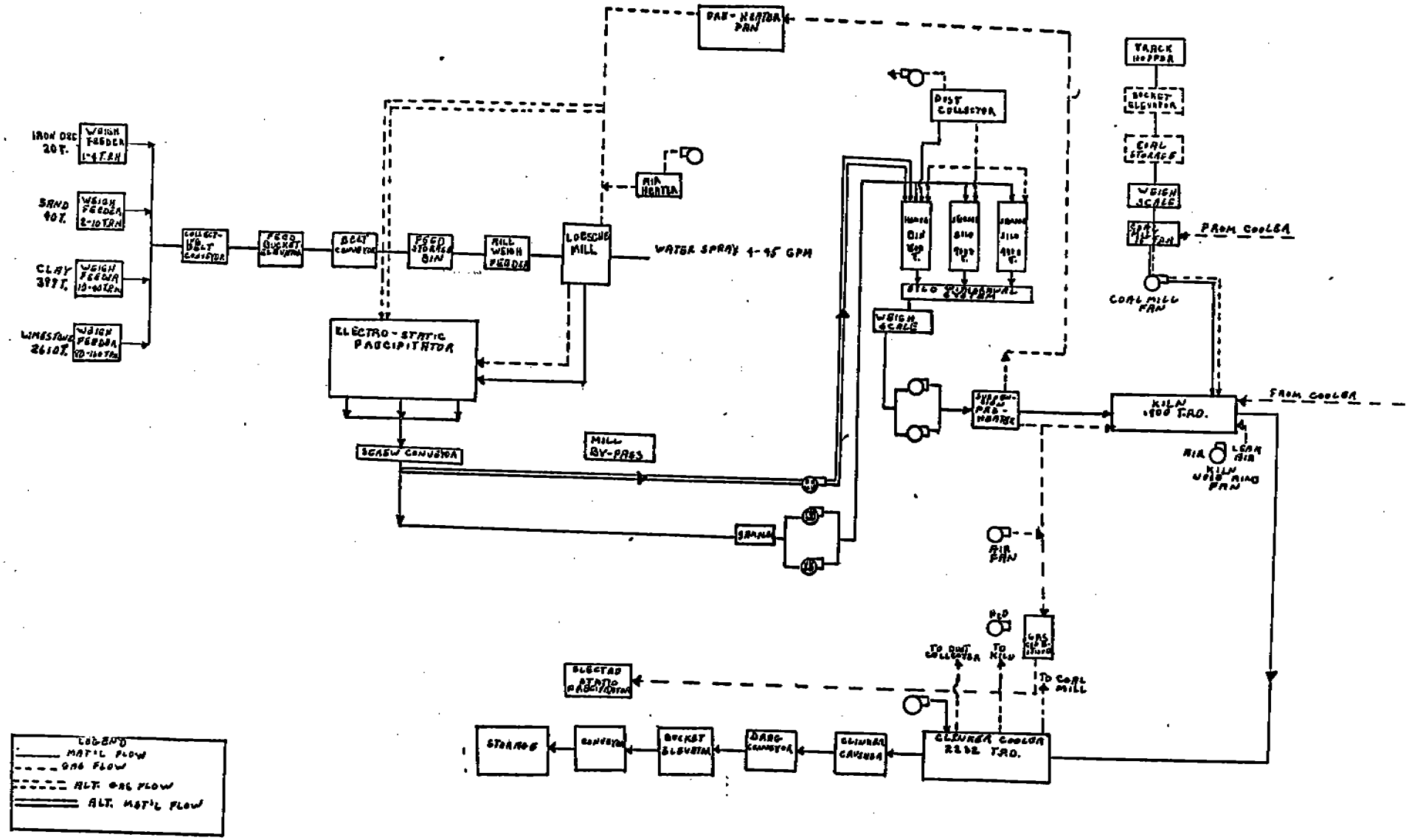

Figure 3-1 Process Flow Diagram.

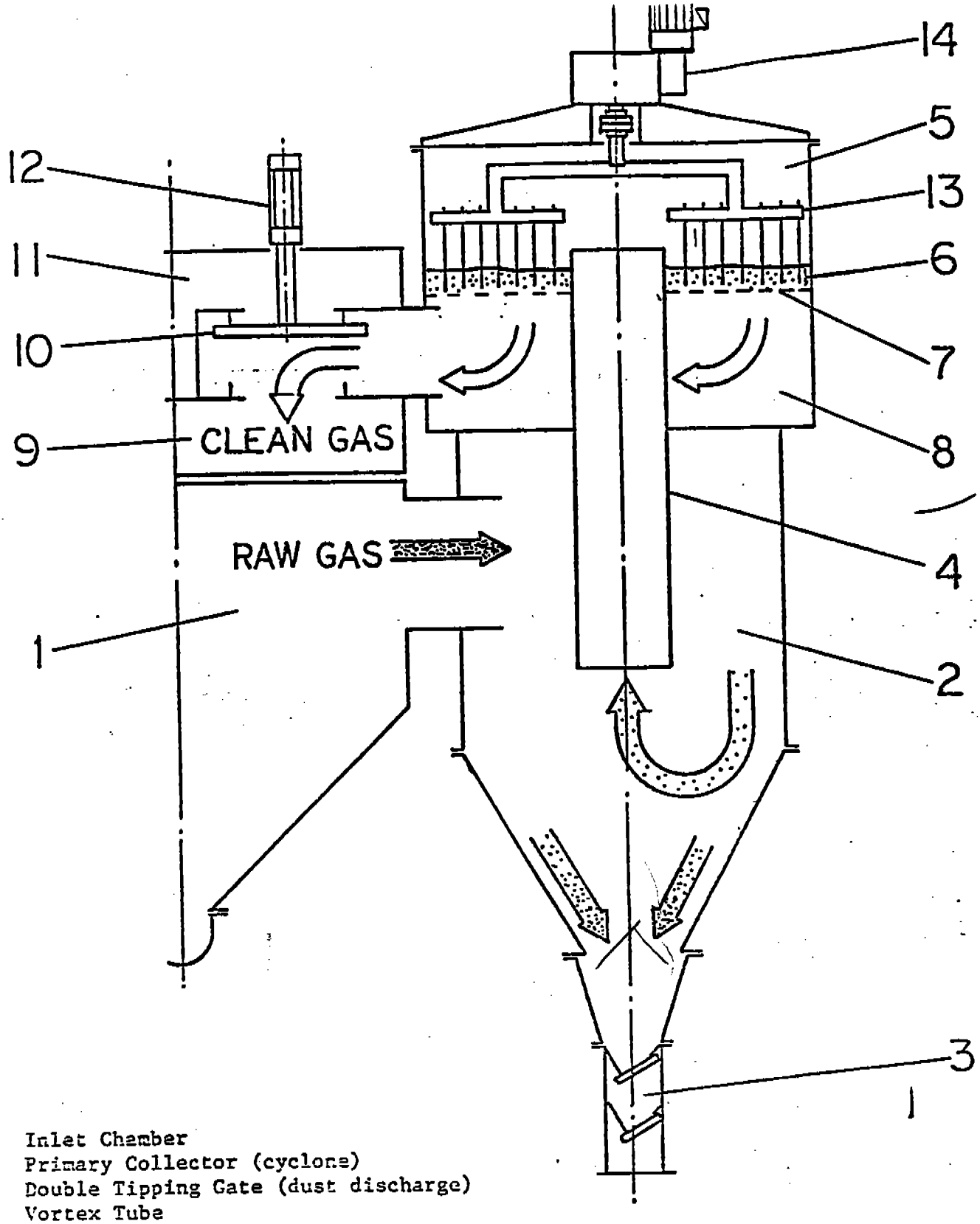

1. Inlet Chamber
2. Primary Collector (cyclone)
3. Double Tipping Gate (dust discharge)
4. Vortex Tube
5. Filter Chamber
6. Gravel Bed
7. Screen Support for Bed
8. Clean Gas Collection Chamber
9. Exhaust Port
10. Backwash Control Valve
11. Backwash Air Inlet
12. Valve Cylinder
13. Stirring Rake
14. Stirring Rake Motor/Reducers

FIGURE 3-2

OPERATING PHASE

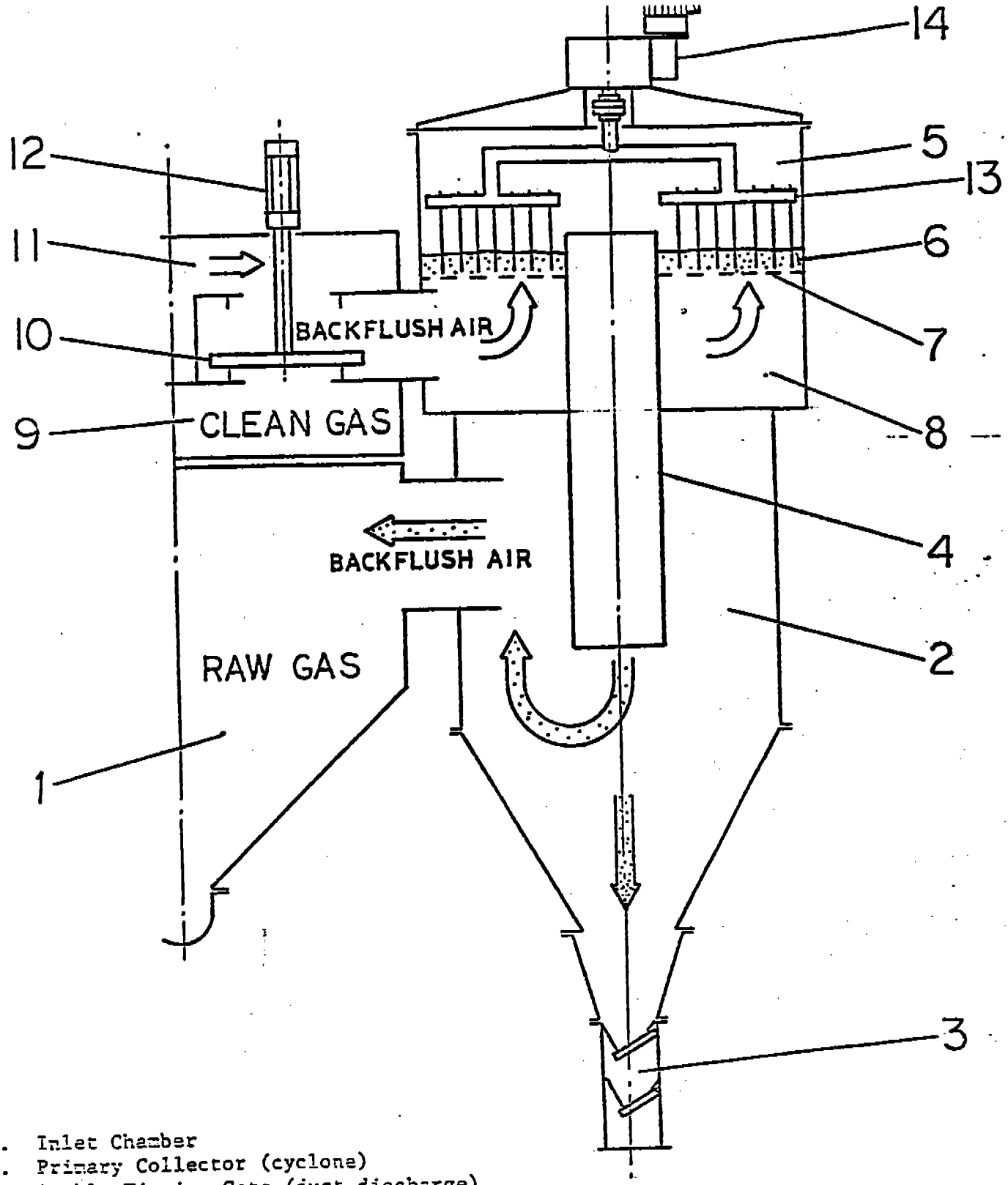

1. Inlet Chamber
2. Primary Collector (cyclone)
3. Double Tipping Gate (dust discharge)
4. Vortex Tube
5. Filter Chamber
6. Gravel Bed
7. Screen Support for Bed
8. Clean Gas Collection Chamber
9. Exhaust Port
10. Backwash Control Valve
11. Backwash Air Inlet
12. Valve Cylinder
13. Stirring Rake
14. Stirring Rake Motor/Reducers

FIGURE 3-3

CLEANING PHASE

Section IV
SAMPLING AND ANALYTICAL PROCEDURES

Sampling Location and Procedures

An EPA sampling train as described in the Air Pollution Control Office publication APTD-0581 was used for this study. Figure 4-1 shows a schematic of this sampling equipment. The only modification to this configuration was the substitution of a right angle for the cyclone and flask.

Layout of the sampling ports in relation to flow disturbances for the Loesche Mill main stack is shown by Figure 4-2, and for the Clinker Cooler Stack, Figure 4-3. Based on the stack diameters and the upstream and downstream distances of the sampling ports from the closest flow disturbances the required number of sampling points according to methods prescribed in the Federal Register, was determined. Table 4-1 shows the dimensions from the stack wall to each sampling point on the main (ESP) stack, while Table 4-2 shows this for the Clinker Cooler stack. Sampling was conducted through four (4) ports on each source.

Prior to the start of the first sampling run, velocity traverses, and temperature readings were made in the stack. Moisture was estimated from previous sampling data. Using the above data, the nomograph was set up to utilize an appropriate size nozzle. Settings for the nomograph and the exact nozzle diameter are shown on the field data sheets (Appendix).

The sampling procedures followed were as outlined by Method 5 from the previously mentioned Federal Register. Sampling data for each run is a part of the Appendix. As noted by the data sheets, each point was sampling for three minutes

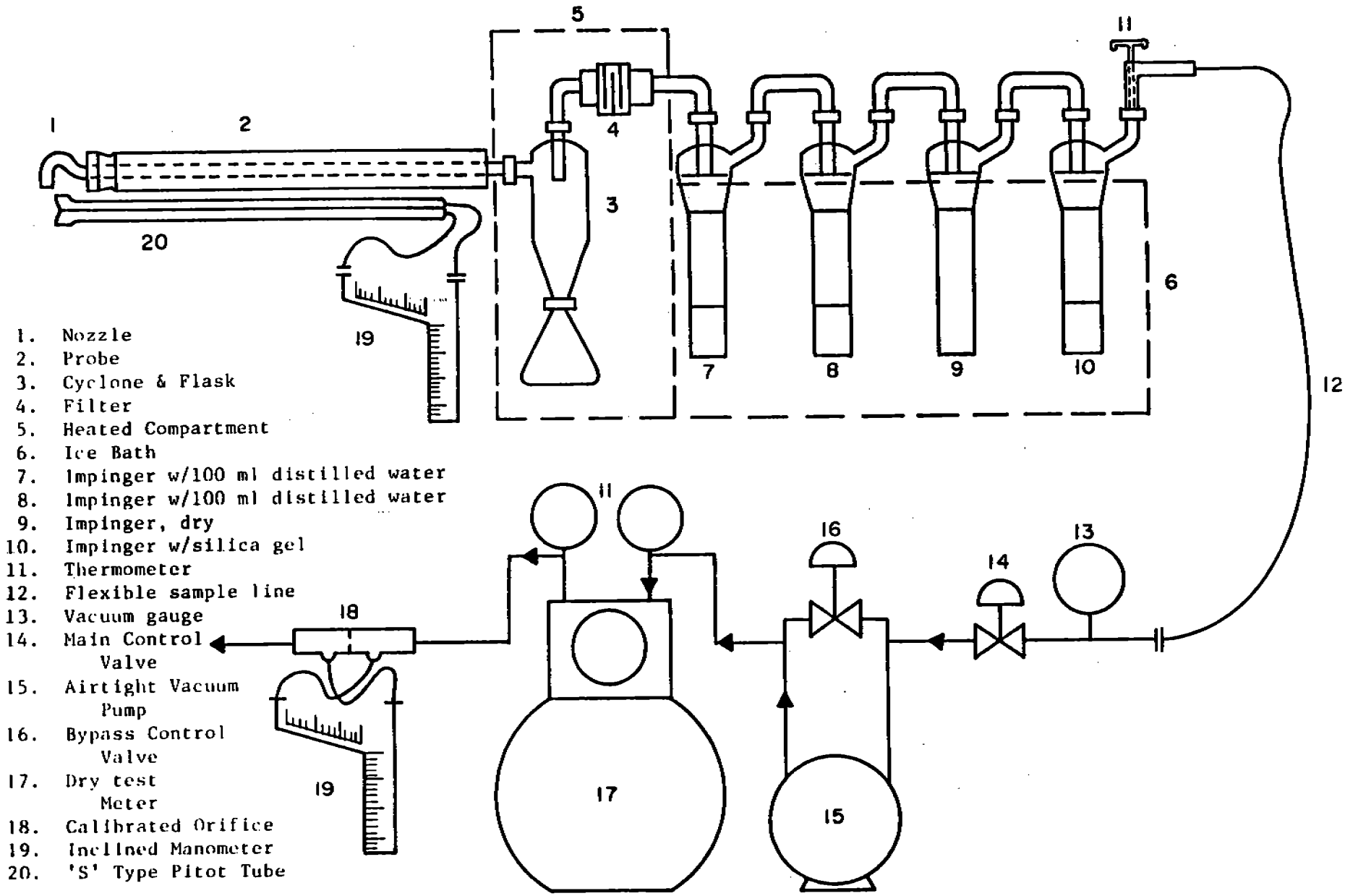

FIGURE 4-1. PARTICULATE SAMPLING TRAIN

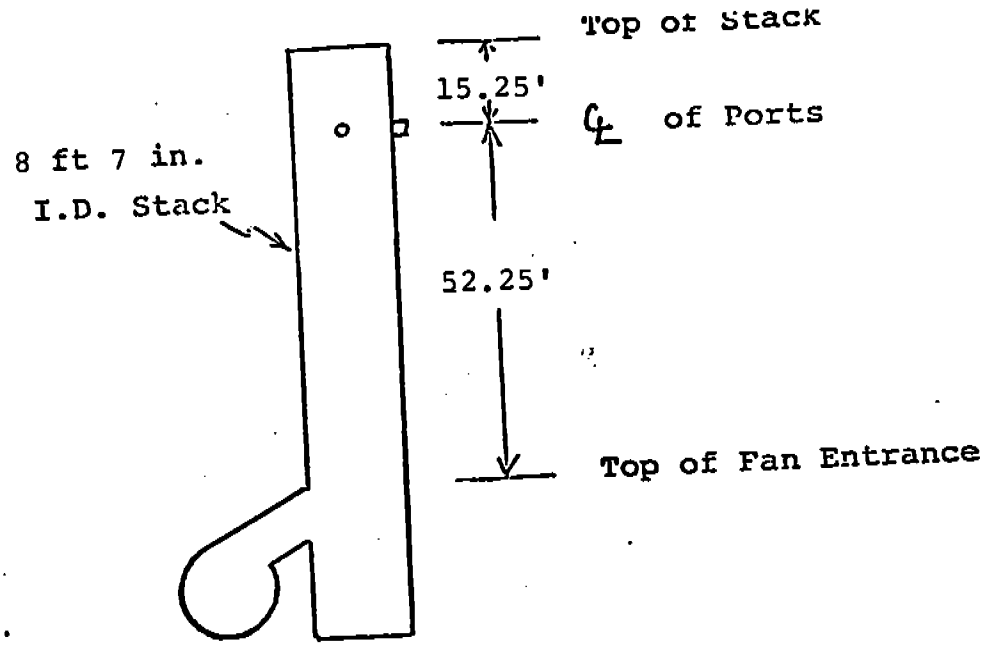

FIGURE 4-2.

Location of Sampling Ports - Main Stack
Sampling Conducted Through Four Ports

Table 4-1.
Location of Sampling Points

Point	% of Stack I.D.	X Stack I.D. (inches)	=	Distance from Port (inches)
1	3.3	103		3.3
2	10.5	103		10.8
3	19.4	103		20.0
4	32.3	103		33.3

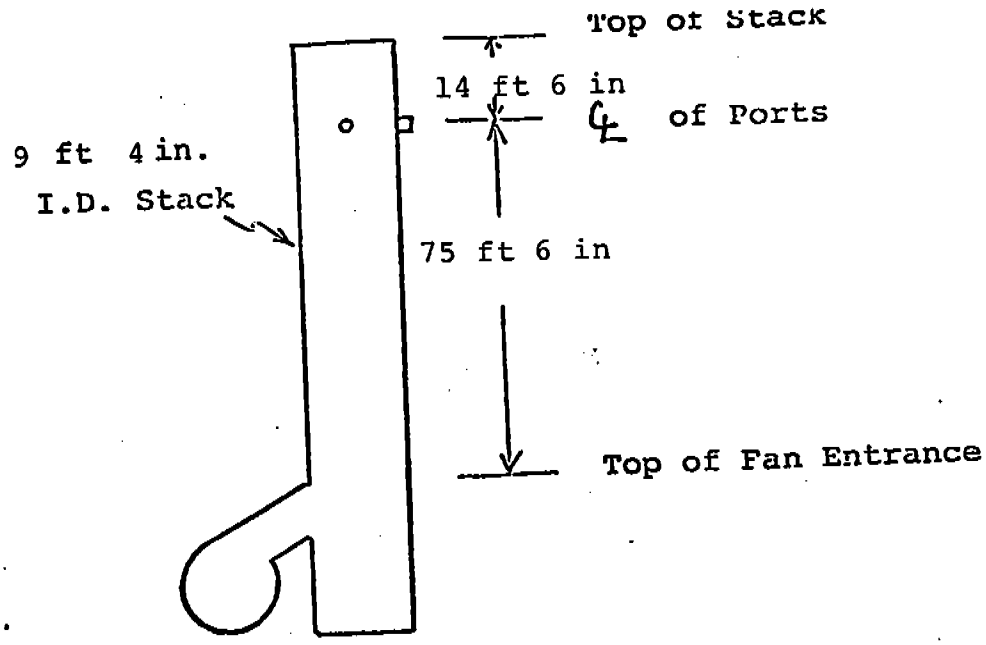

FIGURE 4-3.

Location of Sampling Ports - Clinker Cooler
Sampling Conducted Through Four Ports

Table 4-2.
Location of Sampling Points

Point	% of Stack I.D.	X Stack I.D. (inches)	=	Distance from Port (inches)
1	2.6	112		2.9
2	8.2	112		9.2
3	14.6	112		16.4
4	22.6	112		25.3
5	34.2	112		38.3

APPENDIX A

LABORATORY DATA

CH2M HILL

MONTGOMERY OFFICE
807 SOUTH McDONOUGH STREET
MONTGOMERY, ALABAMA 36104
TELEPHONE 205/834-2870

Client Lehigh
Date 9/24 Weighings By AM
Sampling Location Main
Remarks:

LABORATORY DATA

PARTICULATE SOURCE	RUN # 1 MILL ON			RUN # 2 MILL OFF			RUN # 3 MILL OFF			RUN ~~BLANKS~~ 4 MILL OFF		
	Final Wt (g)	Initial Wt (g)	Diff. (g)	Final Wt (g)	Initial Wt (g)	Diff. (g)	Final Wt (g)	Initial Wt (g)	Diff. (g)	Final Wt (g)	Initial Wt (g)	Diff. (g)
PROBE & CYCLONE WASH	115.7474g 100 ml	M-10 115.7255	.0219	104.3689g 120 ml	#5 104.3359	.0330	101.8042g 100 ml	#6 101.7732	.0310	102.5258g 80 ml	#4 102.5053	.0205
FILTER	.4985	#37 .4441	.0544	.4928	#38 .4500	.0428	.4947	#39 .4468	.0479	.4849	#40 .4529	.0320
IMPINGERS ACETONE WASH												
IMPINGERS H_2O												
	Gross Weight		.0763	Gross Weight		.0758	Gross Weight		.0789	Total Blank Wt.		.0525
	Less Blank Wt.		-.0002	Less Blank Wt.		-.0002	Less Blank Wt.		-.0002			-.0002
	Net Weight		.0761	Net Weight		.0756	Net Weight		.0787			.0523

NOTE: The weight of the probe and cyclone wash blank for each sample is in direct proportion to the weight of the actual blank based on volume.

SILICA GEL	Final Wt (g)	Initial Wt (g)	Diff. (g)	Final Wt (g)	Initial Wt (g)	Diff. (g)	Final Wt (g)	Initial Wt (g)	Diff. (g)	Final Wt (g)	Initial Wt (g)	Diff. (g)

CH2M HILL

MONTGOMERY OFFICE
807 SOUTH McDONOUGH STREET
MONTGOMERY, ALABAMA 36104
TELEPHONE 205/834-2870

Client Lehigh
Date 9/24 Weighings By Am
Sampling Location Main
Remarks:

LABORATORY DATA

PARTICULATE SOURCE	RUN # 25 Final Wt (g)	RUN # 25 Initial Wt (g)	RUN # 25 Diff. (g)	RUN # 26 Final Wt (g)	RUN # 26 Initial Wt (g)	RUN # 26 Diff. (g)	RUN # 27 Final Wt (g)	RUN # 27 Initial Wt (g)	RUN # 27 Diff. (g)	BLANKS Final Wt (g)	BLANKS Initial Wt (g)	BLANKS Diff. (g)
PROBE & CYCLONE WASH	111.6939 g 75 ml	#25 111.6781	.0158	110.7041 g 130 ml	#24 110.6863	.0178	117.7346 g 120 ml	#A 117.7193	.0153	g ml		
FILTER	.4975	#41 .4643	.0332	.4754	#42 .4509	.0245	.4753	#43 .4512	.0241			
IMPINGERS ACETONE WASH												
IMPINGERS H_2O												
	Gross Weight		.0490	Gross Weight		.0423	Gross Weight		.0394	Total Blank Wt.		
	Less Blank Wt.		-.0002	Less Blank Wt.		-.0003	Less Blank Wt.		-.0002			
	Net Weight		.0488	Net Weight		.0420	Net Weight		.0392			

NOTE: The weight of the probe and cyclone wash blank for each sample is in direct proportion to the weight of the actual blank based on volume.

SILICA GEL	Final Wt (g)	Initial Wt (g)	Diff. (g)	Final Wt (g)	Initial Wt (g)	Diff. (g)	Final Wt (g)	Initial Wt (g)	Diff. (g)	Final Wt (g)	Initial Wt (g)	Diff. (g)

CH2M HILL

MONTGOMERY OFFICE
807 SOUTH McDONOUGH STREET
MONTGOMERY, ALABAMA 36104
TELEPHONE 205/834-2870

Client: Lehigh
Date: 9/24 Weighings By: Dm
Sampling Location: CLINKER COOLER
Remarks:

LABORATORY DATA

PARTICULATE SOURCE	RUN # 1 (9) Final Wt (g)	RUN # 1 Initial Wt (g)	RUN # 1 Diff. (g)	RUN # 2 (9) Final Wt (g)	RUN # 2 Initial Wt (g)	RUN # 2 Diff. (g)	RUN # 3 (10) Final Wt (g)	RUN # 3 Initial Wt (g)	RUN # 3 Diff. (g)	BLANKS Final Wt (g)	BLANKS Initial Wt (g)	BLANKS Diff. (g)
PROBE & CYCLONE WASH	101.3429g 110 ml	#36 101.2234	.1195	112.5563 g 100 ml	#7 112.5063	.0500	106.1125g 90 ml	#6 106.0707	.0418	109.3206g 100 ml	#28 109.3204	+.0002
FILTER	.5284	#45 .4585	.0699	.5171	#44 .4641	.0530	.4030	#21 .3136	.0894			
IMPINGERS ACETONE WASH												
IMPINGERS H_2O												
	Gross Weight		.1894	Gross Weight		.1030	Gross Weight		.1312	Total Blank Wt.		.0002/100
	Less Blank Wt.		-.0002	Less Blank Wt.		-.0002	Less Blank Wt.		-.0002			
	Net Weight		.1892	Net Weight		.1028	Net Weight		.1310			

NOTE: The weight of the probe and cyclone wash blank for each sample is in direct proportion to the weight of the actual blank based on volume.

SILICA GEL	Final Wt (g)	Initial Wt (g)	Diff. (g)	Final Wt (g)	Initial Wt (g)	Diff. (g)	Final Wt (g)	Initial Wt (g)	Diff. (g)	Final Wt (g)	Initial Wt (g)	Diff. (g)

APPENDIX B

FIELD DATA SHEETS

LOESCHE MILL "ON"

RUNS 1, 6, 7

CH2M HILL
MONTGOMERY OFFICE
807 SOUTH McDONOUGH STREET
MONTGOMERY, ALABAMA 36104
205/834-2870 A DIVISION OF CH2M HILL

Visit JCOA 9/17/84

PLANT Lehigh
DATE 9/17/84 RUN NUMBER 1
TIME START 1446 TIME END 1559
MATERIAL PROCESSING RATE LOESCHE MILL ON
SAMPLING LOCATION MAIN
WEATHER P/C
AMBIENT TEMP. 82 °F STACK PRESS. -0.60 (29.936) in
BAROMETRIC PRESS. 29.98 "Hg WET BULB °F
DRY BULB °F MOISTURE %
DEW POINT °F

TEST CONDUCTED BY: Martin / Cooper

NOZZLE DIA. .258 in. FILTER NUMBER
PITOT CORR. FACTOR .85 SILICA GEL NUMBER
ORIFICE CORR. FACTOR 1.855

READING	GAS METER	IMPINGER COND.
FINAL	518.322	340
INITIAL	462.266	200
NET	56.056	140

ORSAT READING

% CO_2	13.0	16.0	4.0
% O_2	10.0	10.0	10.0
% CO			
% N_2			

SKETCH:

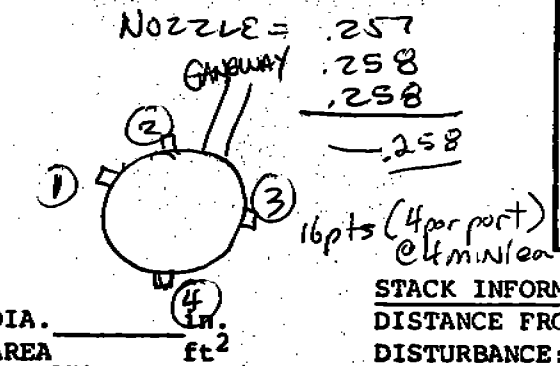

DIA. in.
AREA ft²

FINAL LEAK CHECK
SAMPLE TRAIN AT 8 in. Hg
FINAL 8.367
INITIAL 8.360
LEAK .007 /min
PITOT .014 MIN 30 sec
IMPACT 0 at 3.4 in.
STATIC 0 at 3.5 in.

STACK INFORMATION
DISTANCE FROM DISTURBANCE: DOWNSTREAM ft.
UPSTREAM ft.

Silica gel = 16.5 g

REMARKS: T_m = 95, %H_2O = 15 (from prior data)
C = 0.85, T_s = 205, Δp = 0.60

PORT # / POINT #	DISTANCE FROM PORT (in.)	TIME	GAS METER VOLUME (ft^3)	STACK VELOCITY HEAD-Δp (in. H_2O)	$\sqrt{\Delta p}$	ORIFICE VELOCITY HEAD-Δp (in. H_2O)	GAS METER TEMP. T_m (°F) INLET	GAS METER TEMP. T_m (°F) OUTLET	STACK TEMP.-T_s (°F)	IMPINGER TEMP. (°F)	BOX TEMP. °C	VACUUM (in. Hg)
1/1	1446	0	—	0.62	.787	1.90	82		200	65	130	—
2	"	4	465.3	0.65	.806	2.00	82		200	65	130	—
3	"	8	469.0	0.77	.878	2.35	83		200	65	130	—
4		12	472.2	0.80	.894	2.45	85		200	65	130	1.5
2/1	1504:30	0	475.6	0.70	.837	2.05	85		200	65	130	1.5
2	"	4	478.7	0.85	.922	2.55	85		200	65	130	2.0
3	"	8	482.4	0.90	.949	2.70	87		200	65	130	2.0
4	"	12	486.0	0.88	.938	2.65	87		200	65	130	2.0

Lehigh - Run - 1

PORT # / POINT #	DISTANCE FROM PORT (in.)	TIME	GAS METER VOLUME (ft^3)	STACK VELOCITY HEAD- p (in. H_2O)	$\sqrt{\Delta p}$	ORIFICE VELOCITY HEAD- H (in. H_2O)	GAS METER TEMP. T_m (°F) INLET	GAS METER TEMP. T_m (°F) OUTLET	STACK TEMP.-T_s (°F)	INPINGER TEMP. (°F)	BOX TEMP. °C	VACUUM (in. Hg)
3/1	3:23:30	0	490.9	0.81	.900	2.40	87		200	60	140	2.0
2	"	4	493.4	0.85	.922	2.50	87		200	60	140	2.0
3	"	8	497.7	0.90	.949	2.70	88		200	60	140	2.5
4	~~3:35:30~~	12	501.3	0.817	.933	2.65	88		200	60	140	2.5
	OFF @ 3:36:30 ON @ 3:38:30 CHECKED PROBE HEAT											
4/1		3:39:00 0	504.9	0.65	.806	1.95	88		200	60	140	2.0
2		" 4	507.9	~~0.70~~ 0.73	.854	2.18	88		200	60	140	2.0
3		" 8	511.4	0.80	.894	2.40	88		200	60	140	2.0
4		" 12	514.9	0.80	.894	2.40	88		200	60	140	2.5
					14.163	37.83	1378					
					.885	2.364		86	200			

PARTICULATE EMISSION DATA CALCULATION SHEET

CH2M HILL

MONTGOMERY OFFICE

807 SOUTH McDONOUGH STREET
MONTGOMERY, ALABAMA 36104
205/834-2870

Plant Lehigh

Date 9/17 Run # 1

Sampling Location MAIN - LOESCHE MILL ON

Sampling Data

$\bar{T}_s$ = 660 °R; $\bar{T}_m$ = 546 °R

C_p = .85; $(\sqrt{\Delta p})_{avg}$ = .885

P_s = 29.936 in.Hg; M_s = 29.398 g/g-mole

A_s = ~~68.417~~ 57.863 sq.ft.; V_m = 56.056 cu.ft.

H_2O (condensate) = 140 mls

H_2O (silica gel) = 16.5 grams

ΔH_{avg} = 2.364 in H_2O; P_b = 29.98 in Hg

Total particulate = 0.0761 grams

1. Calculate Stack gas velocity--

$$V_s = 85.49\ C_p\ (\sqrt{\Delta p})_{avg} \sqrt{\frac{T_s}{P_s M_s}}$$

$$V_s = 85.49\ (.85)(.885) \sqrt{\frac{660}{(29.936)(29.398)}}$$

V_s = 55.692 fps

2. Calculate volume of water vapor in gas sample--

$$V_{wstd} = (0.0474)\begin{pmatrix}\text{mls } H_2O & \text{grams } H_2O \\ \text{condensate} & + \text{ silica gel}\end{pmatrix}$$

$$V_{wstd} = (0.0474)(140 + 16.5) = (0.0474)\ (156.5) = 7.418 \text{ cu.ft.}$$

3. Calculate gas sample volume at standard conditions--

$$V_{mstd} = (17.64)(V_m)\left(\frac{P_b + \frac{\Delta H}{13.6}}{T_m}\right)$$

$$V_{mstd} = (17.64)(56.056)\left(\frac{29.98 + \frac{2.364}{13.6}}{546}\right) = (___)(.0552) = 54.6098 \text{ cu.ft.}$$

4. Calculate percent moisture in gas stream--

$$B_{ws} = \frac{V_{wstd}}{V_{mstd} + V_{wstd}} = \frac{7.418}{54.6098 + 7.418} = .1196 = 12.0\ \%$$

5. Calculate stack gas volumetric flow rate, dry basis, std. conditions--

$$Q_{stpd} = 3600(1-B_{ws})V_s A_s \frac{528}{T_s} \frac{P_s}{29.92}$$

$$Q_{stpd} = 3600\ (1-.12)(55.692)\left(\frac{\cancel{68.417}}{57.863}\right)(528/660)(29.936/29.92) = _____ \text{ cu.ft./min}$$

8,171,487 ~~9,661,937~~ Dan ~~161,032 ft3~~

6. Calculate grain loading--

grains/sdcf = (15.43)(grams)/V_{mstd} = (15.43)(.0761)/(54.6098) = 0.0215

7. Calculate mass emission rate--

$$\text{lbs/hr} = (\text{grains/stdcf})(Q_{stpd})(1.43 \times 10^{-4})$$

$$\text{lbs/hr} = (\cancel{9,661,937}\ 8,171,487)(.0215)(1.43 \times 10^{-4}) = 25.12$$

CH2M HILL

MONTGOMERY OFFICE

807 SOUTH McDONOUGH STREET
MONTGOMERY, ALABAMA 36104
205/834-2870

Client Lehigh

Date 9/17 Run # 1

Sampling Location Main

CALCULATION OF STACK GAS MOLECULAR WEIGHT (M_s)

Average Orsat Analysis (dry)

$\%CO_2$ = 15

$\%O_2$ = 10

$\%CO$ = —

$\%N_2$ = 75

Moisture Content = 12 %

Component	% Vol/100	X	Moisture Correction	X	Molecular Weight	=	Wt./Mole (wet base)
H_2O	.120	x	1.0	x	18.0	=	2.160
CO_2	.150	x	.88	x	44.0	=	5.810
O_2	.100	x	.88	x	32.0	=	2.816
CO	—	x	—	x	28.0	=	—
N_2	.750	x	.88	x	28.2	=	18.612

Average Molecular Wt., wet basis (M_s) = 29.398 lb/lb-mole

Density of gas referred to air = $\frac{29.398}{28.95}$ = 1.015

Gas density correction factor = $\sqrt{\frac{1.00}{1.015}} = \sqrt{.9848} = .99$

CH2M HILL

MONTGOMERY OFFICE

807 SOUTH McDONOUGH STREET
MONTGOMERY, ALABAMA 36104
205/834-2870

Client Lehigh

Date 9/17 Run# 1

Sampling Location Main

CALCULATION OF ISOKINETIC RATE

$$I = \frac{T_s \left(1.667 \frac{min}{sec}\right) \left[\left(0.00267 \frac{in.\ Hg\text{-}cu.ft.}{ml - {}^\circ R}\right) V_l + \frac{V_m}{T_m}\left(P_{bar} + \frac{\Delta H}{13.6}\right)\right]}{\theta V_s P_s A_n}$$

Where I = % of isokinetic sampling T_s = Avg. stack temperature = 660 °R

V_l = Total volume of liquid collected in impingers & silica gel = 156.5 ml

V_m = Gas sample thru dry gas meter @ meter conditions = 56.056 cu.ft.

T_m = Average dry gas meter temperature = 546 °R

P_{bar} = Barometric pressure @ sampling site = 29.98 in.Hg

ΔH = Average pressure drop across orifice = 2.364 in.H_2O

θ = Total sampling time = 64 min.

V_s = Stack gas velocity = 55.692 fps

P_s = Stack gas pressure = 29.936 in.Hg

A_n = Cross-sectional area of nozzle = .000363 sq.ft.

$$I = \frac{(660)(1.667)\left[(0.00267)(156.5) + \frac{56.056}{546}\left(29.98 + \frac{2.364}{13.6}\right)\right]}{(64)(55.692)(29.936)(.000363)}$$

$$I = \frac{(1100.22)\left[(.4179) + (.1027)(30.1538)\right]}{(\quad)(\quad)}$$

$$I = \frac{(1100.22)(.4179 + 3.0958)}{(\quad)(\quad)} = \frac{(1100.22)(3.5137)}{(\quad)(\quad)} = 3865.8322$$

I = 99.809 = 99.8 % of isokinetic sampling

MONTGOMERY OFFICE

807 SOUTH McDONOUGH STREET
MONTGOMERY, ALABAMA 36104
205/834-2870 *A DIVISION OF CH2M HILL*

CH2M HILL

PLANT Lehigh
DATE 9/20 RUN NUMBER 6
TIME START 0804 TIME END 0924
MATERIAL PROCESSING RATE LOESCHE MILL ON
SAMPLING LOCATION MAIN
WEATHER HAZY
AMBIENT TEMP. 58 °F STACK PRESS. -0.62" H_2O "Hg
BAROMETRIC PRESS. 29.98 "Hg WET BULB °F
DRY BULB °F MOISTURE %
DEW POINT °F

TEST CONDUCTED BY: Martin / Cooper

NOZZLE DIA. .258 in. FILTER NUMBER
PITOT CORR. FACTOR .85 SILICA GEL NUMBER
ORIFICE CORR. FACTOR 1.855

READING	GAS METER	IMPINGER COND.
FINAL	774.920	360
INITIAL	718.050	200
NET	56.870 − 2.412 = 54.458	160

ORSAT READING

% CO_2	15.5	16.0	16.5
% O_2	9.5	11.5	11.0
% CO			
% N_2			

SKETCH:

SEE PREVIOUS RUNS

pump off from @ ON 732.026 − 729.614 = 2.412

Subtract →

FINAL LEAK CHECK
SAMPLE TRAIN AT 10 in.Hg
FINAL .080
INITIAL .065
LEAK .015 /min.
PITOT
IMPACT 0 at 3.8 in.
STATIC 0 at 5.4 in.

STACK INFORMATION
DIA. in.
AREA ft²
DISTANCE FROM DISTURBANCE: DOWNSTREAM ft.
UPSTREAM ft.

REMARKS: T_s = 200, T_m = 70, %H_2O = 15
c = 0.85, ΔP = 0.60
Silica gel = 17.0 g

PORT # / POINT #	DISTANCE FROM PORT (in.)	TIME	GAS METER VOLUME (ft^3)	STACK VELOCITY HEAD-Δp (in. H_2O)	$\sqrt{\Delta p}$	ORIFICE VELOCITY HEAD-Δp (in. H_2O)	GAS METER TEMP. T_m (°F) INLET	GAS METER TEMP. T_m (°F) OUTLET	STACK TEMP.-T_s (°F)	IMPINGER TEMP. (°F)	BOX TEMP. (°C)	VACUUM (in. Hg)
3/1	0804	0	—	0.76	.872	2.30	58		200	55	125	—
2	4	4	720.6	0.95	.975	2.80	60		200	60	125	2.0
3	12	8	723.2	1.00	1.000	3.00	62		200	60	125	2.0
4	16	12	726.2	0.95	.975	2.80	63		200	60	125	2.0
											°C↓	
4/1	831 ~~820~~	0	~~720.6~~ 68	0.63	.794	1.90	64		200	55	125	2.5
2	off pump shock	4	729.614 / 732.026	0.76	.872	2.40	65		200	55	125	3.0
3	39	8	735.4 / 738.2	0.83	.911	2.50	67		195	55	125	3.0
4	43	12	741.9	0.85	.922	2.60	69		195	55	125	3.5

9/20 Run-6

PORT # / POINT #	DISTANCE FROM PORT (in.)	TIME	GAS METER VOLUME (ft^3)	STACK VELOCITY HEAD- p (in. H_2O)	$\sqrt{\Delta p}$	ORIFICE VELOCITY HEAD- H (in. H_2O)	GAS METER TEMP. T_m (°F) INLET	GAS METER TEMP. T_m (°F) OUTLET	STACK TEMP.-T_s (°F)	INPINGER TEMP. (°F)	BOX TEMP. °C	VACUUM (in. Hg)
1 / 1	0850	0	745.7	0.70	.837	2.10	68		195	55	125	3.0
2	4	4	748.7	0.85	.922	2.55	70		200	55	125	3.0
3	8	8	752.3	0.90	.949	2.70	71		200	55	125	3.0
4	0902	12	756.0	0.93	.964	2.75	73		200	55	125	3.5
	0906										°C↓	
2 / 1	0908	0	759.9	0.85	.922	2.55	73		200	55	125	3.5
2	12	4	763.2	~~0.9~~ 1.00	1.00	3.00	75		200	55	125	3.5
3	16	8	767.1	1.00	1.00	3.00	77		200	55	125	4.0
4	20	12	771.0	1.05	1.025	3.15	78		200	55	125	4.0
	0924				14.94	42.10	1093		3185			
					0.9338	2.6313	68.3125		199.0625			
							528.3125		659.0625			

pump from beginning of port 1 / subtract out 2.412 ft^3 from total sample down

PARTICULATE EMISSION DATA CALCULATION SHEET

CH2M HILL

MONTGOMERY OFFICE

807 SOUTH McDONOUGH STREET
MONTGOMERY, ALABAMA 36104
205/834-2870

Plant LEHIGH

Date 9/20/84 Run # 6

Sampling Location MAW; LOESCHE MILL ON

Sampling Data

$\bar{T}_s$ = 659 °R; $\bar{T}_m$ = 528 °R

C_p = 0.85; $(\overline{\sqrt{\Delta p}})_{avg}$ = 0.93

P_s = 29.934 in.Hg; M_s = 29.38 g/g-mole

A_s = 57.863 sq.ft.; V_m = 54.458 cu.ft.

H_2O (condensate) = 160 mls

H_2O (silica gel) = 17.0 grams

ΔH_{avg} = 2.63 in H_2O; P_b = 29.98 in Hg

Total particulate = 0.0420 grams

1. Calculate Stack gas velocity--

$$V_s = 85.49\ C_p\ (\sqrt{\Delta p})avg \sqrt{\frac{T_s}{P_s M_s}}$$

$$V_s = 85.49\ (0.85)(0.93)\sqrt{\frac{659}{29.934(29.38)}}$$

V_s = 58.50 fps

2. Calculate volume of water vapor in gas sample--

$$V_{wstd} = (0.0474)\left(\begin{matrix}\text{mls } H_2O \\ \text{condensate}\end{matrix} + \begin{matrix}\text{grams } H_2O \\ \text{silica gel}\end{matrix}\right)$$

$$V_{wstd} = (0.0474)(160 + 17) = (0.0474)(177) = 8.39 \text{ cu.ft.}$$

3. Calculate gas sample volume at standard conditions--

$$V_{mstd} = (17.64)(V_m)\left(\frac{P_b + \frac{\Delta H}{13.6}}{T_m}\right)$$

$$V_{mstd} = (17.64)(54.458)\left(\frac{29.98 + \frac{2.63}{13.6}}{528}\right) = (____)(0.0571) = 54.90 \text{ cu.ft.}$$

4. Calculate percent moisture in gas stream--

$$B_{ws} = \frac{V_{wstd}}{V_{mstd} + V_{wstd}} = \frac{8.39}{54.90 + 8.39} = 0.133 = 13.3\%$$

5. Calculate stack gas volumetric flow rate, dry basis, std. conditions--

$$Q_{stpd} = 3600(1-B_{ws})V_s A_s \frac{528}{T_s} \frac{P_s}{29.92}$$

$$Q_{stpd} = 3600\ (1-.133)(58.50)(57.863)(528/659)(29.934/29.92) = 8468960 \text{ cu.ft.}$$

6. Calculate grain loading--

$$\text{grains/sdcf} = (15.43)(\text{grams})/V_{mstd} = (15.43)(0.0420)/(54.90) = 0.012$$

7. Calculate mass emission rate--

$$\text{lbs/hr} = (\text{grains/stdcf})(Q_{stpd})(1.43 \times 10^{-4})$$

$$\text{lbs/hr} = (8468960)(0.0118)(1.43 \times 10^{-4}) = 14.30$$

CH2M HILL

MONTGOMERY OFFICE

607 SOUTH McDONOUGH STREET
MONTGOMERY, ALABAMA 36104
205/834-2670

Client LEHIGH

Date 9/20/84 Run # 6

Sampling Location MAIN; LOESCHE MILL ON

CALCULATION OF STACK GAS MOLECULAR WEIGHT (M_s)

Average Orsat Analysis (dry)

Moisture Content = 13.3 %

$\%CO_2$ = 16.0

$\% O_2$ = 10.7

$\%CO$ = —

$\% N_2$ = 73.3

Component	% Vol/100	X	Moisture Correction	X	Molecular Weight	=	Wt./Mole (wet base)
H_2O	.133	x	1.0	x	18.0	=	2.39
CO_2	.16	x	.867	x	44.0	=	6.10
O_2	.107	x	.867	x	32.0	=	2.97
CO	—	x	—	x	28.0	=	—
N_2	.733	x	.867	x	28.2	=	17.92

Average Molecular Wt., wet basis (M_s) = 29.38 lb/lb-mol

Density of gas referred to air = $\frac{29.38}{28.95}$ = 1.01

Gas density correction factor = $\sqrt{\frac{1.00}{1.01}}$ = $\sqrt{0.985}$ = 0.99

CH2M HILL

MONTGOMERY OFFICE

807 SOUTH McDONOUGH STREET
MONTGOMERY, ALABAMA 36104
205/834-2870

Client LEHIGH

Date 9/20/84 Run# 6

Sampling Location MAIN; LOESCHE MILL ON

CALCULATION OF ISOKINETIC RATE

$$I = \frac{T_s \left(1.667 \frac{min}{sec}\right) \left[\left(0.00267 \frac{in.\ Hg\text{-}cu.ft.}{ml - {}^\circ R}\right) V_l + \frac{V_m}{T_m}\left(P_{bar} + \frac{\Delta H}{13.6}\right)\right]}{\theta V_s P_s A_n}$$

Where I = % of isokinetic sampling T_s = Avg. stack temperature = 659 °R

V_l = Total volume of liquid collected in impingers & silica gel = 177 ml

V_m = Gas sample thru dry gas meter @ meter conditions = 54.458 cu.ft.

T_m = Average dry gas meter temperature = 528 °R

P_{bar} = Barometric pressure @ sampling site = 29.98 in.Hg

ΔH = Average pressure drop across orifice = 2.63 in.H_2O

θ = Total sampling time = 64 min.

V_s = Stack gas velocity = 58.50 fps

P_s = Stack gas pressure = 29.934 in.Hg

A_n = Cross-sectional area of nozzle = 0.000363 sq.ft.

$$I = \frac{(659)(1.667)\left[(0.00267)(177) + \frac{54.458}{528}\left(29.98 + \frac{2.63}{13.6}\right)\right]}{(64)(58.50)(29.934)(0.000363)}$$

$$I = \frac{(\quad)\left[(\quad) + (\quad)(\quad)\right]}{(\quad)}$$

$$I = \frac{(\quad)[0.4726 + 3.1121]}{(\quad)} = \frac{(\quad)[\quad]}{(\quad)} = ____$$

I = ____ = 96.80 % of isokinetic sampling

MONTGOMERY OFFICE
807 SOUTH McDONOUGH STREET
MONTGOMERY, ALABAMA 36104
205/834-2870 A DIVISION OF CH2M HILL
CH2M HILL

PLANT Lehigh Plant
DATE 9/20/84 RUN NUMBER 7
TIME START 1024 TIME END 1133
MATERIAL PROCESSING RATE LOESCHE MILL ON
SAMPLING LOCATION MAIN
WEATHER SUNNY
AMBIENT TEMP. 72 °F STACK PRESS. −0.62" H_2O
BAROMETRIC PRESS. 29.98"Hg WET BULB °F
DRY BULB °F MOISTURE %
DEW POINT °F

TEST CONDUCTED BY: Martin / Cooper

NOZZLE DIA. .258 in. FILTER NUMBER
PITOT CORR. FACTOR .85 SILICA GEL NUMBER
ORIFICE CORR. FACTOR 1.855

READING	GAS METER	IMPINGER COND.
FINAL	834.867	375
INITIAL	777.582	200
NET	57.285	175

ORSAT READING
% CO_2
% O_2 SEE RUN 6
% CO
% N_2

SKETCH: SEE PREVIOUS RUNS
Silica gel = 13.5g

FINAL LEAK CHECK
SAMPLE TRAIN AT 10 in.Hg
FINAL .032
INITIAL .015
LEAK .017 /min.
PITOT
IMPACT 0 at 3.2 in.
STATIC 0 at 4.4 in.

STACK INFORMATION
DIA. in.
AREA ft^2
DISTANCE FROM DISTURBANCE: DOWNSTREAM ft. UPSTREAM ft.

REMARKS: T_s = 200, %H_2O = 15, T_m = 80, C = 0.86, ΔP = 0.61

PORT # / POINT #	DISTANCE FROM PORT (in.)	TIME	GAS METER VOLUME (ft^3)	STACK VELOCITY HEAD-Δp (in. H_2O)	$\sqrt{\Delta p}$	ORIFICE VELOCITY HEAD-Δp (in. H_2O)	GAS METER TEMP. T_m (°F) INLET	GAS METER TEMP. T_m (°F) OUTLET	STACK TEMP.-T_s (°F)	IMPINGER TEMP. (°F)	BOX TEMP. °C	VACUUM (in. Hg)
2/1	1024	0	—	0.83	.911	2.50	74		200	55	125	3.0
2	28	4	780.8	0.95	.975	2.80	75		200	60	125	3.0
3	32	8	784.6	1.00	1.00	2.95	78		200	60	125	3.5
4	36	12	788.5	0.98	.990	2.90	80		200	60	125	3.5
	1040											
1/1	1042	0	792.1	0.65	.806	1.95	80		200	60	125	2.5
2	46	4	796.0	0.83	.911	2.50	83		200	65	125	3.0
3	50	8	799.2	0.85	.922	2.55	84		200	65	125	3.0
4	54	12	802.7	0.90	.949	2.65	85		200	65	125	3.0

9/20/84 - Run 7 - LeRuyb

PORT # / POINT #	DISTANCE FROM PORT (in.)	TIME	GAS METER VOLUME (ft^3)	STACK VELOCITY HEAD- p (in. H_2O)	$\sqrt{\Delta p}$	ORIFICE VELOCITY HEAD- H (in. H_2O)	GAS METER TEMP. T_m (°F) INLET	GAS METER TEMP. T_m (°F) OUTLET	STACK TEMP.-T_s (°F)	IMPINGER TEMP. (°F)	BOX TEMP. ~~(°F)~~ °C	VACUUM (in. Hg)
4/1	1100	0	805.9	0.65	.806	1.95	8	6	200	60	125	2.5
2	04	4	809.1	0.80	.894	2.40	8	6	200	60	125	3.0
3	08	8	812.7	0.85	922	2.55	8	7	200	60	125	3.0
4	12	12	816.2	0.85	.922	2.55	8	8	200	60	125	3.0
	1116										°C	
3/1	1117:30	0	819.9	0.80	.894	2.40	8	8	200	65	125	3.0
2	21:30	4	823.2	0.95	.975	2.85	8	9	200	65	125	3.5
3	25:30	8	827.0	1.00	1.000	2.95	9	0	200	65	125	4.0
4	29:30	12	830.8	0.98	.990	2.90	9	0	200	65	125	4.0
	1133:30				14.8670	41.35	134	3.00				
	OFF				0.9292	2.5844	83	.9375	200			
							543	.9375	660			

PARTICULATE EMISSION DATA CALCULATION SHEET

CH2M HILL
MONTGOMERY OFFICE
807 SOUTH McDONOUGH STREET
MONTGOMERY, ALABAMA 36104
205/834-2870

Plant LEHIGH
Date 9/20/84 Run # 7
Sampling Location MAIN, LOESCHE MILL ON

Sampling Data
$\bar{T}_s$ = 660 °R; $\bar{T}_m$ = 544 °R
C_p = 0.86; $(\sqrt{\Delta p})_{avg}$ = 0.929
P_s = 29.934 in.Hg; M_s = 29.34 g/g-mole
A_s = 57.863 sq.ft.; V_m = 57.285 cu.ft.
H_2O (condensate) = 175 mls
H_2O (silica gel) = 13.5 grams
ΔH_{avg} = 2.58 in H_2O; P_b = 29.98 in Hg
Total particulate = 0.0392 grams

1. Calculate Stack gas velocity--

$$V_s = 85.49\ C_p\ (\sqrt{\Delta p})_{avg} \sqrt{\frac{T_s}{P_s M_s}}$$

$$V_s = 85.49\ (0.86)(0.929)\sqrt{\frac{660}{29.934(29.34)}}$$

V_s = 59.21 fps

2. Calculate volume of water vapor in gas sample--

$$V_{wstd} = (0.0474)\left(\text{mls } H_2O \text{ condensate} + \text{grams } H_2O \text{ silica gel}\right)$$

$$V_{wstd} = (0.0474)(175 + 13.5) = (0.0474)(188.5) = 8.93 \text{ cu.ft.}$$

3. Calculate gas sample volume at standard conditions--

$$V_{mstd} = (17.64)(V_m)\left(\frac{P_b + \frac{\Delta H}{13.6}}{T_m}\right)$$

$$V_{mstd} = (17.64)(57.285)\left(\frac{29.98 + \frac{2.58}{13.6}}{544}\right) = (___)(0.0555) = 56.04 \text{ cu.ft.}$$

4. Calculate percent moisture in gas stream--

$$B_{ws} = \frac{V_{wstd}}{V_{mstd} + V_{wstd}} = \frac{8.93}{56.04 + 8.93} = 0.137 = 13.7\%$$

5. Calculate stack gas volumetric flow rate, dry basis, std. conditions--

$$Q_{stpd} = 3600(1-B_{ws})V_s A_s \frac{528}{T_s} \frac{P_s}{29.92}$$

$$Q_{stpd} = 3600\ (1-.137)(59.21)(57.863)(528/660)(29.934/29.92) = 8519271 \text{ cu.ft.}$$

6. Calculate grain loading--

grains/sdcf = (15.43)(grams)/V_{mstd} = (15.43)(0.0392)/(56.04) = 0.01

7. Calculate mass emission rate--

lbs/hr = (grains/stdcf)(Q_{stpd})(1.43×10^{-4})

lbs/hr = (8519271)(0.0108)(1.43×10^{-4}) = 13.15

CH2M HILL

MONTGOMERY OFFICE

607 SOUTH McDONOUGH STREET
MONTGOMERY, ALABAMA 36104
205/834-2870

Client LEHIGH

Date 9/20/84 Run # 7

Sampling Location MAIN; LOESCHE MILL ON

CALCULATION OF STACK GAS MOLECULAR WEIGHT (M_s)

Average Orsat Analysis (dry)

Moisture Content = 13.7 %

$\%CO_2$ = 16.0

$\% O_2$ = 10.7

$\%CO$ = —

$\% N_2$ = 73.3

Component	% Vol/100	X	Moisture Correction	X	Molecular Weight	=	Wt./Mole (wet base)
H_2O	.137	x	1.0	x	18.0	=	2.47
CO_2	.16	x	.863	x	44.0	=	6.08
O_2	.107	x	.863	x	32.0	=	2.95
CO	—	x	—	x	28.0	=	—
N_2	.733	x	.863	x	28.2	=	17.84

Average Molecular Wt., wet basis (M_s) = 29.34 lb/lb-mol

Density of gas referred to air = $\frac{29.34}{28.95}$ = 1.01

Gas density correction factor = $\sqrt{\frac{1.00}{1.01}}$ = $\sqrt{0.937}$ = 0.97

CH2M HILL

MONTGOMERY OFFICE

807 SOUTH McDONOUGH STREET
MONTGOMERY, ALABAMA 36104
205/834-2870

Client LEHIGH

Date 9/20/84 Run# 7

Sampling Location MAIN; LOESCHE MILL ON

CALCULATION OF ISOKINETIC RATE

$$I = \frac{T_s\left(1.667\ \frac{min}{sec}\right)\left[\left(0.00267\ \frac{in.\ Hg\text{-}cu.ft.}{ml - {}^\circ R}\right) V_l + \frac{V_m}{T_m}\left(P_{bar} + \frac{\Delta H}{13.6}\right)\right]}{\theta V_s P_s A_n}$$

Where I = % of isokinetic sampling T_s = Avg. stack temperature = 660 °R

V_l = Total volume of liquid collected in impingers & silica gel = 188.5 ml

V_m = Gas sample thru dry gas meter @ meter conditions = 57.285 cu.ft.

T_m = Average dry gas meter temperature = 544 °R

P_{bar} = Barometric pressure @ sampling site = 29.98 in.Hg

ΔH = Average pressure drop across orifice = 2.58 in.H_2O

θ = Total sampling time = 64 min.

V_s = Stack gas velocity = 59.21 fps

P_s = Stack gas pressure = 29.934 in.Hg

A_n = Cross-sectional area of nozzle = 0.000363 sq.ft.

$$I = \frac{(660)(1.667)\left[(0.00267)(188.5) + \frac{57.285}{544}\left(29.98 + \frac{2.58}{13.6}\right)\right]}{(64)(59.21)(29.934)(0.000363)}$$

$$I = \frac{(\quad)\left[(\quad) + (\quad)(\quad)\right]}{(\quad)}$$

$$I = \frac{(\quad)(0.5033 + 3.1770)}{(\quad)} = \frac{(\quad)(\quad)}{(\quad)} = ____$$

I = ____ = 93.34 % of isokinetic sampling

LOESCHE MILL "OFF"

RUNS 2, 3, 4, 5

MONTGOMERY OFFICE
807 SOUTH McDONOUGH STREET
MONTGOMERY, ALABAMA 36104
205/834-2870 A DIVISION OF CH2M HILL
CH2M HILL

Vmth JCOH 9/18/84

PLANT Lehigh
DATE 9/18/84 RUN NUMBER 2
TIME START 0742 TIME END 0853
MATERIAL PROCESSING RATE LOADING MILL OFF
SAMPLING LOCATION MAIN
WEATHER P/C
AMBIENT TEMP. 64 °F STACK PRESS. − 0.6 "H_2O (29.895 "Hg)
BAROMETRIC PRESS. 29.94 "Hg WET BULB ___ °F
DRY BULB ___ °F MOISTURE Assume ≤15% from previous work
DEW POINT ___ °F

TEST CONDUCTED BY: Martin / Cooper

NOZZLE DIA. .250 in. FILTER NUMBER ___
PITOT CORR. FACTOR .85 SILICA GEL NUMBER ___
ORIFICE CORR. FACTOR 1.855

READING	GAS METER	IMPINGER COND.
FINAL	569.968	325
INITIAL	525.797	200
NET	44.171	125

ORSAT READING

% CO_2	13.0	13.0	
% O_2	8.0	8.0	
% CO			
% N_2			

SKETCH:

Nozzle: See run #1

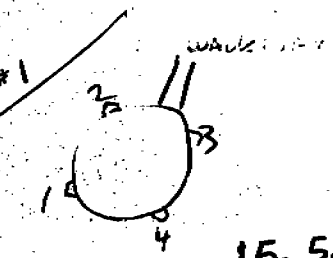

Silica gel = 15.5g

FINAL LEAK CHECK
SAMPLE TRAIN AT 8 in.Hg
FINAL .098
INITIAL .095
LEAK .003 / ~~min.~~ 30 sec
PITOT .006 min
IMPACT 0 at 3 in.
STATIC 0 at 3 in.

STACK INFORMATION
DIA. ___ in.
AREA ___ ft^2
DISTANCE FROM DISTURBANCE: DOWNSTREAM ___ ft. UPSTREAM ___ ft.

REMARKS: T_m = 70, T_s = 270, % H_2O = 15, c = 0.82, Δp = 0.66

PORT # / POINT #	DISTANCE FROM PORT (in.)	TIME	GAS METER VOLUME (ft^3)	STACK VELOCITY HEAD-Δp (in. H_2O)	$\sqrt{\Delta p}$	ORIFICE VELOCITY HEAD-Δp (in. H_2O)	GAS METER TEMP. T_m (°F) INLET	GAS METER TEMP. T_m (°F) OUTLET	STACK TEMP.-T_s (°F)	IMPINGER TEMP. (°F)	BOX TEMP. °C	VACUUM (in. Hg)
3/1	7:42	0	/	0.58	.762	1.55	63		270	60	130	—
2	46	4	528.3	0.58	.762	1.55	64		270	60	135	—
3	50	8	531.1	0.62	.787	1.68	65		270	60	140	1.5
4	54	12	533.9	0.62	.787	1.68	66		270	60	140	2.0
	7:58											
4/1	8:00	0	536.9	0.42	.648	1.18	67		270	60	140	1.5
2	04	4	540.0	0.50	.707	1.35	67		270	60	140	1.5
3	08	8	542.4	0.58	.762	1.58	67		265	60	140.	1.5
4	12	12	544.7	0.58	.762	1.58	68		265	60	140	1.5

KUN-2 - LOESCHE MILL OFF

PORT # / POINT #	DISTANCE FROM PORT (in.)	TIME	GAS METER VOLUME (ft^3)	STACK VELOCITY HEAD- p (in. H_2O)	$\sqrt{\Delta p}$	ORIFICE VELOCITY HEAD- H (in. H_2O)	GAS METER TEMP. T_m (°F) INLET	GAS METER TEMP. T_m (°F) OUTLET	STACK TEMP.-T_s (°F)	IMPINGER TEMP. (°F)	BOX TEMP. °C	VACUUM (in. Hg)
1/1	8.9	0	547.4	0.53	.728	1.44		69	265	60	140	2.0
2	23	4	550.3	0.60	.775	1.62		69	265	60	130	2.0
3	27	8	553.0	0.60	.775	1.62		70	265	60	130	2.0
4	31	12	555.6	0.62	.787	1.68		71	265	60	130	2.0
2/1	37	0	558.5	0.57	.755	1.55		71	265	60	130	2.0
2	41	4	562.0	0.54	.735	1.48		71	265	60	135	2.0
3	45	8	564.1	0.65	.806	1.80		73	265	60	135	2.0
4	49	12	567.0	0.63	.794	1.70		73	265	60	135	2.0
					12.1320	25.0400		1094	4270			
					.7583	1.5650		68.3750	266.3750			
							+460		+460			
								528.3750	726.8750			

PARTICULATE EMISSION DATA CALCULATION SHEET

CH2M HILL

MONTGOMERY OFFICE

807 SOUTH McDONOUGH STREET
MONTGOMERY, ALABAMA 36104
205/834-2870

Plant LEHIGH

Date 9/18/84 Run # 2

Sampling Location MAIN

LOESCHE MILL OFF

Sampling Data

$\bar{T}_s$ = 727 °R; $\bar{T}_m$ = 528 °R

C_p = 0.85; $(\overline{\sqrt{\Delta p}})_{avg}$ = .7583

P_s = 29.896 in. Hg; M_s = 29.83 #/#-mole

A_s = 57.863 sq. ft.; V_m = 44.171 cu. ft.

H_2O (condensate) = 125 mls

H_2O (silica gel) = 15.5 grams

ΔH_{avg} = 1.565 in H_2O; P_b = 29.94 in Hg

Total particulate = 0.0756 grams

1. Calculate Stack gas velocity--

$$V_s = 85.49\ C_p\ (\sqrt{\Delta p})_{avg} \sqrt{\frac{T_s}{P_s M_s}}$$

$$V_s = 85.49\ (0.85)\ (.7583) \sqrt{\frac{727}{29.896(29.83)}}$$

V_s = 449.752 fps

2. Calculate volume of water vapor in gas sample--

$$V_{wstd} = (0.0474) \begin{pmatrix} \text{mls } H_2O \\ \text{condensate} \end{pmatrix} + \begin{pmatrix} \text{grams } H_2O \\ \text{silica gel} \end{pmatrix}$$

$$V_{wstd} = (0.0474)(125 + 15.5) = (0.0474)\ (140.5) = 6.66 \text{ cu.ft.}$$

3. Calculate gas sample volume at standard conditions--

$$V_{mstd} = (17.64)(V_m) \left(\frac{P_b + \frac{\Delta H}{13.6}}{T_m} \right)$$

$$V_{mstd} = (17.64)(44.171) \left(\frac{29.94 + \frac{1.565}{13.6}}{528} \right) = (____)(0.0569) = 44.35 \text{ cu.ft.}$$

4. Calculate percent moisture in gas stream--

$$B_{ws} = \frac{V_{wstd}}{V_{mstd} + V_{wstd}} = \frac{6.66}{44.35 + 6.66} = 0.1307 = 13\%$$

5. Calculate stack gas volumetric flow rate, dry basis, std. conditions--

$$Q_{stpd} = 3600(1-B_{ws})V_s A_s \frac{528}{T_s} \frac{P_s}{29.92}$$

$$Q_{stpd} = 3600\ (1-.13)(49.79)(57.863)(528/727)(29.896/29.92) = 6543110 \text{ cu.ft.}$$

6. Calculate grain loading--

grains/sdcf = (15.43)(grams)/V_{mstd} = (15.43)(0.0756)/(44.35) = 0.0263

7. Calculate mass emission rate--

lbs/hr = (grains/stdcf)(Q_{stpd})(1.43×10^{-4})

lbs/hr = (6543110)(0.0263)(1.43×10^{-4}) = 24.61

CH2M HILL

MONTGOMERY OFFICE

807 SOUTH McDONOUGH STREET
MONTGOMERY, ALABAMA 36104
205/834-2870

Client LEHIGH

Date 9/18/84 Run # 2

Sampling Location MAIN, LOESCHE MILL OFF

CALCULATION OF STACK GAS MOLECULAR WEIGHT (M_s)

Average Orsat Analysis (dry)

Moisture Content = 13 %

$\%CO_2$ = 19

$\% O_2$ = 10.5

$\%CO$ = —

$\% N_2$ = 70.5

FROM RUN #5

Component	% Vol/100	X	Moisture Correction	X	Molecular Weight	=	Wt./Mole (wet base)	
H_2O	13/100	x	1.0	x	18.0	=	2.34	
CO_2	.19	x	.87	x	44.0	=	7.27	7.20
O_2	.105	x	.87	x	32.0	=	2.92	
CO	—	x	—	x	28.0	=	—	
N_2	.705	x	.87	x	28.2	=	17.30	.35

Average Molecular Wt., wet basis (M_s) = 29.83 lb/lb-mol

Density of gas referred to air = $\frac{29.83}{28.95}$ = 1.03

Gas density correction factor = $\sqrt{\frac{1.00}{1.03}}$ = $\sqrt{0.97}$ = 0.985

MONTGOMERY OFFICE

807 SOUTH McDONOUGH STREET
MONTGOMERY, ALABAMA 36104
205/834-2870

Client LEHIGH

Date 9/18/84 Run# 2

Sampling Location MAIN; LOESCHE MILL OFF

CALCULATION OF ISOKINETIC RATE

$$I = \frac{T_s \left(1.667 \frac{min}{sec}\right) \left[\left(0.00267 \frac{in.\ Hg\text{-}cu.ft.}{ml - {}^\circ R}\right) V_l + \frac{V_m}{T_m}\left(P_{bar} + \frac{\Delta H}{13.6}\right)\right]}{\theta V_s P_s A_n}$$

Where I = % of isokinetic sampling T_s = Avg. stack temperature = 727 °R

V_l = Total volume of liquid collected in impingers & silica gel = 140.5 ml

V_m = Gas sample thru dry gas meter @ meter conditions = 44.171 cu.ft.

T_m = Average dry gas meter temperature = 528 °R

P_{bar} = Barometric pressure @ sampling site = 29.94 in.Hg

ΔH = Average pressure drop across orifice = 1.565 in.H_2O

θ = Total sampling time = 64 min.

V_s = Stack gas velocity = 49.752 fps

P_s = Stack gas pressure = 29.896 in.Hg

A_n = Cross-sectional area of nozzle = 0.000363 sq.ft.

$$I = \frac{(727)(1.667)\left[(0.00267)(140.5) + \frac{44.171}{528}\left(29.94 + \frac{1.565}{13.6}\right)\right]}{(64)(49.752)(29.896)(.000363)}$$

$$I = \frac{(1211.90)\left[(0.3751) + (0.0837)(30.0551)\right]}{(\quad)}$$

$$I = \frac{(1211.90)(0.3751 + 2.5143)}{(33.34)} = \frac{(\quad)(\quad)}{(\quad)} = ____$$

I= ____ = 101.3 % of isokinetic sampling

MONTGOMERY OFFICE
807 SOUTH McDONOUGH STREET
MONTGOMERY, ALABAMA 36104
205/834-2870 A DIVISION OF CH2M HILL
CH2M HILL

Visit JCOH 9/18/84

PLANT Lehigh
DATE 9/18/84 RUN NUMBER 3
TIME START 1012 TIME END 1122
MATERIAL PROCESSING RATE LOESCHE MILL OFF
SAMPLING LOCATION MAIN
WEATHER P/C
AMBIENT TEMP. 70 °F STACK PRESS. -.6 "H_2O (29.896) "Hg
BAROMETRIC PRESS. 29.94 "Hg WET BULB °F
DRY BULB °F MOISTURE %
DEW POINT °F

TEST CONDUCTED BY: Martin/Cooper

NOZZLE DIA. .258 in.
PITOT CORR. FACTOR .85
ORIFICE CORR. FACTOR 1.855
FILTER NUMBER
SILICA GEL NUMBER

READING	GAS METER	IMPINGER COND.
FINAL	617.266	318
INITIAL	572.272	200
NET	44.994	118

ORSAT READING

% CO_2		
% O_2	SEE RUN 1	
% CO		
% N_2		

SKETCH:

SEE RUNS 1, 2

Silica gel = 15.0 g

FINAL LEAK CHECK
SAMPLE TRAIN AT 10 in.Hg
FINAL .101
INITIAL .094
LEAK .007 /min. 30 sec
PITOT .014 / MIN
IMPACT 0 at 3.2 in.
STATIC 0 at 3.6 in.

STACK INFORMATION
DIA. in.
AREA ft^2
DISTANCE FROM DISTURBANCE: DOWNSTREAM ft.
UPSTREAM ft.

REMARKS: $T_s = 270$, $T_m = 70$, $\%H_2O = 15$
$c = 0.82$
$\Delta p = 0.66$

PORT # / POINT #	DISTANCE FROM PORT (in.)	TIME	GAS METER VOLUME (ft^3)	STACK VELOCITY HEAD-Δp (in. H_2O)	$\sqrt{\Delta p}$	ORIFICE VELOCITY HEAD-Δp (in. H_2O)	GAS METER TEMP. T_m (°F) INLET	GAS METER TEMP. T_m (°F) OUTLET	STACK TEMP.-T_s (°F)	IMPINGER TEMP. (°F)	BOX TEMP. °C	VACUUM (in. Hg)
2/1	1012	0	—	0.54	0.735	1.49	70		265	60	140	—
2	16	4	574.9	0.60	.775	1.60	70		265	60	140	1.5
3	Peak Velocity 20	8	577.8	0.62	.787	1.70	71		265	60	140	2.0
4	Δp = 0.66 24	12	580.7	0.58	.762	1.65	72		265	60	130	2.0
											°C ↓	
1/1	1036	0	583.6	0.47	.686	1.35	73		265	65	130	2.0
2	36	4	586.2	0.60	.775	1.70	75		265	65	130	2.5
3	36	8	588.9	0.58	.762	1.65	76		270	65	130	2.5
4	42	12	591.9	0.58	.762	1.65	78		270	65	130	2.5

RUN-3- Lehigh - 9/18

PORT # / POINT #	DISTANCE FROM PORT (in.)	TIME	GAS METER VOLUME (ft^3)	STACK VELOCITY HEAD- p (in. H_2O)	$\sqrt{\Delta p}$	ORIFICE VELOCITY HEAD- H (in. H_2O)	GAS METER TEMP. T_m (°F) INLET	GAS METER TEMP. T_m (°F) OUTLET	STACK TEMP.-T_s (°F)	IMPINGER TEMP. (°F)	BOX TEMP. ~~(°F)~~ °C	VACUUM (in. Hg)
4/1	1048	0	594.8	0.42	.648	1.20	7	8	270	65	130	2.0
2	52	4	597.2	0.52	.721	1.50	7	8	270	65	130	2.0
3	56	8	599.9	0.54	.735	1.55	7	9	270	65	135	2.5
4	1100	12	602.6	0.54	.735	1.55	7	8	270	65	135	2.5
3/1	1106	0	605.5	0.52	.721	1.50	7	9	270	65	135	2.5
2	10	4	608.3	0.64	.800	1.80	7	9	270	65	135	2.5
3	14	8	611.3	0.64	.800	1.80	7	9	270	65	135	3.0
4	18	12	614.3	0.64	.800	1.80	7	9	270	65	135	3.0
					12.0040	26.2403	121	4.00	4290			
					0.7503	1.6400	75	8750	268.1250			
							+460		+460			
							535	8750	728.1250			

PARTICULATE EMISSION DATA CALCULATION SHEET

CH2M HILL

MONTGOMERY OFFICE

807 SOUTH McDONOUGH STREET
MONTGOMERY, ALABAMA 36104
205/834-2870

Plant LEHIGH

Date 9/18/84 Run # 3

Sampling Location MAIN, LOESCHE MILL OFF

Sampling Data

$\bar{T}_s$ = 728 °R; $\bar{T}_m$ = 536 °R

C_p = 0.85; $(\sqrt{\Delta p})_{avg}$ = 0.75

P_s = 29.896 in.Hg; M_s = 29.89 #/#-mole

A_s = 57.863 sq.ft.; V_m = 44.994 cu.ft.

H_2O (condensate) = 118 mls

H_2O (silica gel) = 15.0 grs

ΔH_{avg} = 1.64 in H_2O; P_b = 29.94 in Hg

Total particulate = 0.0787 grams

1. Calculate Stack gas velocity--

$$V_s = 85.49\ C_p\ (\sqrt{\Delta p})avg \sqrt{\frac{T_s}{P_s M_s}}$$

$$V_s = 85.49\ (0.85)(0.75)\sqrt{\frac{728}{29.896(29.89)}}$$

V_s = 49.192 fps

2. Calculate volume of water vapor in gas sample--

$$V_{wstd} = (0.0474)\begin{pmatrix}\text{mls } H_2O & \text{grams } H_2O \\ \text{condensate} + & \text{silica gel}\end{pmatrix}$$

$$V_{wstd} = (0.0474)(118 + 15) = (0.0474)(133) = 6.30 \text{ cu.ft.}$$

3. Calculate gas sample volume at standard conditions--

$$V_{mstd} = (17.64)(V_m)\left(\frac{P_b + \frac{\Delta H}{13.6}}{T_m}\right)$$

$$V_{mstd} = (17.64)(44.99)\left(\frac{29.94 + \frac{1.64}{13.6}}{536}\right) = (____)(0.0561) = 44.51 \text{ cu.ft.}$$

4. Calculate percent moisture in gas stream--

$$B_{ws} = \frac{V_{wstd}}{V_{mstd} + V_{wstd}} = \frac{6.30}{44.51 + 6.30} = 0.124 = 12.4\%$$

5. Calculate stack gas volumetric flow rate, dry basis, std. conditions--

$$Q_{stpd} = 3600(1-B_{ws})V_s A_s \frac{528}{T_s} \frac{P_s}{29.92}$$

$$Q_{stpd} = 3600\ (1-.124)(49.192)(57.863)(528/728)(29.896/29.92) = 6,505,131 \text{ cu.ft.}$$

6. Calculate grain loading--

grains/sdcf = (15.43)(grams)/V_{mstd} = (15.43)(0.0787)/(44.51) = 0.0273

7. Calculate mass emission rate--

lbs/hr = (grains/stdcf)(Q_{stpd})(1.43×10^{-4})

lbs/hr = (6,505,131)(0.0273)(1.43×10^{-4}) = 25.40

CH2M HILL

MONTGOMERY OFFICE

807 SOUTH McDONOUGH STREET
MONTGOMERY, ALABAMA 36104
205/834-2670

Client LEHIGH

Date 9/18/84 Run # 3

Sampling Location MAIN, LOESCHE MILL OFF

CALCULATION OF STACK GAS MOLECULAR WEIGHT (M_s)

Average Orsat Analysis (dry)

$\%CO_2$ = 19

$\%O_2$ = 10.5

$\%CO$ = —

$\%N_2$ = 70.5

Moisture Content = 12.4 %

Component	% Vol/100	X	Moisture Correction	X	Molecular Weight	=	Wt./Mole (wet base)
H_2O	.124	x	1.0	x	18.0	=	2.23
CO_2	.19	x	.875	x	44.0	=	7.32
O_2	.105	x	.875	x	32.0	=	2.94
CO	—	x	—	x	28.0	=	—
N_2	.705	x	.875	x	28.2	=	17.40

Average Molecular Wt., wet basis (M_s) = 29.89 lb/lb-mol

Density of gas referred to air = $\frac{29.89}{28.95}$ = 1.03

Gas density correction factor = $\sqrt{\frac{1.00}{1.03}} = \sqrt{0.97} = 0.98$

MONTGOMERY OFFICE

807 SOUTH McDONOUGH STREET
MONTGOMERY, ALABAMA 36104
205/834-2870

Client LEHIGH

Date 9/18/84 Run# 3

Sampling Location MAIN; LOESCHE MILL OFF

CALCULATION OF ISOKINETIC RATE

$$I = \frac{T_s\left(1.667\ \frac{min}{sec}\right)\left[\left(0.00267\ \frac{in.\ Hg\text{-}cu.ft.}{ml\ -\ °R}\right) V_l + \frac{V_m}{T_m}\left(P_{bar} + \frac{\Delta H}{13.6}\right)\right]}{\theta V_s P_s A_n}$$

Where I = % of isokinetic sampling T_s = Avg. stack temperature = 728 °R

V_l = Total volume of liquid collected in impingers & silica gel = 133 ml

V_m = Gas sample thru dry gas meter @ meter conditions = 44.994 cu.ft.

T_m = Average dry gas meter temperature = 536 °R

P_{bar} = Barometric pressure @ sampling site = 29.94 in.Hg

ΔH = Average pressure drop across orifice = 1.64 in.H_2O

θ = Total sampling time = 64 min.

V_s = Stack gas velocity = 49.192 fps

P_s = Stack gas pressure = 29.896 in.Hg

A_n = Cross-sectional area of nozzle = .000363 sq.ft.

$$I = \frac{(728)(1.667)\left[(0.00267)(133) + \frac{44.994}{536}\left(29.94 + \frac{1.64}{13.6}\right)\right]}{(64)(49.192)(29.896)(.000363)}$$

$$I = \frac{(\quad)\left[(\quad) + (\quad)(\quad)\right]}{(\quad)}$$

$$I = \frac{(\quad)(0.3551 + 2.5234)}{(\quad)} = \frac{(\quad)(2.8785)}{(\quad)} = ____$$

I = ____ = 102.2 % of isokinetic sampling

MONTGOMERY OFFICE

807 SOUTH McDONOUGH STREET
MONTGOMERY, ALABAMA 36104
205/834-2870 *A DIVISION OF CH2M HILL*

CH2M HILL

VMH
JCOH
9/18/84

PLANT Lehigh
DATE 9/18/84 RUN NUMBER 4
TIME START 1255 TIME END 1407
MATERIAL PROCESSING RATE
SAMPLING LOCATION LOESCHE MILL OFF
WEATHER SUNNY
AMBIENT TEMP. 78 °F STACK PRESS. ~~-0.6~~ "H_2O 29.89 "Hg
BAROMETRIC PRESS. 29.94 "Hg WET BULB — °F
DRY BULB — °F MOISTURE — %
DEW POINT — °F

TEST CONDUCTED BY: Martin/Cooper

NOZZLE DIA. .258 in. FILTER NUMBER
PITOT CORR. FACTOR .85 SILICA GEL NUMBER
ORIFICE CORR. FACTOR 1.855

READING	GAS METER	IMPINGER COND.
FINAL	664.307	330
INITIAL	620.002	200
NET	44.305	130

ORSAT READING
% CO_2 see run #5
% O_2
% CO
% N_2

SKETCH:

see run #2

Silica gel = 16.5g

DIA. in.
AREA ft^2

STACK INFORMATION
DISTANCE FROM DISTURBANCE: DOWNSTREAM ft.
UPSTREAM ft.

FINAL LEAK CHECK
SAMPLE TRAIN AT 9 in.Hg
FINAL .042
INITIAL .033
LEAK .009 /min 30 sec
PITOT .018 /min
IMPACT 0 at 4 in.
STATIC 0 at 3.9 in.

REMARKS: $T_s = 270$, $T_m = 90$, $\%H_2O = 15\%$, $C = 0.82$, $\Delta p = 0.66$

PORT # / POINT #	DISTANCE FROM PORT (in.)	TIME	GAS METER VOLUME (ft^3)	STACK VELOCITY HEAD-Δp (in. H_2O)	$\sqrt{\Delta p}$	ORIFICE VELOCITY HEAD-Δp (in. H_2O)	GAS METER TEMP. T_m (°F) INLET	GAS METER TEMP. T_m (°F) OUTLET	STACK TEMP.-T_s (°F)	IMPINGER TEMP. (°F)	BOX TEMP. ~~(°F)~~ °C	VACUUM (in. Hg)
3/1	1255	0	—	0.44	.663	1.28	78		270	60	130	—
2	1259	4	622.3	0.55	.742	1.55	78		270	60	130	—
3	1303	8	624.9	0.58	.762	1.65	80		270	60	130	—
4	1307	12	627.9	0.55	.742	1.55	82		270	60	130	—
4/1	1313	0	630.7	0.40	.633	1.15	83		270	60	130	—
2	17	4	632.7	0.51	.714	1.45	83		270	60	130	—
3	21	8	635.9	0.53	.728	1.52	83		270	60	130	—
4	25	12	638.4	0.53	.728	1.52	83		270			—

KUN-4 - 9/18/84 - Lehigh -

PORT # / POINT #	DISTANCE FROM PORT (in.)	TIME	GAS METER VOLUME (ft^3)	STACK VELOCITY HEAD- p (in. H_2O)	$\sqrt{\Delta p}$	ORIFICE VELOCITY HEAD- H (in. H_2O)	GAS METER TEMP. T_m (°F) INLET	GAS METER TEMP. T_m (°F) OUTLET	STACK TEMP.-T_s (°F)	IMPINGER TEMP. (°F)	BOX TEMP. ~~(°F)~~ °C	VACUUM (in. Hg)
1/1	13.32	0	641.3	0.48	.693	1.40	8	5	270	60	130	—
2	36	4	644.0	0.53	.728	1.52	8	7	270	60	130	—
3	40	8	646.7	0.55	.742	1.60	8	7	270	60	130	—
4	44	12	649.6	0.55	.742	1.60	8	9	270	60	130	—
	1348 x										°C↓	
2/1	1351.30	0	652.5	0.53	.728	1.52	8	9	270	65	130	—
2	55.30	4	655.3	0.60	.775	1.70	8	8	270	65	130	—
3	59.30	8	658.1	0.60	.775	1.70	8	9	270	65	130	—
4	1403.30	12	661.1	0.60	.775	1.70	9	1	270	65	130	—
					11.6700	24.3600	135.5					
					0.7294	1.5225	84.6875		270			
							+460		+460			
							544.6875		730			

PARTICULATE EMISSION DATA CALCULATION SHEET

CH2M HILL

MONTGOMERY OFFICE

807 SOUTH McDONOUGH STREET
MONTGOMERY, ALABAMA 36104
205/834-2870

Plant LEHIGH

Date 9/18/84 Run # 4

Sampling Location MAIN; LOESCHE MILL OFF

Sampling Data

$\bar{T}_s$ = 730 °R; $\bar{T}_m$ = 545 °R

C_p = 0.85; $(\overline{\sqrt{\Delta p}})_{avg}$ = 0.73

P_s = 29.896 in.Hg; M_s = 29.37 #/#-mole

A_s = 57.863 sq.ft.; V_m = 44.305 cu.ft.

H_2O (condensate) = 130 mls

H_2O (silica gel) = 16.5 grams

ΔH_{avg} = 1.52 in H_2O; P_b = 29.94 in Hg

Total particulate = 0.0523 grams

1. Calculate Stack gas velocity--

$$V_s = 85.49\ C_p\ (\sqrt{\Delta p})avg \sqrt{\frac{T_s}{P_s M_s}}$$

$$V_s = 85.49\ (0.85)(0.73)\sqrt{\frac{730}{29.896(29.37)}}$$

V_s = 48.368 fps

2. Calculate volume of water vapor in gas sample--

$$V_{wstd} = (0.0474)\begin{pmatrix}\text{mls } H_2O & \text{grams } H_2O \\ \text{condensate} & + \text{ silica gel}\end{pmatrix}$$

$$V_{wstd} = (0.0474)(130 + 16.5) = (0.0474)(146.5) = 6.94 \text{ cu.ft.}$$

3. Calculate gas sample volume at standard conditions--

$$V_{mstd} = (17.64)(V_m)\left(\frac{P_b + \frac{\Delta H}{13.6}}{T_m}\right)$$

$$V_{mstd} = (17.64)(44.305)\left(\frac{29.94 + \frac{1.52}{13.6}}{545}\right) = (____)(0.0551) = 43.09 \text{ cu.ft.}$$

4. Calculate percent moisture in gas stream--

$$B_{ws} = \frac{V_{wstd}}{V_{mstd} + V_{wstd}} = \frac{6.94}{43.09 + 6.94} = 0.139 = 14\%$$

5. Calculate stack gas volumetric flow rate, dry basis, std. conditions--

$$Q_{stpd} = 3600(1-B_{ws})V_s A_s \frac{528}{T_s} \frac{P_s}{29.92}$$

$$Q_{stpd} = 3600\ (1-.14)(48.368)(57.86)(528/730)(29.896/29.92) = 6,261,813 \text{ cu.ft.}$$

6. Calculate grain loading--

grains/sdcf = (15.43)(grams)/V_{mstd} = (15.43)(0.0523)/(43.09) = 0.0187

7. Calculate mass emission rate--

lbs/hr = (grains/stdcf)(Q_{stpd})(1.43 x 10^{-4})

lbs/hr = (6261813)(0.0187)(1.43 x 10^{-4}) = 16.74

CH2M HILL

MONTGOMERY OFFICE

807 SOUTH McDONOUGH STREET
MONTGOMERY, ALABAMA 36104
205/834-2870

Client LEHIGH

Date 9/18/84 Run # 4

Sampling Location MAIN; LOESCHE MILL OFF

CALCULATION OF STACK GAS MOLECULAR WEIGHT (M_s)

Average Orsat Analysis (dry)

$\%CO_2$ = 18.8

$\%O_2$ = 10.5

$\%CO$ = —

$\%N_2$ = 70.7

Moisture Content = 14 %

Component	% Vol/100	X	Moisture Correction	X	Molecular Weight	=	Wt./Mole (wet base)
H_2O	.14	x	1.0	x	18.0	=	2.52
CO_2	.188	x	.86	x	44.0	=	6.81
O_2	.105	x	.86	x	32.0	=	2.89
CO	—	x	—	x	28.0	=	—
N_2	.707	x	.86	x	28.2	=	17.15

Average Molecular Wt., wet basis (M_s) = 29.37 lb/lb-mol

Density of gas referred to air = $\frac{29.37}{28.95}$ = 1.01

Gas density correction factor = $\sqrt{\frac{1.00}{1.01}}$ = $\sqrt{0.986}$ = 0.99

CH2M HILL

MONTGOMERY OFFICE

807 SOUTH McDONOUGH STREET
MONTGOMERY, ALABAMA 36104
205/834-2870

Client LEHIGH

Date 9/18/84 Run# 4

Sampling Location MAIN; LOESCHE MILL OFF

CALCULATION OF ISOKINETIC RATE

$$I = \frac{T_s\left(1.667\ \frac{min}{sec}\right)\left[\left(0.00267\ \frac{in.\ Hg\text{-}cu.ft.}{ml - {}^\circ R}\right) V_l + \frac{V_m}{T_m}\left(P_{bar} + \frac{\Delta H}{13.6}\right)\right]}{\theta V_s P_s A_n}$$

Where I = % of isokinetic sampling T_s = Avg. stack temperature = 730 °R

V_l = Total volume of liquid collected in impingers & silica gel = 146.5 ml

V_m = Gas sample thru dry gas meter @ meter conditions = 44.305 cu.ft.

T_m = Average dry gas meter temperature = 545 °R

P_{bar} = Barometric pressure @ sampling site = 29.94 in.Hg

ΔH = Average pressure drop across orifice = 1.52 in.H_2O

θ = Total sampling time = 64 min.

V_s = Stack gas velocity = 48.368 fps

P_s = Stack gas pressure = 29.896 in.Hg

A_n = Cross-sectional area of nozzle = 0.000363 sq.ft.

$$I = \frac{(730)(1.667)\left[(0.00267)(146.5) + \frac{44.305}{545}\left(29.94 + \frac{1.52}{13.6}\right)\right]}{(64)(48.368)(29.896)(.000363)}$$

$$I = \frac{(\quad)\left[(\quad) + (\quad)(\quad)\right]}{(\quad)}$$

$$I = \frac{(\quad)(0.3912 + 2.4439)}{(\quad)} = \frac{(\quad)(\quad)}{(\quad)} = ____$$

I = ____ = 102.7 % of isokinetic sampling

MONTGOMERY OFFICE
807 SOUTH McDONOUGH STREET
MONTGOMERY, ALABAMA 36104
205/834-2870 A DIVISION OF CH2M HILL
CH2M HILL

V/m# JCOH 9/18/84

PLANT Lehigh
DATE 9/18/84 RUN NUMBER 5
TIME START 1510 TIME END 1621
MATERIAL PROCESSING RATE LOESCHE MILL OFF
SAMPLING LOCATION MAIN
WEATHER
AMBIENT TEMP. 82 °F STACK PRESS. -0.6 "H_2O
BAROMETRIC PRESS. 26.94 "Hg WET BULB °F
DRY BULB °F MOISTURE %
DEW POINT °F

TEST CONDUCTED BY: Martin/Cooper

NOZZLE DIA. 0.258 in.
PITOT CORR. FACTOR 0.85
ORIFICE CORR. FACTOR 1.855
FILTER NUMBER 41
SILICA GEL NUMBER

READING	GAS METER	IMPINGER COND.
FINAL	708.360	330
INITIAL	664.546	200
NET	43.814	130

ORSAT READING

% CO_2	19.0	19.0	19.5
% O_2	10.5	10.5	10.5
% CO			
% N_2			

REMARKS: SEE RUN #4

SKETCH:
SEE RUNS 1, 2

Silica gel = 14.0g

FINAL LEAK CHECK
SAMPLE TRAIN AT 9 in.Hg
FINAL .013
INITIAL .000
LEAK .013 /min.
PITOT
IMPACT 0 at 3.2 in.
STATIC 0 at 3.8 in.

DIA. in.
AREA ft^2

STACK INFORMATION
DISTANCE FROM DISTURBANCE: DOWNSTREAM ft.
UPSTREAM ft.

PORT # / POINT #	DISTANCE FROM PORT (in.)	TIME	GAS METER VOLUME (ft^3)	STACK VELOCITY HEAD-Δp (in. H_2O)	$\sqrt{\Delta p}$	ORIFICE VELOCITY HEAD-Δp (in. H_2O)	GAS METER TEMP. T_m (°F) INLET	GAS METER TEMP. T_m (°F) OUTLET	STACK TEMP.-T_s (°F)	IMPINGER TEMP. (°F)	BOX TEMP. °C	VACUUM (in. Hg)
2/1	1510	0	—	0.50	.707	1.40	83		270	60	125	—
2	14	4	667.0	0.55	.742	1.55	84		270	60	125	—
3	18	8	669.9	0.55	.742	1.55	85		270	60	125	—
4	22	12	672.6	0.53	.728	1.50	87		270	60	125	2.0
											°C	
1/1	1529	0	675.4	0.43	.656	1.25	88		270	60	125	1.5
2	33	4	678.0	0.52	.721	1.47	89		270	60	125	2.0
3	37	8	680.7	0.53	.728	1.50	90		270	60	125	2.0
4	41	12	683.4	0.52	.721	1.47	92		270			2.0

66[redacted]

PORT # / POINT #	DISTANCE FROM PORT (in.)	TIME	GAS METER VOLUME (ft^3)	STACK VELOCITY HEAD- p (in. H_2O)	$\sqrt{\Delta p}$	ORIFICE VELOCITY HEAD- H (in. H_2O)	GAS METER TEMP. T_m (°F) INLET	GAS METER TEMP. T_m (°F) OUTLET	STACK TEMP.-T_s (°F)	IMPINGER TEMP. (°F)	BOX TEMP. ~~(°F)~~ °C	VACUUM (in. Hg)
4 / 1	1547	0	686.3	0.42	.648	1.20	9	4	270	60	125°	1.5
2	51	4	688.9	0.48	.693	1.40	9	4	270	60	125°	2.0
3	55	8	691.3	0.52	.721	1.50	9	4	270	60	125	2.0
4	59	12	694.3	0.52	.721	1.50	9	5	270	60	125	2.0
											°C ↓	
3 / 1	1605	0	697.1	0.48	.693	1.40	9	5	270	60	125	2.0
2	09	4	699.8	0.58	.762	1.65	9	5	270	60	125	2.0
3	13	8	702.5	0.55	.742	1.55	9	5	270	60		2.0
4	17	12	705.3	0.60	.775	1.70	9	6	270	60	125	2.0
	(1621 / 60)				11.4750	23.5900	1456					
					0.7172	1.4744	91.0000		270.00			
							551.00		730.00			

PARTICULATE EMISSION DATA CALCULATION SHEET

CH2M HILL

MONTGOMERY OFFICE

807 SOUTH McDONOUGH STREET
MONTGOMERY, ALABAMA 36104
205/834-2870

Plant LEHIGH

Date 9/18/84 Run # 5

Sampling Location MAIN; LOESCHE MILL OFF

Sampling Data

$\bar{T}_s$ = 730 °R; $\bar{T}_m$ = 551 °R

C_p = 0.85; $(\sqrt{\Delta p})_{avg}$ = 0.717

P_s = 29.896 in.Hg; M_s = 29.67 g/g-mole

A_s = 57.863 sq.ft.; V_m = 43.814 cu.ft.

H_2O (condensate) = 130 mls

H_2O (silica gel) = 14.0 grams

ΔH_{avg} = 1.47 in H_2O; P_b = 29.94 in Hg

Total particulate = 0.0488 grams

1. Calculate Stack gas velocity--

$$V_s = 85.49\ C_p\ (\sqrt{\Delta p})_{avg} \sqrt{\frac{T_s}{P_s M_s}}$$

$$V_s = 85.49\ (0.85)(0.717)\sqrt{\frac{730}{29.896(29.67)}}$$

V_s = 47.266 fps

2. Calculate volume of water vapor in gas sample--

$$V_{wstd} = (0.0474)\begin{pmatrix}\text{mls } H_2O & \text{grams } H_2O \\ \text{condensate} & + \text{ silica gel}\end{pmatrix}$$

$$V_{wstd} = (0.0474)(130 + 14) = (0.0474)(144) = 6.83 \text{ cu.ft.}$$

3. Calculate gas sample volume at standard conditions--

$$V_{mstd} = (17.64)(V_m)\left(\frac{P_b + \frac{\Delta H}{13.6}}{T_m}\right)$$

$$V_{mstd} = (17.64)(43.814)\left(\frac{29.94 + \frac{1.47}{13.6}}{551}\right) = (____)(0.0545) = 42.15 \text{ cu.ft.}$$

4. Calculate percent moisture in gas stream--

$$B_{ws} = \frac{V_{wstd}}{V_{mstd} + V_{wstd}} = \frac{6.83}{42.15 + 6.83} = 0.1395 = 14\%$$

5. Calculate stack gas volumetric flow rate, dry basis, std. conditions--

$$Q_{stpd} = 3600(1-B_{ws})V_s A_s \frac{528}{T_s} \frac{P_s}{29.92}$$

$$Q_{stpd} = 3600\ (1-.14)(47.266)(57.863)(528/730)(29.896/29.92) = 6,119,463 \text{ cu.ft.}$$

6. Calculate grain loading--

grains/sdcf = (15.43)(grams)/V_{mstd} = (15.43)(0.0488)/(42.15) = 0.0179

7. Calculate mass emission rate--

lbs/hr = (grains/stdcf)(Q_{stpd})(1.43×10^{-4})

lbs/hr = (6,119,463)(0.0179)(1.43×10^{-4}) = 15.66

CH2M HILL

MONTGOMERY OFFICE

807 SOUTH McDONOUGH STREET
MONTGOMERY, ALABAMA 36104
205/834-2870

Client LEHIGH

Date 9/18/84 Run # 5

Sampling Location MAIN; LOESCHE MILL OFF

CALCULATION OF STACK GAS MOLECULAR WEIGHT (M_s)

Average Orsat Analysis (dry)

Moisture Content = 14 %

$\%CO_2$ = 18.8

$\% O_2$ = 10.5

$\%CO$ = —

$\% N_2$ = 70.7

Component	% Vol/100	X	Moisture Correction	X	Molecular Weight	=	Wt./Mole (wet base)
H_2O	.140	x	1.0	x	18.0	=	2.52
CO_2	.188	x	.86	x	44.0	=	7.11
O_2	.105	x	.86	x	32.0	=	2.89
CO	—	x	—	x	28.0	=	—
N_2	.707	x	.86	x	28.2	=	17.15

Average Molecular Wt., wet basis (M_s) = 29.67 lb/lb-mol

Density of gas referred to air = $\frac{29.67}{28.95}$ = 1.02

Gas density correction factor = $\sqrt{\frac{1.00}{1.02}} = \sqrt{0.976} = 0.99$

MONTGOMERY OFFICE

807 SOUTH McDONOUGH STREET
MONTGOMERY, ALABAMA 36104
205/834-2870

Client LEHIGH

Date 9/18/84 Run# 5

Sampling Location MAIN; LOESCHE MILL OFF

CALCULATION OF ISOKINETIC RATE

$$I = \frac{T_s\left(1.667\ \frac{min}{sec}\right)\left[\left(0.00267\ \frac{in.\ Hg\text{-}cu.ft.}{ml\ -\ °R}\right) V_l + \frac{V_m}{T_m}\left(P_{bar} + \frac{\Delta H}{13.6}\right)\right]}{\theta V_s P_s A_n}$$

Where I = % of isokinetic sampling T_s = Avg. stack temperature = 730 °R

V_l = Total volume of liquid collected in impingers & silica gel = 144 ml

V_m = Gas sample thru dry gas meter @ meter conditions = 43.814 cu.ft.

T_m = Average dry gas meter temperature = 551 °R

P_{bar} = Barometric pressure @ sampling site = 29.94 in.Hg

ΔH = Average pressure drop across orifice = 1.47 in.H_2O

θ = Total sampling time = 64 min.

V_s = Stack gas velocity = 47.266 fps

P_s = Stack gas pressure = 29.896 in.Hg

A_n = Cross-sectional area of nozzle = 0.000363 sq.ft.

$$I = \frac{(730)(1.667)\left[(0.00267)(144) + \frac{43.814}{551}\left(29.94 + \frac{1.47}{13.6}\right)\right]}{(64)(47.266)(29.896)(0.000363)}$$

$$I = \frac{(\quad)\left[(\quad) + (\quad)(\quad)\right]}{(\quad)}$$

$$I = \frac{(\quad)[0.3945 + 2.3893]}{(\quad)} = \frac{(\quad)[\quad]}{(\quad)} = ____$$

I = ____ = 102.8 % of isokinetic sampling

CLINKER COOLER

RUNS 8, 9, 10

MONTGOMERY OFFICE
807 SOUTH McDONOUGH STREET
MONTGOMERY, ALABAMA 36104
205/834-2870 A DIVISION OF CH2M HILL
CH2M HILL

VMH 9/21/84 VMH JCOH

PLANT Lehigh
DATE 9/21/84 RUN NUMBER 1 (8)
TIME START 0813 TIME END 0924
MATERIAL PROCESSING RATE
SAMPLING LOCATION Clinker Cooler
WEATHER Hazy
AMBIENT TEMP. (HOT) °F STACK PRESS. −0.22" H_2O "Hg
BAROMETRIC PRESS. 29.96 "Hg WET BULB 110 (~6%) °F
DRY BULB 380 °F MOISTURE Assume 4%
DEW POINT °F PREVIOUS DATA

TEST CONDUCTED BY: Martin/Cooper

NOZZLE DIA. .258 in. FILTER NUMBER 45
PITOT CORR. FACTOR .85 SILICA GEL NUMBER
ORIFICE CORR. FACTOR 1.855

READING	GAS METER	IMPINGER COND.
FINAL	882.039	215
INITIAL	854.095	200
NET	27.944	15

ORSAT READING
% CO_2 ___
% O_2 ___
% CO ___
% N_2 ___

SKETCH:

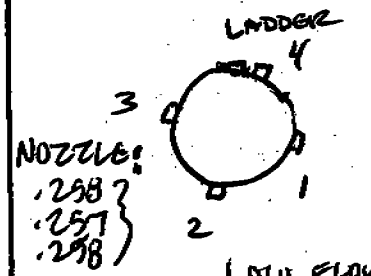

20 pts @ 3 min/ea
5/port

NOZZLE: .258, .257, .258

FINAL LEAK CHECK
SAMPLE TRAIN AT 9 in.Hg
FINAL .052
INITIAL .042
LEAK .010/min.
PITOT
IMPACT 0 at 3.6 in.
STATIC 0 at 3.2 in.

LOW FLOW
DIA. ___ in. Δp = 0.1-0.2
AREA ___ ft^2

STACK INFORMATION
DISTANCE FROM DISTURBANCE: DOWNSTREAM ___ ft. UPSTREAM ___ ft.

REMARKS: T_s = 350, %H_2O = 4, T_m = 110, C = 1.10, Δp = 0.54
Silicagel = 12.0g

PORT # / POINT #	DISTANCE FROM PORT (in.)	TIME	GAS METER VOLUME (ft^3)	STACK VELOCITY HEAD-Δp (in. H_2O)	$\sqrt{\Delta p}$	ORIFICE VELOCITY HEAD-Δp (in. H_2O)	GAS METER TEMP. T_m (°F) INLET	GAS METER TEMP. T_m (°F) OUTLET	STACK TEMP.-T_s (°F)	IMPINGER TEMP. (°F)	BOX TEMP. °C	VACUUM (in. Hg)
1/1	8.19	0	—	0.13	.361	0.46	97		350	60	125	—
2	17	3	855.4	0.15	.387	0.53	97		360	60	125	—
3	20	6	856.7	0.17	.412	0.59	98		365	60	125	—
4	23	9	858.3	0.20	.447	0.70	98		370	60	125	—
5	26	12	859.8	0.20	.447	0.70	98		375	65	125	—
	8.29											
2/1	0833	0	861.1	0.13	.361	0.46	99		355	65	130	—
2	0836	3	862.4	0.12	.346	0.41	103		370	65	130	—
3	0839	6	863.7	0.07	.265	0.25	104		380	65	125	—

RUN 1 - Clinker Cooler 4/29

PORT # / POINT #	DISTANCE FROM PORT (in.)	TIME	GAS METER VOLUME (ft^3)	STACK VELOCITY HEAD- p (in. H_2O)	$\sqrt{\Delta p}$	ORIFICE VELOCITY HEAD- H (in. H_2O)	GAS METER TEMP. T_m (°F) INLET	GAS METER TEMP. T_m (°F) OUTLET	STACK TEMP.-T_s (°F)	IMPINGER TEMP. ~~(°F)~~ °C	BOX TEMP. ~~(°F)~~ °C	VACUUM (in. Hg)
2/4	0842	9	864.8	0.07	.265	0.25	106		335	65	125	—
5	0845	12	865.8	0.11	.332	0.38	108		300	65	125	—
	T_s: 300 Δp: .51											
3/1	0851	0	866.8	0.16	.400	0.58	110		300	65	125	—
2	54	3	867.9	0.16	.400	0.58	111		300	65	125	—
3	57	6	869.1	0.26	.510	0.94	114		300	65	125	—
4	900	9	870.5	0.22	.469	0.80	114		310	ECE 65	125	—
5	903	12	872.2	0.29	.539	1.05	117			60	125	—
	0906											
4/1	909	0	874.0	0.26	.510	0.94	118		330	60	125	—
2	T_s: 12	3	875.8	0.26	.510	0.84	117		370	65	125	—
3	370 Δp: 15	6	877.5	0.23	.480	0.75	116		365	65	125	—
4	0.57 18	9	879.1	0.19	.436	0.63	114		355	65	125	2.0
5	21	12	880.6	0.16	.400	0.53	112		345	65	125	2.0
	0924				8.3000	12.3700	2151		6535.00			
					0.4150	0.6185	107.55		326.7500			
							567.5500		786.7500			

PARTICULATE EMISSION DATA CALCULATION SHEET

CH2M HILL

MONTGOMERY OFFICE

807 SOUTH McDONOUGH STREET
MONTGOMERY, ALABAMA 36104
205/834-2870

Plant LEHIGH

Date 9/21/84 Run # 1

Sampling Location CLINKER COOLER

Sampling Data

$\bar{T}_s$ = 737 °R; $\bar{T}_m$ = 568 °R

C_p = ~~1.10~~ 0.85; $(\sqrt{\Delta p})_{avg}$ = 0.415

P_s = 29.944 in.Hg; M_s = 27.97 g/g-mole

A_s = 68.417 sq.ft.; V_m = 27.944 cu.ft.

H_2O (condensate) = 15 mls

H_2O (silica gel) = 12 grams

ΔH_{avg} = 0.619 in H_2O; P_b = 29.96 in Hg

Total particulate = 0.1892 grams

1. Calculate Stack gas velocity--

$$V_s = 85.49\ C_p\ (\sqrt{\Delta p})avg \sqrt{\frac{T_s}{P_s M_s}}$$

$$V_s = 85.49\ (\cancel{1.10}\ 0.85)(0.415)\sqrt{\frac{787}{29.944(27.97)}}$$

V_s = ~~37.83~~ 29.23 fps Dm

2. Calculate volume of water vapor in gas sample--

$$V_{wstd} = (0.0474)\left(\begin{matrix}\text{mls } H_2O \\ \text{condensate}\end{matrix} + \begin{matrix}\text{grams } H_2O \\ \text{silica gel}\end{matrix}\right)$$

$$V_{wstd} = (0.0474)(15 + 12) = (0.0474)(27) = 1.28 \text{ cu.ft.}$$

3. Calculate gas sample volume at standard conditions--

$$V_{mstd} = (17.64)(V_m)\left(\frac{P_b + \frac{\Delta H}{13.6}}{T_m}\right)$$

$$V_{mstd} = (17.64)(27.944)\left(\frac{29.96 + \frac{0.619}{13.6}}{568}\right) = (___)(0.0528) = 26.04 \text{ cu.ft.}$$

4. Calculate percent moisture in gas stream--

$$B_{ws} = \frac{V_{wstd}}{V_{mstd} + V_{wstd}} = \frac{1.28}{26.04 + 1.28} = 0.047 = 4.7\%$$

5. Calculate stack gas volumetric flow rate, dry basis, std. conditions--

$$Q_{stpd} = 3600(1-B_{ws})V_s A_s \frac{528}{T_s} \frac{P_s}{29.92}$$

$$Q_{stpd} = 3600\ (1-.047)(\cancel{37.83}\ 29.23)(68.417)(528/787)(29.944/29.92) = ____ \text{ cu.ft./}$$ ~~5962154~~ 4606761 Dm

6. Calculate grain loading--

grains/sdcf = (15.43)(grams)/V_{mstd} = (15.43)(0.1892)/(26.04) = 0.112

7. Calculate mass emission rate--

$$\text{lbs/hr} = (\text{grains/stdcf})(Q_{stpd})(1.43 \times 10^{-4})$$

$$\text{lbs/hr} = (\cancel{5962154}\ 4606761)(0.1121)(1.43 \times 10^{-4}) = \cancel{95.53}\ 73.85$$ Dm

CH2M HILL

MONTGOMERY OFFICE

607 SOUTH McDONOUGH STREET
MONTGOMERY, ALABAMA 36104
205/834-2670

Client LEHIGH

Date 9/21/84 Run # 1

Sampling Location CLINKER COOLE

CALCULATION OF STACK GAS MOLECULAR WEIGHT (M_s)

Average Orsat Analysis (dry)

Moisture Content = 4.7 %

$\%CO_2$ = 0.7

$\% O_2$ = 4.0

$\%CO$ = —

$\% N_2$ = 95.3

Component	% Vol/100	X	Moisture Correction	X	Molecular Weight	=	Wt./Mole (wet base)
H_2O	.047	x	1.0	x	18.0	=	0.85
CO_2	0.007	x	.953	x	44.0	=	0.29
O_2	0.04	x	.953	x	32.0	=	1.22
CO	—	x	—	x	28.0	=	—
N_2	.953	x	.953	x	28.2	=	25.61

Average Molecular Wt., wet basis (M_s) = 27.97 lb/lb-mole

Density of gas referred to air = $\frac{27.97}{28.95}$ = 0.966

Gas density correction factor = $\sqrt{\frac{1.00}{0.966}} = \sqrt{1.035} = 1.02$

CH2M HILL

MONTGOMERY OFFICE

807 SOUTH McDONOUGH STREET
MONTGOMERY, ALABAMA 36104
205/834-2870

Client LEHIGH

Date 9/21/84 Run# 1

Sampling Location CLINKER COOLER

CALCULATION OF ISOKINETIC RATE

$$I = \frac{T_s \left(1.667 \frac{min}{sec}\right) \left[\left(0.00267 \frac{in.\ Hg\text{-}cu.ft.}{ml - {}^\circ R}\right) V_l + \frac{V_m}{T_m}\left(P_{bar} + \frac{\Delta H}{13.6}\right)\right]}{\theta V_s P_s A_n}$$

Where I = % of isokinetic sampling T_s = Avg. stack temperature = 787 °R

V_l = Total volume of liquid collected in impingers & silica gel = 27 ml

V_m = Gas sample thru dry gas meter @ meter conditions = 27.944 cu.ft.

T_m = Average dry gas meter temperature = 568 °R

P_{bar} = Barometric pressure @ sampling site = 29.96 in.Hg

ΔH = Average pressure drop across orifice = 0.619 in.H_2O

θ = Total sampling time = 60 min.

V_s = Stack gas velocity 29.23 ~~37.83~~ fps

P_s = Stack gas pressure = 29.944 in.Hg

A_n = Cross-sectional area of nozzle = 0.000363 sq.ft.

$$I = \frac{(787)(1.667)\left[(0.00267)(27) + \frac{27.944}{568}\left(29.96 + \frac{0.619}{13.6}\right)\right]}{(60)(\cancel{37.83}\ 29.23)(29.944)(0.000363)}$$

$$I = \frac{(\quad)\left[(\quad) + (\quad)(\quad)\right]}{(\quad)}$$

$$I = \frac{(\quad)[0.0721 + 1.4762]}{(\quad)} = \frac{(\quad)[\quad]}{(\quad)} = ____$$

I= ____ = ~~82.33~~ 106.6 % of isokinetic sampling

CH2M HILL

MONTGOMERY OFFICE

807 SOUTH McDONOUGH STREET
MONTGOMERY, ALABAMA 36104
205/834-2870 A DIVISION OF CH2M HILL

VMH
JCOH
9/21/84

PLANT Lehigh
DATE 9/21/84 RUN NUMBER 2 (9)
TIME START 1010 TIME END
MATERIAL PROCESSING RATE
SAMPLING LOCATION CLINKER COOLER
WEATHER HAZY
AMBIENT TEMP. 86 °F STACK PRESS. -0.22" H2O "Hg
BAROMETRIC PRESS. 29.96 "Hg WET BULB °F
DRY BULB °F MOISTURE %
DEW POINT °F

TEST CONDUCTED BY: Martin / Cooper

NOZZLE DIA. .258 in.
PITOT CORR. FACTOR .85
ORIFICE CORR. FACTOR 1.855

FILTER NUMBER
SILICA GEL NUMBER

READING	GAS METER	IMPINGER COND.
FINAL	913.619	210
INITIAL	882.152	200
NET	31.467	10

ORSAT READING

% CO_2
% O_2 4th run
% CO
% N_2

REMARKS: SEE RUN 1

SKETCH:

SEE RUN 1

FINAL LEAK CHECK
SAMPLE TRAIN AT 12 in.Hg
FINAL .036
INITIAL .030
LEAK .006/min.
PITOT
IMPACT 0 at 3.8 in.
STATIC 0 at 5.0 in.

Silica gel = 13.5g

(HIGHER FLOW / T_s than RUN #1)

DIA. in.
AREA ft²

STACK INFORMATION
DISTANCE FROM DISTURBANCE: DOWNSTREAM ft.
UPSTREAM ft.

PORT # / POINT #	DISTANCE FROM PORT (in.)	TIME	GAS METER VOLUME (ft³)	STACK VELOCITY HEAD-Δp (in. H2O)	$\sqrt{\Delta p}$	ORIFICE VELOCITY HEAD-Δp (in. H2O)	GAS METER TEMP. T_m (°F) INLET	GAS METER TEMP. T_m (°F) OUTLET	STACK TEMP.-T_s (°F)	IMPINGER TEMP. (°F)	BOX TEMP. °C	VACUUM (in. Hg)
4/1	1010	0		0.23	.480	0.75	93		420	60	125	—
2	T_s=420 13	3	883.5	0.30	.548	0.95	93		420	60	125	—
3	0.60 10	6	885.2	0.32	.566	1.02	93		420	60	125	—
4	19	9	887.2	0.32	.566	1.02	93		425	65	125	—
5	22	12	888.9	0.25	.500	0.78	93		430	65	130	—
3/1	1029	0	890.6	0.37	.608	1.15	95		420	65	125	—
2	32	3	892.7	0.41	.640	1.30	95		415	65	125	—
3	35	6	894.8	0.45	.671	1.45	96		410	65	125	2.0
4	38	9	897.1	0.43	.656	1.35	97		410	65	125	2.0
							90		410	65	125	2.0

$T_m = 100$, $T_s = 420$, $\%H_2O = 4$, $C = 1.19$, $\Delta P = 0.060$ RUN 2 - Clinker Cooler - 9/21

PORT # / POINT #	DISTANCE FROM PORT (in.)	TIME	GAS METER VOLUME (ft^3)	STACK VELOCITY HEAD- p (in. H_2O)	$\sqrt{\Delta p}$	ORIFICE VELOCITY HEAD- H (in. H_2O)	GAS METER TEMP. T_m (°F) INLET	GAS METER TEMP. T_m (°F) OUTLET	STACK TEMP.-T_s (°F)	IMPINGER TEMP. (°F) ICE	BOX TEMP. ~~(°F)~~ °C	VACUUM (in. Hg)
2 / 1	1049	0	900.9	0.16	.400	0.51	9	7	410	65	130	2.0
2	52	3	902.3	0.16	.400	0.51	9	8	410	65	125	2.0
3	55	6	903.6	0.18	.424	0.57	9	8	410	60	125	2.0
4	58	9	905.1	0.16	.400	0.51	9	8	410	60	125	2.0
5	1101	12	906.3	0.13	.361	0.42	9	8	410	60	125	2.0
1 / 1	4461 DC	0	907.6	0.15	.387	0.48	9	7	~~405~~ 440	60	125	2.0
2	T_s = 0.154 ΔP = 04	3	909.0	0.13	.361	0.42	9	7	445	65	125	2.0
3	12	6	910.1	0.13	.361	0.42	9	7	450	65	125	2.0
4	15	9	911.3	0.13	.387	0.42	9	7	450	65	125	2.0
5	18	12	912.4	0.13	.387	0.42	9	7	450	65	125	2.0
	1121 OFF				9.7280	15.7000	79	20.00	8465.00			
					0.4864	0.7850	96	.00	423.25			
							556	.0000	883.25			

PARTICULATE EMISSION DATA CALCULATION SHEET

CH2M HILL

MONTGOMERY OFFICE

807 SOUTH McDONOUGH STREET
MONTGOMERY, ALABAMA 36104
205/834-2870

Plant Lehigh

Date 9/21/84 Run # 2(9)

Sampling Location Clinker Cooler

Sampling Data

T_s = 883 °R; T_m = 556 °R

C_p = .85; $(\sqrt{\Delta p})_{avg}$ = .486

P_s = 29.944 in.Hg; M_s = 28.085 #/#-mole

A_s = 68.417 sq.ft.; V_m = 31.467 cu.ft.

H_2O (condensate) = 10 mls

H_2O (silica gel) = 13.5 gms

ΔH_{avg} = .785 in H_2O; P_b = 29.96 in Hg

Total particulate = 0.1028 grams

1. Calculate Stack gas velocity--

$$V_s = 85.49\ C_p\ (\sqrt{\Delta p})_{avg} \sqrt{\frac{T_s}{P_s M_s}}$$

$$V_s = 85.49\ (.85)(.486) \sqrt{\frac{883}{(29.944)(28.085)}}$$

$$V_s = 36.188 \text{ fps}$$

2. Calculate volume of water vapor in gas sample--

$$V_{wstd} = (0.0474) \begin{pmatrix} \text{mls } H_2O \\ \text{condensate} \end{pmatrix} + \begin{pmatrix} \text{grams } H_2O \\ \text{silica gel} \end{pmatrix}$$

$$V_{wstd} = (0.0474)(10 + 13.5) = (0.0474)(23.5) = 1.11 \text{ cu.ft.}$$

3. Calculate gas sample volume at standard conditions--

$$V_{mstd} = (17.64)(V_m)\left(\frac{P_b + \frac{\Delta H}{13.6}}{T_m}\right)$$

$$V_{mstd} = (17.64)(31.467)\left(\frac{29.96 + \frac{.785}{13.6}}{556}\right) = (\ )(.0540) = 29.970 \text{ cu.ft.}$$

4. Calculate percent moisture in gas stream--

$$B_{ws} = \frac{V_{wstd}}{V_{mstd} + V_{wstd}} = \frac{1.11}{29.97 + 1.11} = 0.0357 = 3.6\%$$

5. Calculate stack gas volumetric flow rate, dry basis, std. conditions--

$$Q_{stpd} = 3600(1-B_{ws})V_s A_s \frac{528}{T_s} \frac{P_s}{29.92}$$

$$Q_{stpd} = 3600\ (1-.036)(36.188)(68.417)(528/883)(29.944/29.92) = 5,141,971 \text{ cu.ft./}$$

6. Calculate grain loading--

$$\text{grains/sdcf} = (15.43)(\text{grams})/V_{mstd} = (15.43)(.1028)/(29.97) = 0.0529$$

7. Calculate mass emission rate--

$$\text{lbs/hr} = (\text{grains/stdcf})(Q_{stpd})(1.43 \times 10^{-4})$$

$$\text{lbs/hr} = (.0529)(5,141,971)(1.43 \times 10^{-4}) = 38.92$$

CH2M HILL

MONTGOMERY OFFICE

807 SOUTH McDONOUGH STREET
MONTGOMERY, ALABAMA 36104
205/834-2870

Client Lehigh

Date 9-71 Run # (9) 2

Sampling Location Clinker

CALCULATION OF STACK GAS MOLECULAR WEIGHT (M_s)

Average Orsat Analysis (dry)

Moisture Content = 3.6 %

$\%CO_2$ = 0.7

$\% O_2$ = 4.0

$\%CO$ = —

$\% N_2$ = 95.3

Component	% Vol/100	X	Moisture Correction	X	Molecular Weight	=	Wt./Mole (wet base)
H_2O	.036	x	1.0	x	18.0	=	.648
CO_2	.007	x	.964	x	44.0	=	.297
O_2	.040	x	.964	x	32.0	=	1.233
CO	—	x	—	x	28.0	=	—
N_2	.953	x	.964	x	28.2	=	25.907

Average Molecular Wt., wet basis (M_s) = 28.085 lb/lb-mo

Density of gas referred to air = $\overline{28.95}$ =

Gas density correction factor $= \sqrt{\frac{1.00}{}} = \sqrt{}$

CH2M HILL

MONTGOMERY OFFICE

807 SOUTH McDONOUGH STREET
MONTGOMERY, ALABAMA 36104
205/834-2870

Client Lehigh

Date 9/21/84 Run# 2 (9)

Sampling Location Clinker Cooler

CALCULATION OF ISOKINETIC RATE

$$I = \frac{T_s\left(1.667\ \frac{min}{sec}\right)\left[\left(0.00267\ \frac{in.\ Hg\text{-}cu.ft.}{ml - {}^\circ R}\right) V_l + \frac{V_m}{T_m}\left(P_{bar} + \frac{\Delta H}{13.6}\right)\right]}{\theta V_s P_s A_n}$$

Where I = % of isokinetic sampling T_s = Avg. stack temperature = 883 °R

V_l = Total volume of liquid collected in impingers & silica gel = 23.5 ml

V_m = Gas sample thru dry gas meter @ meter conditions = 31.467 cu.ft.

T_m = Average dry gas meter temperature = 556 °R

P_{bar} = Barometric pressure @ sampling site = 29.96 in.Hg

ΔH = Average pressure drop across orifice = 0.785 in.H_2O

θ = Total sampling time = 60 min.

V_s = Stack gas velocity = 36.188 fps

P_s = Stack gas pressure = 29.944 in.Hg

A_n = Cross-sectional area of nozzle = 0.000363 sq.ft.

$$I = \frac{(883)(1.667)\left[(0.00267)(23.5) + \frac{31.467}{556}\left(29.96 + \frac{.785}{13.6}\right)\right]}{(60)(36.188)(29.944)(.000363)}$$

$$I = \frac{(\quad)\left[(\quad) + (\quad)(\quad)\right]}{(\quad)}$$

$$I = \frac{(\quad)[\quad + \quad]}{(\quad)} = \frac{(\quad)[\quad]}{(\quad)} = \quad$$

I = 109.86 = 109.9 % of isokinetic sampling

MONTGOMERY OFFICE

807 SOUTH McDONOUGH STREET
MONTGOMERY, ALABAMA 36104
205/834-2870 *A DIVISION OF CH2M HILL*

CH2M HILL

VMH 9/24/84 JCDH

PLANT Lehigh
DATE 9/21/84 RUN NUMBER 3 (10)
TIME START 1200 TIME END 1307
MATERIAL PROCESSING RATE
SAMPLING LOCATION Clinker Cooler
WEATHER Sunny
AMBIENT TEMP. 86 °F STACK PRESS. -0.22" H_2O "Hg
BAROMETRIC PRESS. 29.96 "Hg WET BULB °F
DRY BULB °F MOISTURE %
DEW POINT °F

TEST CONDUCTED BY: Martin / Cooper

NOZZLE DIA. 0.298 in. FILTER NUMBER
PITOT CORR. FACTOR 0.85 SILICA GEL NUMBER
ORIFICE CORR. FACTOR 1.855

READING	GAS METER	IMPINGER COND.
FINAL	949.428	215
INITIAL	913.707	200
NET	35.721	15

ORSAT READING

O_2	1.0	1.0	1.0
CO_2	4.0	4.0	4.0
% CO		2	
% N_2			

SKETCH:

SEE RUN 1

Silica gel = 12.0g

FINAL LEAK CHECK
SAMPLE TRAIN AT 12 in.Hg
FINAL .056
INITIAL .042
LEAK .014 /min.
PITOT
IMPACT 0 at 4.9 in.
STATIC 0 at 4.4 in.

STACK INFORMATION
DIA. in.
AREA ft^2
DISTANCE FROM DISTURBANCE: DOWNSTREAM ft. UPSTREAM ft.

REMARKS: $T_s = 360$, $T_m = 100$, % $H_2O = 4$, $C = 1.10$, $\Delta P = 0.54$

PORT # / POINT #	DISTANCE FROM PORT (in.)	TIME	GAS METER VOLUME (ft^3)	STACK VELOCITY HEAD-Δp (in. H_2O)	$\sqrt{\Delta p}$	ORIFICE VELOCITY HEAD-Δp (in. H_2O)	GAS METER TEMP. T_m (°F) INLET	GAS METER TEMP. T_m (°F) OUTLET	STACK TEMP.-T_s (°F)	IMPINGER TEMP. (°F)	BOX TEMP. °C	VACUUM (in. Hg)
1/1	1200	0	✓	0.18	.424	0.61	93		370	55	125	—
2	03	3	914.9	0.18	.424	0.61	93		390	60	125	—
3	06	6	916.3	0.18	.424	0.61	93		390	60	125	—
4	T_s=400 09	9	917.7	0.20	.447	0.69	93		400	60	125	—
5	ΔP=.59 12	12	919.2	0.20	.447	0.69	93		400	60	125	—
2/1	ΔP=0.54 1217	0	920.7	0.25	.500	0.84	93		370	65	125	—
2	20	3	922.4	0.25	.500	0.84	94		370	65	125	—
3	T_s=340 ΔP=.52 23	6	923.9	0.24	.490	0.82	94		360	65	125	—
4	ΔP 26	9	925.8	0.25	.500	0.84	94		340	65	125	—
							94		340	65	125	—

RUN 3- Clinker Cooler 4/21/84

PORT # / POINT #	DISTANCE FROM PORT (in.)	TIME	GAS METER VOLUME (ft^3)	STACK VELOCITY HEAD- p (in. H_2O)	$\sqrt{\Delta p}$	ORIFICE VELOCITY HEAD- H (in. H_2O)	GAS METER TEMP. T_m (°F) INLET	GAS METER TEMP. T_m (°F) OUTLET	STACK TEMP.-T_s (°F)	IMPINGER TEMP. (°F)	BOX TEMP. ~~(°F)~~ °C	VACUUM (in. Hg)
1/ 1	1234:30	0	929.0	0.32	.566	1.10	9	5	340	65	125	—
2	37	3	930.7	0.37	.608	1.30	9	5	330	65	125	2.0
3	40	6	932.7	0.39	.625	1.38	9	5	335	ICE 65	125	2.0
4	1300 43	9	935.1	0.35	.592	1.22	9	6	350	60	125	2.0
5	15 46	12	936.7	0.32	.566	1.10	9	6	370	60	125	2.0
4/ 1	0.54 1252	0	938.5	0.37	.608	1.30	9	5	395	60	125	2.0
2	55	3	940.6	0.42	.648	1.45	9	6	395	65	125	2.5
3	58	6	943.1	0.50	.707	1.75	9	6	395	65	125	3.0
4	1301	9	945.1	0.42	.648	1.45	9	7	395	65	125	3.0
5	1304	12	947.3	0.39	.625	1.38	9	7	400	65	125	3.0
					10.7900	20.6800	189	2	7435.00			
	OFF 1307				0.5395	1.0340	94.6000		371.7500			
							554.6000		8331.7500			

PARTICULATE EMISSION DATA CALCULATION SHEET

CH2M HILL

MONTGOMERY OFFICE

807 SOUTH McDONOUGH STREET
MONTGOMERY, ALABAMA 36104
205/834-2870

Plant LEHIGH

Date 9/21/84 Run # 3

Sampling Location CLINKER COOLER

Sampling Data

$\bar{T}_s$ = 832 °R; $\bar{T}_m$ = 555 °R

C_p = ~~1.10~~ 1.85; $(\sqrt{\Delta p})_{avg}$ = 0.54

P_s = 29.944 in.Hg; M_s = 28.09 g/g-mole

A_s = 68.417 sq.ft.; V_m = 35.721 cu.ft.

H_2O (condensate) = 15 mls

H_2O (silica gel) = 12 gms

ΔH_{avg} = 1.034 in H_2O; P_b = 29.96 in Hg

Total particulate = 0.1310 grams

1. Calculate Stack gas velocity--

$$V_s = 85.49\ C_p\ (\sqrt{\Delta p})_{avg} \sqrt{\frac{T_s}{P_s M_s}}$$

$$V_s = 85.49\ (\cancel{1.10}\ 1.85)\ (0.54) \sqrt{\frac{832}{29.944(28.09)}}$$

$$V_s = \cancel{50.50}\ 39.023 \text{ fps}$$

2. Calculate volume of water vapor in gas sample--

$$V_{wstd} = (0.0474)\ \left(\begin{matrix}\text{mls } H_2O & \text{grams } H_2O \\ \text{condensate} & + \text{ silica gel}\end{matrix}\right)$$

$$V_{wstd} = (0.0474)(15 + 12) = (0.0474)\ (27) = 1.28 \text{ cu.ft.}$$

3. Calculate gas sample volume at standard conditions--

$$V_{mstd} = (17.64)(V_m)\left(\frac{P_b + \frac{\Delta H}{13.6}}{T_m}\right)$$

$$V_{mstd} = (17.64)(35.721)\left(\frac{29.96 + \frac{1.034}{13.6}}{555}\right) = (___)(0.0541) = 34.10 \text{ cu.ft.}$$

4. Calculate percent moisture in gas stream--

$$B_{ws} = \frac{V_{wstd}}{V_{mstd} + V_{wstd}} = \frac{1.28}{34.10 + 1.28} = 0.0362 = 3.6\%$$

5. Calculate stack gas volumetric flow rate, dry basis, std. conditions--

$$Q_{stpd} = 3600(1-B_{ws})V_s A_s \frac{528}{T_s} \frac{P_s}{29.92}$$

$$Q_{stpd} = 3600\ (1-.036)\ (\cancel{50.5}\ 39.023)\ (68.417)\ (528/832)\ (29.944/29.92) = \cancel{7615418}\ 5,884,683 \text{ cu.ft}$$

6. Calculate grain loading--

$$\text{grains/sdcf} = (15.43)(\text{grams})/V_{mstd} = (15.43)(0.1310)/(34.10) = 0.059$$

7. Calculate mass emission rate--

$$\text{lbs/hr} = (\text{grains/stdcf})(Q_{stpd})(1.43 \times 10^{-4})$$

$$\text{lbs/hr} = (\cancel{7615418}\ 5,884,683)(0.0543)(1.43 \times 10^{-4}) = \cancel{64.55}\ 49.90$$

CH2M HILL

MONTGOMERY OFFICE

807 SOUTH McDONOUGH STREET
MONTGOMERY, ALABAMA 36104
205/834-2870

Client LEHIGH

Date 9/21/84 Run # 3

Sampling Location CLINKER COOLE

CALCULATION OF STACK GAS MOLECULAR WEIGHT (M_s)

Average Orsat Analysis (dry)

$\%CO_2$ = 0.7

$\%O_2$ = 4.0

$\%CO$ = —

$\%N_2$ = 95.3

Moisture Content = 3.6 %

Component	% Vol/100	X	Moisture Correction	X	Molecular Weight	=	Wt./Mole (wet base)
H_2O	.036	x	1.0	x	18.0	=	0.65
CO_2	.007	x	.964	x	44.0	=	0.30
O_2	.04	x	.964	x	32.0	=	1.23
CO	—	x	—	x	28.0	=	—
N_2	.953	x	.964	x	28.2	=	25.91

Average Molecular Wt., wet basis (M_s) = 28.09 lb/lb-mo

Density of gas referred to air = $\frac{28.09}{28.95}$ = 0.97

Gas density correction factor = $\sqrt{\frac{1.00}{0.97}} = \sqrt{1.03} = 1.015$

CH2M HILL

MONTGOMERY OFFICE

807 SOUTH McDONOUGH STREET
MONTGOMERY, ALABAMA 36104
205/834-2870

Client LEHIGH

Date 9/21/84 Run# 3

Sampling Location CLINKER COOLER

CALCULATION OF ISOKINETIC RATE

$$I = \frac{T_s\left(1.667\ \frac{min}{sec}\right)\left[\left(0.00267\ \frac{in.\ Hg\text{-}cu.ft.}{ml\ -\ °R}\right) V_l + \frac{V_m}{T_m}\left(P_{bar} + \frac{\Delta H}{13.6}\right)\right]}{\theta V_s P_s A_n}$$

Where I = % of isokinetic sampling T_s = Avg. stack temperature = 832 °R

V_l = Total volume of liquid collected in impingers & silica gel = 27 ml

V_m = Gas sample thru dry gas meter @ meter conditions = 35.721 cu.ft.

T_m = Average dry gas meter temperature = 555 °R

P_{bar} = Barometric pressure @ sampling site = 29.96 in.Hg

ΔH = Average pressure drop across orifice = 1.034 in.H_2O

θ = Total sampling time = 60 min.

V_s = Stack gas velocity 39.023 = ~~50.50~~ fps? Don

P_s = Stack gas pressure = 29.944 in.Hg

A_n = Cross-sectional area of nozzle = 0.000363 sq.ft.

$$I = \frac{(832)(1.667)\left[(0.00267)(27) + \frac{35.721}{555}\left(29.96 + \frac{1.034}{13.6}\right)\right]}{(60)(\cancel{50.50}\ 39.023)(29.944)(0.000363)}$$

$$I = \frac{(\quad)\left[(\quad) + (\quad)(\quad)\right]}{(\quad)}$$

$$I = \frac{(\quad)[0.0721 + 1.9332]}{(\quad)} = \frac{(\quad)[\quad]}{(\quad)} = ____$$

$$I = \frac{1}{\cancel{84.44}\ 109.3\ \text{Don}} \text{ \% of isokinetic sampling}$$

APPENDIX C

QUALITY ASSURANCE

METER BOX CALIBRATION DATA AND CALCULATION FORM

(English units)

Date 3/1/24 Meter box number Nutech

Barometric pressure, P_b = 30.03 in. Hg Calibrated by D. Martin

Orifice manometer setting (ΔH), in. H_2O	Gas volume: Wet test meter (V_w), ft^3	Gas volume: Dry gas meter (V_d), ft^3	Temperature: Wet test meter (t_w), °F	Temperature: Dry gas meter Inlet (t_{d_i}), °F	Temperature: Dry gas meter Outlet (t_{d_o}), °F	Temperature: Dry gas meter Avg[a] (t_d), °F	Time (Θ), min	Y_i	$\Delta H@_i$ in. H_2O
0.5	5	222.207 / 227.285	62	63	69	66	12:52	.991	1.811
1.0	6	227.971 / 234.100	62	71	75	73	11:03	.997	1.830
1.5	10	234.551 / 244.882	62	75	82	78.5	15:13	.995	1.856
2.0	10	245.268 / 255.700	62	82	86	84.0	13:17	.994	1.866
3.0	10	256.040 / 266.574	62	87	90	88.5	10:58	.990	1.876
4.0	10	266.958 / 277.438	62	90	95	92.5	9:32	1.000	1.891
							Avg	.995	1.855

ΔH, in. H_2O	$\frac{\Delta H}{13.6}$	$Y_i = \frac{V_w P_b (t_d + 460)}{V_d (P_b + \frac{\Delta H}{13.6})(t_w + 460)}$	$\Delta H@_i = \frac{0.0317\ \Delta H}{P_b (t_d + 460)} \left[\frac{(t_w + 460)\ \Theta}{V_w}\right]^2$
0.5	0.0368	$\frac{5(30.03)(526)}{5.079(30.0668)(522)} = .991$	$\frac{0.0317(0.5)}{30.03(526)}\left[\frac{522(12.067)}{5}\right]^2 = 1.811$
1.0	0.0737	$\frac{6(30.03)(533)}{6.129(30.0737)(522)} = .997$	$\frac{0.0317(1.0)}{30.03(533)}\left[\frac{522(11.05)}{6}\right]^2 = 1.830$
1.5	0.110	$\frac{10(30.03)538.5}{10.331(30.14)(522)} = .995$	$\frac{0.0317(1.5)}{30.03(538.5)}\left[\frac{522(15.22)}{10}\right]^2 = 1.856$
2.0	0.147	$\frac{10(30.03)(544)}{10.432(30.177)(522)} = .994$	$\frac{0.0317(2.0)}{30.03(544)}\left[\frac{522(13.283)}{10}\right]^2 = 1.86$
3.0	0.221	$\frac{10(30.03)(548.5)}{10.534(30.251)(522)} = .9902$	$\frac{0.0317(3.0)}{30.03(548.5)}\left[\frac{522(10.97)}{10}\right]^2 = 1.87$
4.0	0.294	$\frac{10(30.03)(552.5)}{10.48(30.324)(522)} = 1.000$	$\frac{0.0317(4.0)}{30.03(552.5)}\left[\frac{522(9.53)}{10}\right]^2 = 1.89$

[a] If there is only one thermometer on the dry gas meter, record the temperature under t_d.

POSTTEST DRY GAS METER CALIBRATION DATA FORM (English units)

Test number 1-10 Date 10/26/84 Meter box number Nutech Plant Lehigh

Barometric pressure, P_b = 30.01 in. Hg Dry gas meter number Nutech Pretest Y 0.99

	Orifice manometer setting, (ΔH), in. H_2O	Gas volume: Wet test meter (V_w), ft^3	Gas volume: Dry gas meter (V_d), ft^3	Temperature: Wet test meter (t_w), °F	Temperature: Dry gas meter: Inlet (t_{d_i}), °F	Temperature: Dry gas meter: Outlet (t_{d_o}), °F	Temperature: Dry gas meter: Average[a] (t_d), °F	Time (Θ), min	Vacuum setting, in. Hg	Y_i	Y_i $\frac{V_w P_b (t_d + 460)}{V_d \left(P_b + \frac{\Delta H}{13.6}\right)(t_w + 460)}$
10.280	2.0	10	72.188 82.468	76	78	90	84	13:23	8	.9825	$\frac{(10)30.01(544)}{10.280(30.157)536}$
10.379	2.0	10	82.468 92.847	76	88	98	93	12:56	8	.9892	$\frac{10(30.01)532}{10.379(30.157)536}$
10.507	2.0	10	92.847 103.354	76	98	108	103	12:40	8	.9948	$\frac{10(30.01)563}{10.507(30.157)536}$
										Y = .9888	

[a] If there is only one thermometer on the dry gas meter, record the temperature under t_d

where

V_w = Gas volume passing through the wet test meter, ft^3.

V_d = Gas volume passing through the dry gas meter, ft^3.

t_w = Temperature of the gas in the wet test meter, °F.

t_{d_i} = Temperature of the inlet gas of the dry gas meter, °F.

t_{d_o} = Temperature of the outlet gas of the dry gas meter, °F.

t_d = Average temperature of the gas in the dry gas meter, obtained by the average of t_{d_i} and t_{d_o}, °F.

ΔH = Pressure differential across orifice, in. H_2O.

Y_i = Ratio of accuracy of wet test meter to dry gas meter for each run.

Y = Average ratio of accuracy of wet test meter to dry gas meter for all three runs; tolerance = pretest Y $\pm$0.05Y.

P_b = Barometric pressure, in. Hg.

Θ = Time of calibration run, min.

CH2M HILL

SUBJECT PROBE HEAT CALIBRATION

BY [illegible] DATE [illegible]

SHEET NO. 1 OF 2

PROJECT NO.

Our 4' and 6' probes' heats correspond to those given for the inlet ambient temperature of 80°F in the attached figure from Maintenance, Calibration, and Operation of Isokinetic Source-Sampling Equipment, by Jerome J. Rom, Applied Technology Division, USEPA.

For:

1) 8' Probes (glass), 80° Inlet Temp., 0.75 cfm

Rheostat (%)	Outlet Temp (°F)
20	100
40	125
60	180
80	225

2) 9' Probes (glass)

20	100
40	130
60	175
80	215

3) 10' Probes (glass)

100% 240°, After 15 min.

APPENDIX I

CALIBRATION FORM A
(Must Be Included With Field Data Sheet)

Gauge	Average Test Condition Temperature	Gauge Reading	Reference Reading	Difference
Impinger (Pre)	65	72	Room Temp 72	0
Meter In (Pre)	~90	73	Room Temp 72	+1
Meter Out (Pre)			Room Temp	
Filter Heated Area (Pre) (IN OIL)	250	274	248 ± 25°F 272	+2
Stack (Post)	200-400	270	Stack Temp °F 272	-2

Post Test	Run 1	Run 2	Run 3	
Train Leak Rate	____CFM	____CFM	____CFM	ALL RUNS <0.02 cfm
Pitot Leak Check	____	____	____	O.K.

Pre Test (Answer Yes or No)

Orsat Leak Check	N/A	____	____
Metering System Leak Check	YES		
Barometer Calibrated	YES		
Sample Bag Leak Check (if used)	N/A		

Signature Daniel A Martin Title AIR QUALITY SPEC. Date 10/84

APPENDIX D

PROCESS RECORDS

Main stack Test

LEEDS RAW MILL PROCESS DATA SHEET

DATE 9/17/84

TIME	LOESCHE MILL								AUXILIARIES									REMARKS
	Diff. Pressure	Air Flow	Inlet Temp.	Outlet Temp.	Feed RATE	Vibration	Classifier Speed	Mill Amps	D24 Amps	D24 Speed	D11 Elevator	D41B Elevator	D52 Pump Speed	D52 Pump Press.	FEED BIN Level	OPACITY	Mill ΔP Set Point	
	"WC	1000 CFM	°F	°F	T/h	"/sec	RPM	A	A	RPM	A	A	RPM	PSI	TONS	%	%	
2:45 PM	36	182	580	195	8.6	—	46	160/15	200	1180	24	21	1180	25	—	10	72	Test #1
3PM	35	183	580	195	8.9	—	46	160/15	205	1180	25	22	1180	27	—	9	72	
3:15 PM	36	180	595	195	8.8	—	46	160/15	200	1180	30	21	1180	29	—	8	72	
3:30 PM	36	180	595	195	8.9	—	45	160/15	200	1180	18	22	1180	27	—	8	72	
3:45 PM	36.5	182	595	195	8.9	—	45	160/15	200	1180	32	22	1180	27	—	8	72	
4PM	36	180	595	195	9.1	—	45	160/15	200	1180	30	22	1180	28	—	9	72	
8PM																		
10PM																		
12AM																		
2AM																		
4AM																		
6AM																		

LEEDS KILN PROCESS DATA SHEET

DATE 9/17/84

Main Stack Test

TIME	PREHEATER								KILN			COOLER												SPRAY TOWER			COAL MILL							REMARKS
	Feed Rate	ID-30 Speed	ID-30 Draft	Stage 1 Exit Draft	Stage 1 Gas Temp.	Stage 4 Gas Temp.	Preh. Exit O2	ID-24 Speed	Kiln Speed	Kiln Amps	Kiln Exit O2	Sec. Air Temp.	#1 Grate Speed	#1 Undergrate Press.	#2 Undergrate Press.	#4 Undergrate Press.	#1 Fan Flow	#2 Fan Flow	#3 Fan Flow	#4 Fan Flow	Kiln Hood Draft	Vent Fan Damper	Filter Inlet Temp.	Spray Tower Inlet Temp.	Spray Tower Outlet Temp.	Water Spray	Coal Feed	Mill Inlet Temp.	Mill Outlet Temp.	Mill Inlet Draft	Mill Drive Amps	System Fan Damper	Prim. Air Fan Damper	Dust Trap Temp.	
	t/h	RPM	"WC	"WC	°F	°F	%	RPM	RPM	A	%	°F	SPM	"WC	"WC	"WC	x1000 CFM	x1000 CFM	x1000 CFM	x1000 CFM	"WC	%	°F	°F	°F	GPM	t/h	°F	°F	"WC	A	%	%	°F	
2:45 PM	134	1040	-4	34	705	1505	X	1180	112	10-12	1	1680	5	10	11	7.2	10.4	16	17	19	.04	100	480	—	—	—	10.6	490	160	.9	29	60	37	[illegible]	Test #1
3 PM	134	1040	-4	34	710	1500	X	1180	112	8-12	1	1650	4.5	12	13	7.6	X	16	17	17	.05	68	330	—	—	—	10.7	475	155	.85	29	60	37	[illegible]	
3:15 PM	134	1040	-4	34.5	710	1500	X	1180	112	8-12	.9	1725	5	13.4	14.2	7	X	15.6	16	15.5	.065	60	420	—	—	—	10.8	480	162	.6	28	60	37	[illegible]	
3:30 PM	134	1040	-5	34	710	1505	X	1180	112	8-12	.8	1700	5	13.2	14.4	6.8	X	15.8	16	20	.07	70	410	—	—	—	10.8	485	165	.9	28	60	37	700	
3:45 PM	134	1040	-4	33.5	700	1500	X	1180	112	8-12	.9	1750	7½	13.6	16.5	10.2	X	17	15	18	.04	78	410	—	—	—	10.8	485	165	.25	28	60	37	740	
4 PM	134	1040	-4.5	33	705	1505	X	1180	112	7-11	.9	1750	5.5	14	15	4.8	X	16	18	16	.08	48	420	—	—	—	10.8	480	160	.25	28	60	37	660	
8 PM																																			
10 PM																																			
12 AM																																			
2 AM																																			
4 AM																																			
6 AM																																			

LEEDS RAW MILL PROCESS DATA SHEET

DATE 9/18/84

Main STACK Test

TIME	LOESCHE MILL								AUXILIARIES									REMARKS
	Diff. Pressure	Air Flow	Inlet Temp.	Outlet Temp.	Feed RATE	Vibration	Classifier Speed	Mill Amps	D24 Amps	D24 Speed	D11 Elevator	D41B Elevator	D52 Pump Speed	D52 Pump Press.	FEED BIN LEVEL	OPACITY	Mill ΔP Set Point	
	"WC	1000 CFM	°F	°F	T/h	"/sec	RPM	A	A	RPM	A	A	RPM	PSI	TONS	%	%	
30 7AM																		Test #2
45 7AM									165	680	15	11	250	2½		7		MILL OFF (#1)
8AM									163	680	16	11	240	2		6		
15 8AM									165	680	—	12	400	3		7		
30 8AM									163	680	—	12	400	2½		8		
45 8AM									163	700	—	12	400	2		12		
9AM																		
10PM																		
12AM																		
2AM																		
4AM																		
6AM																		

LEEDS KILN PROCESS DATA SHEET

DATE 9/18/84

Main Stack Test

TIME	PREHEATER								KILN			COOLER												SPRAY TOWER			COAL MILL							REMARKS
	Feed Rate	ID-30 Speed	ID-30 Draft	Stage 1 Exit Draft	Stage 1 Gas Temp.	Stage 4 Gas Temp.	Preh. Exit O2	ID-24 Speed	Kiln Speed	Kiln Amps	Kiln Exit O2	Sec. Air Temp.	#1 Grate Speed	#1 Undergrate Press.	#2 Undergrate Press.	#4 Undergrate Press.	#1 Fan Flow	#2 Fan Flow	#3 Fan Flow	#4 Fan Flow	Kiln Hood Draft	Vent Fan Damper	Filter Inlet Temp.	Spray Tower Inlet Temp.	Spray Tower Outlet Temp.	Water Spray	Coal Feed	Mill Inlet Temp.	Mill Outlet Temp.	Mill Inlet Draft	Mill Drive Amps	System Fan Damper	Prim. Air Fan Damper	Dust Trap Temp.	Test #2 Mill off (#1)
	t/h	RPM	"WC	"WC	°F	°F	%	RPM	RPM	A	%	°F	SPM	"WC	"WC	"WC	x1000 CFM	x1000 CFM	x1000 CFM	x1000 CFM	"WC	%	°F	°F	°F	GPM	t/h	°F	°F	"WC	A	%	%	°F	
7:30 AM																																			
7:45 AM	142	1040	-5	34	700°	1505	—	680	118	8/10	.5	1800	5	13.5	14.5	7.2	—	16	19	18	.05	100	520	520	305	68	10.2	380	155	.8	29	60	37	630	140 TPH Average Feed to Kiln
8 AM	140	1040	-5	33½	700	1505	—	680	118	8/10	.5	1800	5½	14½	15½	7.8	—	16	16	17	.04	92	420	525	305	64	10.2	370	150	.8	29	60	37	630	
8:15 AM	140	1040	-5	33½	705	1505	—	680	118	8/10	.6	1750	5	13½	14½	7.4	—	16	17	15	.02	100	420	520	305	68	10.2	380	160	.9	28	60	37	610	
8:30 AM	140	1040	-5	33½	700	1505	—	680	118	7/10	.5	1800	5	14.2	15.2	7.2	—	15	19	16	.05	95	520	525	305	64	10.2	380	155	.7	29	60	37	650	
8:45 AM	140	1040	-5	33½	700	1505	—	680	118	7/11	.5	1820	6	14.2	15.4	7.2	—	15	17½	15	.07	92	520	526	305	62	10.2	370	155	.7	29	60	37	620	
9 PM																																			
10 PM																																			
12 AM																																			
2 AM																																			
4 AM																																			
6 AM																																			

LEEDS RAW MILL PROCESS DATA SHEET

Main STACK Test

DATE 9-18-84

TIME	LOESCHE MILL								AUXILIARIES									REMARKS
	Diff. Pressure	Air Flow	Inlet Temp.	Outlet Temp.	Feed RATE	Vibration	Classifier Speed	Mill Amps	D24 Amps	D24 Speed	D11 Elevator	D41B Elevator	D52 Pump Speed	D52 Pump Press.	Feed Bin Level	Opacity	Mill ΔP Set Point	Test #3
	"WC	1000 CFM	°F	°F	T/h	"/sec	RPM	A	A	RPM	A	A	RPM	PSI	Tons	%	%	Mill off (#2)
9:15 AM									162	700		11	410	3		11		
10:30 AM									165	690		11	400	3		10		
10:45 PM									165	690		11	405	3		9		
11 PM									165	690		11	405	2½		8		
11:15 AM									165	690		11	400	3		10		
6PM																		
8PM																		
10PM																		
12AM																		
2AM																		
4AM																		
6AM																		

LEEDS KILN PROCESS DATA SHEET

DATE 9-18-84

MAIN STACK Test

TIME	PREHEATER								KILN			COOLER												SPRAY TOWER			COAL MILL								REMARKS
	Feed Rate	ID-30 Speed	ID-30 Draft	Stage 1 Exit Draft	Stage 1 Gas Temp.	Stage 4 Gas Temp.	Preh. Exit O2	ID-24 Speed	Kiln Speed	Kiln Amps	Kiln Exit O2	Sec. Air Temp.	#1 Grate Speed	#1 Undergrate Press.	#2 Undergrate Press.	#4 Undergrate Press.	#1 Fan Flow	#2 Fan Flow	#3 Fan Flow	#4 Fan Flow	Kiln Hood Draft	Vent Fan Damper	Filter Inlet Temp.	Spray Tower Inlet Temp.	Spray Tower Outlet Temp.	Water Spray	Coal Feed	Mill Inlet Temp.	Mill Outlet Temp.	Mill Inlet Draft	Mill Drive Amps	System Fan Damper	Prim. Air Fan Damper	Dust Trap Temp.	Test #3 Mill Off (#2)
	t/h	RPM	"WC	"WC	°F	°F	%	RPM	RPM	A	%	°F	SPM	"WC	"WC	"WC	x1000 CFM	x1000 CFM	x1000 CFM	x1000 CFM	"WC	%	°F	°F	°F	GPH	t/h	°F	°F	"WC	A	%	%	°F	
10 AM	140	1040	-5	33½	700	1505	.7	700	118	7/11		1720	5	12½	13	5½		16	20	17	.06	100	430	520	305	62	10.2	475	155	1	28	60	37	650	
10:30 AM	138	1040	-5	33½	700	1505	.5	700	118	9/11		1770	6	14.6	15.7	6.8		17	18	15	.04	95	440	525	305	64	10.2	470	155	.9	28	60	37	660	
11 PM	138	1040	-5	33½	700	1505	.5	690	118	7/10		1800	5½	14	15.4	9.4		16	17	14	.06	90	470	520	305	64	10.2	475	155	.8	27	60	37	660	
11:30 PM	136	1040	-5	33½	705	1505	1.1	690	118	9/12		1700	5	12½	13½	5		15½	16½	15	.07	80	400	525	305	66	10.2	350	145	1.1	28	60	37	520	
11:45 PM	136	1040	-5	33	705	1505	.9	690	118	10/12		1700	5	12.8	14.6	5.8		16	19	17	.045	90	420	525	305	68	10.2	370	145	.8	29	60	37	580	
11:30 PM																																			
8 PM																																			
10 PM																																			
12 AM																																			
2 AM																																			
4 AM																																			
6 AM																																			

138 TPH Average Feed to Kiln

LEEDS RAW MILL PROCESS DATA SHEET

DATE 9/18/84

MAIN STACK Test

TIME	LOESCHE MILL								AUXILIARIES									REMARKS
	Diff. Pressure	Air Flow	Inlet Temp.	Outlet Temp.	Feed RATE	Vibration	Classifier Speed	Mill Amps	D24 Amps	D24 Speed	O11 Elevator	D41B Elevator	D52 Pump Speed	D52 Pump Press.	FEED BIN Level	OPACITY	Mill ΔP Set Point	
	"WC	1000 CFM	°F	°F	T/h	"/sec	RPM	A	A	RPM	A	A	RPM	PSI	TONS	%	%	
8 AM	↑	↑	↑	↑	↑	↑	↑	↑	162	680	↑	11	405	2	↑	6	↑	Test #4
15 10 PM									162	680		11	405	2		6		Mill Off (#3)
30 12 PM									162	680		11	405	2		10		
45 2 PM									162	680		11	405	3		8		
4 PM																		
15 6 PM																		
30 8 PM																		
45 10 PM	↓	↓	↓	↓	↓	↓	↓	↓			↓				↓		↓	
12 AM																		
2 AM																		
4 AM																		
6 AM																		

LEEDS KILN PROCESS DATA SHEET

DATE _____

Main Stack Test

TIME	PREHEATER								KILN			COOLER												SPRAY TOWER			COAL MILL								REMARKS
	Feed Rate	ID-30 Speed	ID-30 Draft	Stage 1 Exit Draft	Stage 1 Gas Temp.	Stage 4 Gas Temp.	Exit O2	ID-24 Speed	Kiln Speed	Kiln Amps	Kiln Exit O2	Sec. Air Temp.	#1 Grate Speed	#1 Undergrate Press.	#2 Undergrate Press.	#4 Undergrate Press.	#1 Fan Flow	#2 Fan Flow	#3 Fan Flow	#4 Fan Flow	Kiln Hood Draft	Vent fan Damper	Filter Inlet Temp.	Spray Tower Inlet Temp.	Spray Tower Outlet Temp.	Water Spray	Coal Feed	Mill Inlet Temp.	Mill Outlet Temp.	Mill Inlet Draft	Mill Drive Amps	System Fan Damper	Prim. Air Fan Damper	Dust Trap Temp.	Test #4
	t/h	RPM	"WC	"WC	°F	°F	%	RPM	RPM	A	%	°F	SPM	"WC	"WC	"WC	x1000 CFM	x1000 CFM	x1000 CFM	x1000 CFM	"WC	%	°F	°F	°F	GPM	t/h	°F	°F	"WC	A	%	%	°F	Mill off (#3)
10 PM	135	1040	-5	33	710	1510	1.5	680	110	8/15		1850	5½	14	15	5.4		16	19	15	.06	95	550	540	305	72	10.2	360	140	1	28	60	37	640	
10:30 PM	135	1040	-5	33	910	1510	.6	680	110	11/16		1900	7	13	15	9.5		16	18	17	.06	100	600	550	305	68	10.2	480	150	.8	28	60	37	730	
11 PM	135	1040	-5	33	710	1510	2.2	680	110	10/11		1850	7	15.5	17	5		15½	16½	15	.07	90	510	530	305	68	10.2	355	140	1	28	60	37	590	135 TPH Feed to Kiln
11:30 PM	135	1040	-5	33	710	1510	1.3	680	110	9/15		1800	5	12.2	13	6.5		16	19	17	.04	100	600	530	305	67	10.2	480	150	1	28	60	37	720	
12 PM	135	1040	-5	32½	710	1510	.8	680	110	8/15		1720	4½	14.5	16.2	10		17	18	17	.04	86	550	540	305	68	10.2	470	150	.8	27	60	37	730	
12:30 PM	135	1040	-5	33	710	1510	2.3	680	110	6/12		1750	5	13	14	4.9		15	17	15	.09	62	440	540	305	67	10.2	340	135	.8	27	60	37	560	
1 PM																																			
1:30 PM																																			
2 PM																																			
2:30 PM																																			
3 PM																																			
4 AM																																			
6 AM																																			

LEEDS RAW MILL PROCESS DATA SHEET

DATE 2/19/84

Main Stack Test

TIME	LOESCHE MILL								AUXILIARIES									REMARKS
	Diff. Pressure	Air Flow	Inlet Temp.	Outlet Temp.	Feed RATE	Vibration	Classifier Speed	Mill Amps	D24 Amps	D24 Speed	D11 Elevator	D41B Elevator	D52 Pump Speed	D52 Pump Press.	FEED BIN Level	Opacity	Mill ΔP Set Point	Test #5 Mill off (#4)
	"WC	1000 CFM	°F	°F	T/h	"/sec	RPM	A	A	RPM	A	A	RPM	PSI	TONS	%	%	
10 3PM									162	695	15	11	405	3		7		
25 3PM									161	695	15	11	410	3		9		
40 3PM									162	695	15	11	405	3		7		
55 3PM									161	695	15	11	405	2½		7		
10 4PM									160	695	15	12	405	3		9		
25 4PM																		
40 4PM																		
10PM																		
12AM																		
2AM																		
4AM																		
6AM																		

LEEDS KILN PROCESS DATA SHEET

Main Stack Test

DATE 2/19/84

TIME	PREHEATER								KILN			COOLER												SPRAY TOWER			COAL MILL							REMARKS
	Feed Rate	ID-30 Speed	ID-30 Draft	Stage 1 Exit Draft	Stage 1 Gas Temp.	Stage 4 Gas Temp.	Preh. Exit O2	ID-24 Speed	Kiln Speed	Kiln Amps	Kiln Exit O2	Sec. Air Temp.	#1 Grate Speed	#1 Undergrate Press.	#2 Undergrate Press.	#4 Undergrate Press.	#1 Fan Flow	#2 Fan Flow	#3 Fan Flow	#4 Fan Flow	Kiln Hood Draft	Vent Fan Damper	Filter Inlet Temp.	Spray Tower Inlet Temp.	Spray Tower Outlet Temp.	Water Spray	Coal Feed	Mill Inlet Temp.	Mill Outlet Temp.	Mill Inlet Draft	Mill Drive Amps	System Fan Damper	Prim. Air Fan Damper	Dust Trap Temp.	
	t/h	RPM	"WC	"WC	°F	°F	%	RPM	RPH	A	%	°F	SPM	"WC	"WC	"WC	x1000 CFM	x1000 CFM	x1000 CFM	x1000 CFM	"WC	%	°F	°F	°F	GPH	t/h	°F	°F	"WC	A	%	%	°F	
3:10 PM	135	1040	-5	33	700	1500		695	100	10/16	1	1775	5	13.8	14.6	7.5		16	18	17	.05	100	480	540	305	67	10.2	375	140	.7	27	60	37	630	Test #5
3:25 PM	135	1040	-5	33	700	1500		695	103	10/16	1.1	1775	5	12.8	13	9.4		16	16	16	.06	90	440	540	305	65	10.2	380	140	1.1	27	60	37	670	Mill off (#4)
3:40 PM	135	1040	-5	32½	700	1500		695	95	10/14	1.4	1750	5	12.2	12.8	9		16	20	15	.02	100	720	540	305	66	10.2	519	150	.7	28	60	37	800	
3:55 PM	132	1040	-5	32½	700	1505		695	90	10/16	1.6	1500	5	9.6	9.2	3.3		15	16	15	.08	70	420	540	300	68	10.2	370	140	.7	27	60	37	590	134 TPH feed to kiln
4:10 PM	132	1040	-5	32½	705	1505		695	92	11/17	1.5	1610	5	12.2	13.5	6.6		16	18	16	.07	74	330	550	305	70	10.2	380	140	.9	27	60	37	630	
4:25 PM																																			
4:40 PM																																			
10 PM																																			
12 AM																																			
2 AM																																			
4 AM																																			
6 AM																																			

LEEDS KILN PROCESS DATA SH

Main Stack Test

TIME	PREHEATER								KILN			COOLER												
	Feed Rate	ID-30 Speed	ID-30 Draft	Stage 1 Exit Draft	Stage 1 Gas Temp.	Stage 4 Gas Temp.	Preh. Exit O2	ID-24 Speed	Kiln Speed	Kiln Amps	Kiln Exit O2	Sec. Air Temp.	#1 Grate Speed	#1 Undergrate Press.	#2 Undergrate Press.	#4 Undergrate Press.	#1 Fan Flow	#2 Fan Flow	#3 Fan Flow	#4 Fan Flow	Kiln Hood Draft	Vent Fan Damper	Filter Inlet Temp.
	t/h	RPM	"WC	"WC	°F	°F	%	RPM	RPH	A	%	°F	SPM	"WC	"WC	"WC	x1000 CFM	x1000 CFM	x1000 CFM	x1000 CFM	"WC	%	°F
05 8 AM	145	1000	-1	28	750	1510	—	1180	120	19/14	—	1700	6	15	16	5	—	16	19	15	.06	60	30
20 8 AM	145	1000	-2	28	750	1510	—	1180	120	19/14	—	1800	7	14	15	7	—	16	19	16	.07	60	32
35 8 AM	145	1000	-1½	28	760	1510	—	1180	120	19/14	2	1830	6	14	15	6	—	15½	18	16	.07	58	40
50 8 PM	152	1000	-1½	28	740	1505	—	1180	120	19/16	3½	1820	8	14.3	16	7½	—	16	17½	15	.07	61	41
05 8 PM	154	1000	-2	28	740	1505	—	1180	120	17/16	3½	1850	7	14.3	15	6.8	—	16	19	15	.07	71	50
20 8 PM	154	1000	-2	29	740	1505	—	1180	120	19/16	3.8	1800	8	14.8	15.8	9	—	17	17	16	.06	72	50
35 8 PM																							
10 PM																							
12 AM																							
2 AM																							
4 AM																							
6 AM																							

LEEDS RAW MILL PROCESS DATA SHEET

Main Stack Test

DATE 2/20/84

TIME	LOESCHE MILL								AUXILIARIES								REMARKS
	Diff. Pressure	Air Flow	Inlet Temp.	Outlet Temp.	Feed RATE	Vibration	Classifier Speed	Mill Amps	D24 Amps	D24 Speed	O11 Elevator	O41B Elevator	O52 Pump Speed	D52 Pump Press.	FEED BIN Level	OPACITY	Mill ΔP Sep. Bin
	"WC	1000 CFM	°F	°F	T/h	"/sec	RPM	A	A	RPM	A	A	RPM	PSI	TONS	%	%
05 8 AM	36	190	610	190	8.4	10/18	48	160	205	1180	26	19	1180	22	68	4	73
20 8 AM	37	190	620	195	8.5	10/18	46	150/175	205	1180	30	20	1180	25	67	5	73
35 8 AM	37	190	620	195	8.6	10/18	46	150/175	208	1180	25	24	1180	26	64	4	73
50 8 PM	37	190	615	195	8.5	10/18	45	150/175	207	1180	23	21	1180	25	56	4	73
05 8 PM	37	190	600	195	8.6	10/18	45	150/175	205	1180	24	22	1180	25	56	4	73
20 8 PM	37	190	600	190	8.4	10/18	46	150/175	205	1180	24	21	1180	25	56	3	73
35 8 PM																	
10 PM																	
12 AM																	
2 AM																	
4 AM																	
6 AM																	

Test #6

Mill ON (#2)

LEEDS RAW MILL PROCESS DATA SHEET

Main Stack Test

DATE 9/20/84

TIME	LOESCHE MILL								AUXILIARIES									REMARKS
	Diff. Pressure	Air Flow	Inlet Temp.	Outlet Temp.	Feed RATE	Vibration	Classifier Speed	Mill Amps	D24 Amps	D24 Speed	D11 Elevator	D41B Elevator	D52 Pump Speed	D52 Pump Press.	FEED BIN Level	OPACITY	Mill ΔP Set Point	
	"WC	1000 CFM	°F	°F	T/H	"/sec	RPM	A	A	RPM	A	A	RPM	PSI	TONS	%	%	
30 10AM	37	185	610	200	8.3	10/18	47	150/175	203	1180	30	21	1180	26	—	4	73	Test #7
45 10AM	37	185	610	200	8.5	11/18	47	150/170	202	1180	22	20	1180	26	—	4	73	Mill On #3
11AM	37	185	610	200	8.5	11/18	46	150/170	200	1180	30	24	1180	25	—	6	73	
15 11AM	37	185	610	200	8.5	11/18	46	150/170	201	1180	22	19	1180	26	—	4	73	
30 12PM	37	190	610	200	8.4	11/19	46	150/170	201	1180	30	19	1180	27	—	4	73	
45 1PM																		
8PM																		
10PM																		
12AM																		
2AM																		
4AM																		
6AM																		

TIME	Feed Rate
	4/H
30 10AM	152
45 10AM	145
11AM	145
15 11AM	141
30 11AM	150
45 11AM	
8 PM	
10 PM	
12 AM	
2 AM	
4 AM	
6 AM	

Cooler Stack Test

LEEDS KILN PROCESS DATA SHEET Test #8

DATE 2/21/84

TIME	PREHEATER														KILN				COOLER														SPRAY TOWER			COAL MILL											PRECIP.		REMARKS	
	KILN FEED RATE	ID – 30 SPEED	ID – 30 AMPS	ID – 30 INLET TEMP.	DOWNCOMER SPRAY	ID – 30 DRAFT	STAGE 1 EXIT DRAFT	STAGE 3 EXIT DRAFT	STAGE 4 EXIT DRAFT	STAGE 1 GAS TEMP.	STAGE 3 GAS TEMP.	STAGE 4 GAS TEMP.	PREH. EXIT OXYGEN	ID – 24 SPEED	KILN SPEED	KILN AMPS	BURNING ZONE TEMP.	KILN EXIT OXYGEN	#1 GRATE SPEED	#2 GRATE SPEED	#1 UNDERGRATE PRESS.	#2 UNDERGRATE PRESS.	#4 UNDERGRATE PRESS.	#1 COOL - FAN AIRFLOW	#2 COOL - FAN AIRFLOW	#3 COOL - FAN AIRFLOW	#4 COOL - FAN AIRFLOW	SECONDARY AIR TEMP.	KILN HOOD DRAFT	VENT FAN DAMPER	FILTER DIFF. PRESSURE	FILTER INLET TEMP.	SPRAY TOWER INLET TEMP.	SPRAY TOWER OUTLET TEMP.	WATER SPRAY	COAL FEED	MILL DRIVE AMPS	MILL INLET TEMP.	MILL OUTLET TEMP.	MILL INLET DRAFT	MILL DIFF. PRESSURE	COAL CYCLONE DIFF. PRESS.	SYSTEM FAN DAMP.	PRIMARY AIR FAN DAMP.	PRIMARY AIR PRESSURE	DUST TRAP INLET TEMP.	KOPPERS OUTLET TEMP.	ID – 24 OXYGEN	OPAC. %	
	TPH	RPM	A	°F	GPM	"WC	"WC	"WC	"WC	°F	°F	°F	%	RPM	RPH	A	°F	%	SPM	SPM	"WC	"WC	"WC	CFM	CFM	CFM	CFM	°F	"WC	%	"WC	°F	°F	°F	GPM	TPH	A	°F	°F	"WC	"WC	"WC	%	%	"WC	°F	°F	%		
8a	155	980	180	650	—	-2	28	15	8½	740	1400	1500	—	1180	120	7/14	—	1.7	9	13	11½	14	12	—	15	19	14	1500	.07	74	12½	600	—	—	—	12.1	27	550	150	.8	—	—	62	44	41	810	160	—	4	
8:26a	150	980	180	650	—	-1.8	27	13	8½	730	1400	1505	—	1180	120	9/17	—	2.2	5	12½	12½	14	5	—	16	16	14	1550	.09	58	10	550	—	—	—	12.1	27	400	140	.1	—	—	62	44	42	610	160	—	4	
8:41p	155	980	175	650	—	2½	27½	14	9	710	1400	1505	—	1180	120	10/16	—	2.3	5	12½	13	14	3½	—	15	15	15	1800	.06	42	8½	500	—	—	—	12.1	28	380	140	.9	—	—	62	44	41	605	160	—	3	
8:56p	155	980	180	650	—	2½	28	15	7.4	720	1400	1505	—	1180	120	10/16	—	2.1	9	13	15	16	8.6	—	16	17	16	1850	.06	62	12	400	—	—	—	12.1	27	490	140	.8	—	—	63	44	41	740	150	—	4	
9:11p	155	980	180	650	—	2½	27½	15	9	730	1400	1505	—	1180	120	8/17	—	2.5	6	13	14	13	5.8	—	16	16	17	1900	.06	60	12	500	—	—	—	12.1	28	450	140	.8	—	—	62	44	41	650	150	—	4	
9:26p																																																			
9:41p																																																			
10p																																																			
12a																																																			
2a																																																			
4a																																																			
6a																																																			

Avg. Kiln Feed = 154 TPH

Cooler Stack Test

LEEDS KILN PROCESS DATA SHEET

Test #9

DATE 2/21/84

TIME	PREHEATER														KILN				COOLER													SPRAY TOWER			COAL MILL											PRECIP.		REMARKS	
	KILN FEED RATE	ID – 3D SPEED	ID – 3D AMPS	ID – 3D INLET TEMP.	DOWNCOMER SPRAY	ID – 3D DRAFT	STAGE 1 EXIT DRAFT	STAGE 3 EXIT DRAFT	STAGE 4 EXIT DRAFT	STAGE 1 GAS TEMP.	STAGE 3 GAS TEMP.	STAGE 4 GAS TEMP.	PREH. EXIT OXYGEN	ID – 2A SPEED	KILN SPEED	KILN AMPS	BURNING ZONE TEMP.	KILN EXIT OXYGEN	#1 GRATE SPEED	#2 GRATE SPEED	#1 UNDERGRATE PRESS.	#2 UNDERGRATE PRESS.	#4 UNDERGRATE PRESS.	#1 COOL - FAN AIRFLOW	#2 COOL - FAN AIRFLOW	#3 COOL - FAN AIRFLOW	#4 COOL - FAN AIRFLOW	SECONDARY AIR TEMP.	KILN HOOD DRAFT	VENT FAN DAMPER	FILTER DIFF. PRESSURE	FILTER INLET TEMP.	SPRAY TOWER INLET TEMP.	SPRAY TOWER OUTLET TEMP.	WATER SPRAY	COAL FEED	MILL DRIVE AMPS	MILL INLET TEMP.	MILL OUTLET TEMP.	MILL INLET DRAFT	MILL DIFF. PRESSURE	COAL CYCLONE DIFF. PRESS.	SYSTEM FAN DAMP.	PRIMARY AIR FAN DAMP.	PRIMARY AIR PRESSURE	DUST TRAP INLET TEMP.	KOPPERS OUTLET TEMP.	ID – 2A OXYGEN	OPACITY	
	TPH	RPM	A	°F	GPM	"WC	"WC	"WC	"WC	°F	°F	°F	%	RPM	RPH	A	°F	%	SPM	SPM	"WC	"WC	"WC	CFM	CFM	CFM	CFM	°F	"WC	%	"WC	°F	°F	°F	GPM	TPH	A	°F	°F	"WC	"WC	"WC	%	%	"WC	°F	°F	%		
10:10 a	160	980	180	650	—	-2.2	28	15	9	720	1380	1500	—	980	128	14/17	—	1.5	8	12½	13.8	15	9.4	—	16	19	16	2000	.03	100	14	600	—	—	—	12.1	28	600	155	1	—	—	62	44	41	800	130	—	3	
10:25 a	160	980	180	650	—	-3	28½	13	8½	720	1380	1500	—	980	128	14/17	—	1.1	8	12½	14.3	15.6	8	—	15	17	16	2050	.05	100	14	580	—	—	—	12.1	30	450	150	.8	—	—	63	44	41	800	130	—	4	
10:40 a	166	980	180	650	—	-2	28	13	9	720	1380	1500	—	980	128	14/17	—	1.9	7½	12½	14.3	15.6	7½	—	15	17	15	2000	.05	100	15	550	—	—	—	12.1	30	350	170	1	—	—	63	44	41	810	120	—	5	
10:55 a	170	980	180	650	—	-3	29	17	9.3	720	1380	1500	—	980	128	14/17	—	1.7	10	12½	16	18.2	9.8	—	14	16	16	2000	.07	94	14.6	550	—	—	—	12.1	29	500	160	.7	—	—	63	44	41	830	120	—	4	
11:10 a	160	980	180	650	—	-3	29	17	10	720	1380	1500	—	980	128	14/17	—	1.7	6	12½	16	18.2	7.8	—	14	16	16	2000	.07	100	13	550	—	—	—	12.1	29	480	150	.1	—	—	63	44	41				4	
11:25 a																																																		
8 p																																																		
10 p																																																		
12 a																																																		
2 a																																																		
4 a																																																		
6 a																																																		

Avg. Kiln Feed = 163 TPH

APPENDIX E

VISIBLE EMISSIONS

Bureau of Environmental Health
Paul Pate, Director

September 25, 1984

Mr. David Martin
Scientist
CH_2M Hill
807 South McDonough Street
P.O. Box 2499
Montgomery, Alabama 36104

Dear Mr. Martin:

As per our conversation Friday, September 21, 1984, enclosed are copies of visible emission readings performed by Sanitarians from this office on the Loesche Mill September 17 - 18, 1984 at Lehigh Cement, Leeds, Alabama. As we had discussed, please include these visible emissions readings in the stack test report.

If you have any questions, please contact me at 933-9110, extension 1280.

Sincerely,

Veda M. Hampton
Air Pollution Control Engineer
Air Pollution Control Program

VMH/bb

Enc.

1400 SIXTH AVENUE, SOUTH P.O. BOX 2646 BIRMINGHAM, ALABAMA 35202 205/933-9110

JEFFERSON COUNTY DEPARTMENT OF HEALTH
BUREAU OF ENVIRONMENTAL HEALTH
AIR POLLUTION CONTROL PROGRAM

VISIBLE EMISSIONS OBSERVATION REPORT

Company Name: Lehigh Cement (Leeds) — Location (1): 18

Source: Kiln — Permit No. (3): 0002901501

Start/Stop Time: 3:13/3:42 — Sky Condition: 50% clouds — Date (13): 091884

Observation Point: SSW of source — Distance from Source: 100 yds

Stack Height: 101' — Background: blue sky — Plume Color: white

Method of Evaluation: (19) 1 Hour Cumulative [ ] (20) 6 Minute Average [X] (21) Other [ ]

Violation Observed (22) [ ] — If Notice Given, Notice Number (23): [ ]

Total Minutes Observed (28): 30 — Highest 6 Minute Average (30): 10

Minutes Exceeding: (32) [ ] % Opacity = (34) [ ], (36) [ ] % Opacity = (38) [ ]

Observer: Cargo (40): 43 — Time Analysis (42): 02 — ID (79): VF

Min.	Seconds 0	15	30	45	Min.	Seconds 0	15	30	45	Min.	Seconds 0	15	30	45	Min.	Seconds 0	15	30	45
0	10	10	10	10	15	10	10	10	10	30					45				
1	10	10	10	10	16	10	10	10	10	31					46				
2	10	10	10	10	17	10	10	10	10	32					47				
3	10	10	10	10	18	10	10	10	10	33					48				
4	10	10	10	10	19	10	10	5	10	34					49				
5	10	10	10	10	20	10	10	5	10	35					50				
6	10	10	10	5	21	10	10	10	10	36					51				
7	10	10	5	10	22	5	5	5	5	37					52				
8	10	10	10	10	23	5	5	5	5	38					53				
9	10	15	10	10	24	10	5	5	5	39					54				
10	10	10	10	10	25	5	5	10	10	40					55				
11	10	10	10	10	26	10	10	10	10	41					56				
12	10	10	10	10	27	10	10	10	15	42					57				
13	10	10	10	10	28	10	10	10	10	43					58				
14	10	10	10	10	29	10	10	10	10	44					59				

Results and Recommendations:

stack test min 9-14 - 10% opacity

run #5

reading point of maximum opacity (detached plume)

MILL OFF

ENV-AP-008-1/84 REVISED

JEFFERSON COUNTY DEPARTMENT OF HEALTH
BUREAU OF ENVIRONMENTAL HEALTH
AIR POLLUTION CONTROL PROGRAM

VISIBLE EMISSIONS OBSERVATION REPORT

Company Name: Lehigh Cement (Leeds) — Location (1): 18

Source: kiln — Permit No. (3): 00029015 01

Start/Stop Time: 1:04/1:33 — Sky Condition: 50% clouds — Date (13): 091884

Observation Point: SSW of source — Distance from Source: 100 yards

Stack Height: 101 ft — Background: blue sky — Plume Color: white

Method of Evaluation: (19) [ ] 1 Hour Cumulative [X] (20) 6 Minute Average [ ] (21) Other

Violation Observed (22): [ ] — If Notice Given, Notice Number (23):

Total Minutes Observed (28): 30 — Highest 6 Minute Average (30): 10

Minutes Exceeding: (32) — % Opacity = (34), (36) — % Opacity = (38)

Observer: Cargo — (40): 43 — Time Analysis (42): 02 — ID (79): VE

Min.	Seconds 0	15	30	45	Min.	Seconds 0	15	30	45	Min.	Seconds 0	15	30	45	Min.	Seconds 0	15	30	45
0	5	5	5	10	15	15	15	10	10	30					45				
1	5	5	10	5	16	10	10	10	10	31					46				
2	5	10	10	5	17	10	10	10	5	32					47				
3	5	5	5	5	18	5	5	5	5	33					48				
4	0	0	0	0	19	5	5	5	5	34					49				
5	0	5	5	5	20	5	5	5	5	35					50				
6	10	10	5	5	21	5	5	5	10	36					51				
7	5	5	10	10	22	5	5	5	5	37					52				
8	5	5	5	5	23	5	5	5	5	38					53				
9	10	10	10	10	24	5	10	10	10	39					54				
10	5	10	5	10	25	10	10	10	10	40					55				
11	10	10	10	15	26	5	5	10	5	41					56				
12	10	10	10	10	27	5	10	10	10	42					57				
13	10	10	10	5	28	10	5	5	5	43					58				
14	10	10	15	15	29	5	5	5	5	44					59				

Results and Recommendations:

stack test min 11-16 = 10% opacity

run # 4

Mill off

reading point of highest opacity (detached plume)

ENV-AP-008-1/84 REVISED

JEFFERSON COUNTY DEPARTMENT OF HEALTH
BUREAU OF ENVIRONMENTAL HEALTH
AIR POLLUTION CONTROL PROGRAM

VISIBLE EMISSIONS OBSERVATION REPORT

Company Name: Lehigh Cement (Leeds) — Location (1): 18

Source: Kiln — Permit No. (3): 0 0 0 2 9 0 1 5 0 1

Start/Stop Time: 10:13/10:42 — Sky Condition: clear — Date (13): 0 9 1 8 8 4

Observation Point: East of source — Distance from Source: 200 yards

Stack Height: 101 ft — Background: sky — Plume Color: white

Method of Evaluation: (19) [ ] 1 Hour Cumulative (20) [X] 6 Minute Average (21) [ ] Other

Violation Observed (22) [ ] — If Notice Given, Notice Number (23)

Total Minutes Observed (28): 3 0 — Highest 6 Minute Average (30): 1 2

Minutes Exceeding: (32) — % Opacity = (34), (36) — % Opacity = (38): 8 [illegible]

Observer: Cargo — (40): 4 3 — Time Analysis (42): 0 2 — ID (79): V F

Min.	Seconds 0	15	30	45	Min.	Seconds 0	15	30	45	Min.	Seconds 0	15	30	45	Min.	Seconds 0	15	30	45
0	10	10	5	5	15	5	10	5	5	30					45				
1	10	5	5	40	16	10	5	5	5	31					46				
2	10	10	10	15	17	10	5	5	5	32					47				
3	5	5	5	10	18	30	10	5	5	33					48				
4	10	15	10	20	19	5	10	10	5	34					49				
5	10	10	10	5	20	10	10	10	10	35					50				
6	10	20	30	15	21	10	10	15	15	36					51				
7	10	10	10	5	22	5	10	10	15	37					52				
8	5	10	10	15	23	15	15	10	10	38					53				
9	10	10	5	10	24	10	10	5	10	39					54				
10	15	10	10	10	25	5	5	10	5	40					55				
11	10	10	5	10	26	5	5	5	10	41					56				
12	5	5	10	5	27	10	5	5	5	42					57				
13	10	10	10	5	28	5	5	10	5	43					58				
14	10	5	5	10	29	5	5	5	5	44					59				

Results and Recommendations:

stack test min 1-6 - 12% opacity
run #3

mill off

ENV-AP-008-1/84 REVISED

JEFFERSON COUNTY DEPARTMENT OF HEALTH
BUREAU OF ENVIRONMENTAL HEALTH
AIR POLLUTION CONTROL PROGRAM

VISIBLE EMISSIONS OBSERVATION REPORT

Company Name: Lehigh Cement (Leeds) — Location (1): 18

Source: Kiln — Permit No. (3): 00029015 01

Start/Stop Time: 7:45/8:14 — Sky Condition: 20% clouds — Date (13): 091884

Observation Point: East of source — Distance from Source: 200 yards

Stack Height: 101 ft — Background: blue sky — Plume Color: white

Method of Evaluation: (19) [ ] 1 Hour Cumulative (20) [X] 6 Minute Average (21) [ ] Other

Violation Observed (22) [ ] — If Notice Given, Notice Number (23)

Total Minutes Observed (28): 30 — Highest 6 Minute Average (30): 11

Minutes Exceeding: (32) — % Opacity = (34) , (36) — % Opacity = (38)

Observer: Cargo — (40): 43 — Time Analysis (42): 02 — ID (79): VF

Min.	Seconds 0	15	30	45	Min.	Seconds 0	15	30	45	Min.	Seconds 0	15	30	45	Min.	Seconds 0	15	30	45
0	15	20	20	15	15	5	5	5	5	30					45				
1	15	15	10	10	16	5	5	5	5	31					46				
2	10	15	10	15	17	5	5	10	10	32					47				
3	15	20	15	5	18	5	10	10	10	33					48				
4	5	5	10	5	19	5	5	5	5	34					49				
5	10	5	10	10	20	5	10	5	5	35					50				
6	5	5	10	5	21	5	10	5	5	36					51				
7	10	10	5	5	22	10	5	5	5	37					52				
8	5	5	10	5	23	5	5	5	5	38					53				
9	5	10	5	5	24	5	10	5	5	39					54				
10	5	5	10	5	25	5	5	10	5	40					55				
11	10	5	5	10	26	5	5	10	5	41					56				
12	10	10	5	5	27	5	5	10	5	42					57				
13	5	10	10	5	28	5	5	5	5	43					58				
14	10	5	10	5	29	5	5	5	5	44					59				

Results and Recommendations:

Stack test min 0-5 = 11% opacity

run #2

MILL OFF

ENV-AP-008-1/84 REVISED

JEFFERSON COUNTY DEPARTMENT OF HEALTH
BUREAU OF ENVIRONMENTAL HEALTH
AIR POLLUTION CONTROL PROGRAM

VISIBLE EMISSIONS OBSERVATION REPORT

Company Name: Lehigh Cement (Leeds) — Location (1): 18

Source: Kiln — Permit No. (3): 00029015 01

Start/Stop Time: 2:48/3:17 — Sky Condition: 75% cloud — Date (13): 091784

Observation Point: SW of source — Distance from Source: 100 yds

Stack Height: 101 ft — Background: clouds + sky — Plume Color: white

Method of Evaluation: (19) [ ] 1 Hour Cumulative (20) [X] 6 Minute Average (21) [ ] Other

Violation Observed (22) [ ] — If Notice Given, Notice Number (23)

Total Minutes Observed (28): 30 — Highest 6 Minute Average (30): 06

Minutes Exceeding: (32) — % Opacity = (34), (36) — % Opacity = (38)

Observer: Cargo — (40): 43 — Time Analysis (42): 02 — ID (79): VE

Min.	Seconds 0	15	30	45	Min.	Seconds 0	15	30	45	Min.	Seconds 0	15	30	45	Min.	Seconds 0	15	30	45
0	0	0	0	0	15	5	5	5	5	30					45				
1	0	0	0	0	16	5	10	5	5	31					46				
2	0	0	0	0	17	10	5	5	10	32					47				
3	0	0	0	0	18	5	5	5	5	33					48				
4	0	0	0	0	19	5	5	10	5	34					49				
5	0	0	0	0	20	5	5	5	5	35					50				
6	0	0	0	0	21	10	5	5	5	36					51				
7	0	0	0	0	22	10	5	10	5	37					52				
8	0	0	0	0	23	5	5	5	5	38					53				
9	0	0	0	0	24	5	10	5	5	39					54				
10	0	0	0	0	25	5	5	5	10	40					55				
11	0	0	0	0	26	5	5	5	5	41					56				
12	0	0	0	0	27	5	5	10	5	42					57				
13	0	0	0	0	28	5	5	5	10	43					58				
14	0	0	0	5	29	5	5	5	10	44					59				

Results and Recommendations:

min 17-22 = 6% opacity

Stack test run #1

mill on

ENV-AP-008-1/84 REVISED

JEFFERSON COUNTY DEPARTMENT OF HEALTH
BUREAU OF ENVIRONMENTAL HEALTH
AIR POLLUTION CONTROL PROGRAM

VISIBLE EMISSIONS OBSERVATION REPORT

VMA
JCDH
9/21/84

Company Name: Lehigh Cement (Leeds) — Location (1): 18

Source: Kiln — Permit No. (3): 0002901501

Start/Stop Time: 8:04/8:33 — Sky Condition: clear — Date (13): 09 2 C 4

Observation Point: East of source — Distance from Source: 200 yards

Stack Height: 101' — Background: blue sky — Plume Color: white

Method of Evaluation: [19] 1 Hour Cumulative [20] [X] 6 Minute Average [21] Other

Violation Observed (22): [ ] — If Notice Given, Notice Number (23):

Total Minutes Observed (28): 30 — Highest 6 Minute Average (30): 3

Minutes Exceeding: (32) % Opacity = (34), (36) % Opacity = (38)

Observer: Cargo (40): 43 — Time Analysis (42): 02 — ID (79): VE

Min.	Seconds 0	15	30	45	Min.	Seconds 0	15	30	45	Min.	Seconds 0	15	30	45	Min.	Seconds 0	15	30	45
0	5	5	5	5	15	5	5	5	5	30					45				
1	5	10	10	5	16	0	0	0	5	31					46				
2	0	0	0	0	17	0	0	5	5	32					47				
3	0	5	5	5	18	0	0	5	5	33					48				
4	5	0	5	5	19	5	0	5	5	34					49				
5	5	5	5	5	20	5	0	0	5	35					50				
6	5	0	0	0	21	5	5	5	5	36					51				
7	5	5	5	5	22	5	5	5	5	37					52				
8	5	5	0	5	23	5	5	0	5	38					53				
9	5	0	0	0	24	5	5	0	0	39					54				
10	5	5	0	0	25	0	5	5	0	40					55				
11	0	0	5	0	26	5	5	0	0	41					56				
12	0	0	0	0	27	5	5	0	0	42					57				
13	0	0	0	0	28	5	0	5	5	43					58				
14	0	0	0	5	29	0	5	0	5	44					59				

Results and Recommendations:

stack test min 0-5 = 3% opacity

run #6

MILL ON

ENV-AP-008-1/84 REVISED

JEFFERSON COUNTY DEPARTMENT OF HEALTH
BUREAU OF ENVIRONMENTAL HEALTH
AIR POLLUTION CONTROL PROGRAM

VISIBLE EMISSIONS OBSERVATION REPORT

9/21/84 JCB

Company Name Lehigh Cement Co. Location (1) 18

Source Kiln Permit No. (3) 0 0 0 2 9 0 1 5 0 1

Start/Stop Time 10:23/10:52 Sky Condition clear Date (13) 0 9 2 0 8 4

Observation Point SE Corner Distance from Source 200 yds

Stack Height 101' Background blue sky Plume Color white

Method of Evaluation: (19) [ ] 1 Hour Cumulative (20) [V] 6 Minute Average (21) [ ] Other

Violation Observed (22) [ ] If Notice Given, Notice Number (23)

Total Minutes Observed (28) 30 Highest 6 Minute Average (30) 03

Minutes Exceeding: (32) % Opacity = (34), (36) % Opacity = (38)

Observer Cargo (40) 43 Time Analysis (42) 02 ID (79) V F

Min.	Seconds 0	15	30	45	Min.	Seconds 0	15	30	45	Min.	Seconds 0	15	30	45	Min.	Seconds 0	15	30	45
0	5	0	5	5	15	0	0	0	5	30					45				
1	0	5	5	0	16	5	5	0	0	31					46				
2	0	5	5	5	17	5	5	5	5	32					47				
3	5	0	5	5	18	5	0	0	5	33					48				
4	0	5	5	0	19	5	5	5	0	34					49				
5	0	5	5	0	20	0	5	5	5	35					50				
6	0	5	5	0	21	0	5	5	5	36					51				
7	0	0	0	0	22	5	5	5	0	37					52				
8	5	0	5	5	23	0	0	0	5	38					53				
9	5	5	5	5	24	0	0	5	5	39					54				
10	5	0	0	5	25	0	5	5	5	40					55				
11	0	0	0	0	26	5	0	5	5	41					56				
12	0	0	0	5	27	0	5	5	5	42					57				
13	5	0	5	5	28	5	0	0	0	43					58				
14	0	0	0	0	29	5	0	5	5	44					59				

Results and Recommendations:

stack test

run #7

min 17-22 = 3% opacity

mill on

ENV-AP-008-1/84 REVISED

JEFFERSON COUNTY DEPARTMENT OF HEALTH
BUREAU OF ENVIRONMENTAL HEALTH
AIR POLLUTION CONTROL PROGRAM

VISIBLE EMISSIONS OBSERVATION REPORT

9/21/84

Company Name Lehigh Cement (Leeds) — Location (1) 18

Source Clinker cooler — Permit No. (3) 0 0 0 2 9 0 1 5 0 2

Start/Stop Time 8:17/8:46 — Sky Condition 10% clouds — Date (13) 0 9 2 1 8 4

Observation Point SE of source — Distance from Source 1000 ft

Stack Height 80 feet — Background Pre-heat towers — Plume Color white

Method of Evaluation: (19) [ ] 1 Hour Cumulative (20) [X] 6 Minute Average (21) [ ] Other

Violation Observed (22) [X] — If Notice Given, Notice Number (23)

Total Minutes Observed (28) 3 0 — Highest 6 Minute Average (30) 1 1

Minutes Exceeding: (32) — % Opacity = (34), (36) — % Opacity = (38)

Observer Cargo (40) 4 3 — Time Analysis (42) 0 2 — ID (79) V F

Min.	Seconds 0	15	30	45	Min.	Seconds 0	15	30	45	Min.	Seconds 0	15	30	45	Min.	Seconds 0	15	30	45
0	15	10	10	10	15	5	5	10	15	30					45				
1	15	10	10	10	16	10	10	5	5	31					46				
2	10	10	10	10	17	5	5	5	5	32					47				
3	5	5	5	15	18	5	5	5	5	33					48				
4	15	15	10	10	19	5	15	10	10	34					49				
5	10	15	15	10	20	5	5	5	5	35					50				
6	10	15	10	10	21	5	5	5	5	36					51				
7	10	10	10	15	22	5	5	5	5	37					52				
8	15	10	10	10	23	10	10	10	5	38					53				
9	10	10	5	10	24	5	5	5	10	39					54				
10	5	5	10	10	25	5	5	5	5	40					55				
11	10	5	5	10	26	10	5	5	5	41					56				
12	10	10	10	10	27	10	5	5	5	42					57				
13	5	5	5	10	28	5	5	5	5	43					58				
14	10	5	5	5	29	5	5	5	5	44					59				

Results and Recommendations:

Stack test run #8 min 4-9 = 11% opacity

ENV-AP-008-1/84 REVISED

JEFFERSON COUNTY DEPARTMENT OF HEALTH
BUREAU OF ENVIRONMENTAL HEALTH
AIR POLLUTION CONTROL PROGRAM

VISIBLE EMISSIONS OBSERVATION REPORT

9/21/84 FCOH

Company Name Lehigh Cement (Roads) Location 1 | 1 8

Source Clinker cooler Permit No. 3 | 0 0 0 2 9 0 1 5 0 2

Start/Stop Time 10:17/10:46 Sky Condition 10% clouds Date 13 | 0 9 2 1 8 4

Observation Point SE of source Distance from Source 1000 ft

Stack Height 80 ft Background pre-heat tower Plume Color white

Method of Evaluation: 19 [ ] 1 Hour Cumulative 20 [X] 6 Minute Average 21 [ ] Other

Violation Observed 22 [X] If Notice Given, Notice Number 23 [ ]

Total Minutes Observed 28 | 3 0 Highest 6 Minute Average 30 | 1 2

Minutes Exceeding: 32 [ ] % Opacity = 34 [ ], 36 [ ] % Opacity = 38 [ ]

Observer Cargot 40 | 4 3 Time Analysis 42 | 0 2 ID 79 | V F

Min.	Seconds 0	15	30	45	Min.	Seconds 0	15	30	45	Min.	Seconds 0	15	30	45	Min.	Seconds 0	15	30	45
0	5	5	10	10	15	5	5	5	5	30					45				
1	10	5	5	5	16	5	5	5	5	31					46				
2	5	5	5	5	17	5	5	10	10	32					47				
3	5	5	5	5	18	5	5	10	5	33					48				
4	5	5	15	5	19	5	5	5	5	34					49				
5	5	5	5	5	20	5	30	5	5	35					50				
6	5	5	5	5	21	5	5	5	5	36					51				
7	10	15	5	5	22	5	5	5	5	37					52				
8	5	15	15	20	23	5	5	5	5	38					53				
9	5	5	0	15	24	10	15	15	10	39					54				
10	10	30	20	5	25	10	10	5	5	40					55				
11	5	5	10	5	26	5	5	5	5	41					56				
12	5	10	10	5	27	10	10	5	5	42					57				
13	0	0	5	5	28	5	10	5	5	43					58				
14	5	5	15	15	29	5	5	5	10	44					59				

Results and Recommendations:

stack test run #9

min 7-17 = 12% opacity
11.46

ENV-AP-008-1/84 REVISED

VMH 9/21/84 JCDH

JEFFERSON COUNTY DEPARTMENT OF HEALTH
BUREAU OF ENVIRONMENTAL HEALTH
AIR POLLUTION CONTROL PROGRAM

VISIBLE EMISSIONS OBSERVATION REPORT

Company Name: Lehigh Cement (Leeds) — Location (1): 18

Source: Clinker Cooler — Permit No. (3): 0 0 0 2 9 0 1 5 0 2

Start/Stop Time: 12:29/12:58 — Sky Condition: 10% clouds — Date (13): 0 9 2 1 8 4

Observation Point: S of Bruce — Distance from Source: 1000 ft

Stack Height: 80 ft — Background: one heat tower — Plume Color: white

Method of Evaluation: (19) [ ] 1 Hour Cumulative (20) [X] 6 Minute Average (21) [ ] Other

Violation Observed (22): [X] — If Notice Given, Notice Number (23):

Total Minutes Observed (28): 3 0 — Highest 6 Minute Average (30): 3 0

Minutes Exceeding: (32) — % Opacity = (34), (36) — % Opacity = (38): 3

Observer: Cargo (40): 4 3 — Time Analysis (42): 0 0 — ID (79): V F

Min.	Seconds 0	15	30	45
0	15	15	15	15
1	25	25	25	25
2	20	10	15	15
3	15	15	15	20
4	15	15	15	10
5	20	15	15	15
6	15	15	10	10
7	10	5	10	5
8	5	10	10	50
9	50	15	10	10
10	5	10	10	5
11	5	5	10	5
12	5	5	5	15
13	15	15	10	10
14	10	10	10	10

Min.	Seconds 0	15	30	45
15	5	10	10	10
16	10	10	15	50
17	40	40	30	30
18	30	30	35	30
19	40	40	40	30
20	30	25	25	30
21	30	30	25	30
22	25	25	25	20
23	20	25	30	20
24	20	25	25	20
25	25	20	20	20
26	20	20	20	20
27	25	15	20	15
28	20	20	25	15
29	15	15	15	10

Min.	Seconds 0	15	30	45
30				
31				
32				
33				
34				
35				
36				
37				
38				
39				
40				
41				
42				
43				
44				

Min.	Seconds 0	15	30	45
45				
46				
47				
48				
49				
50				
51				
52				
53				
54				
55				
56				
57				
58				
59				

Results and Recommendations:

stack test run #10 min 17-22 = 30% opacity

ENV-AP-008-1/84 REVISED