12.2 Coke Production

12.2.1 General

Metallurgical coke is produced by the destructive distillation of coal in coke ovens. Prepared coal is heated in an oxygen-free atmosphere (–coked–) until most volatile components in the coal are removed. The material remaining is a carbon mass called coke.

Metallurgical coke is used in iron and steel industry processes (primarily in blast furnaces) to reduce iron ore to iron. Over 90 percent of the total coke production is dedicated to blast furnace operations. Foundry coke comprises most of the balance and is used by foundries in furnaces for melting metal and in the preparation of molds. Foundry coke production uses a different blend of coking coals, longer coking times, and lower coking temperatures relative to those used for metallurgical coke.

Most coke plants are collocated with iron and steel production facilities, and the demand for coke generally corresponds with the production of iron and steel. There has been a steady decline in the number of coke plants over the past several years for many reasons, including a decline in the demand for iron/steel, increased production of steel by mini-mills (electric arc furnaces that do not use coke), and the lowering of the coke:iron ratio used in the blast furnace (e. g., increased use of pulverized coal injection). There were 18 coke plants operating in the U. S. in 2007.

12.2.1 Process Description[1-9, 16, 194]

Most coke is produced in the U. S. using the "byproduct" process, and three plants used a "nonrecovery" process in 2007. The following discussion addresses the more common byproduct process first and then describes the nonrecovery process along with the major differences between the two that affect emissions.

Figure 12.2-1 illustrates the major process equipment in a schematic diagram of a byproduct coke oven battery. Flow diagrams are provided in Figures 12.2-2 and -3 to give an overview of the process from coal preparation to byproduct recovery. These operations will be discussed in greater detail for the three major subprocesses: coal preparation and charging, thermal distillation and pushing, and byproduct recovery.

12.2.1.1 Coal Preparation And Charging For By-Product Coke Ovens -

The coal that is charged to the ovens is usually a blend of two or more low, medium, or high volatile coals that are generally low in sulfur and ash. Blending is required to control the properties of the resulting coke, to optimize the quality and quantity of by-products, and to avoid the expansion exhibited by types of coal that may cause excessive pressure on the oven walls during the coking process.

Coal is usually received on railroad cars or barges. Conveyor belts transfer the coal as needed to mixing bins where the various types of coal are stored. The coal is transferred from the mixing bins to the coal crusher where it is pulverized to a preselected size between 0.15 and 3.2 mm (0.006 and 0.13 in.). The desired size depends on the response of the coal to coking reactions and the ultimate coke strength that is required.

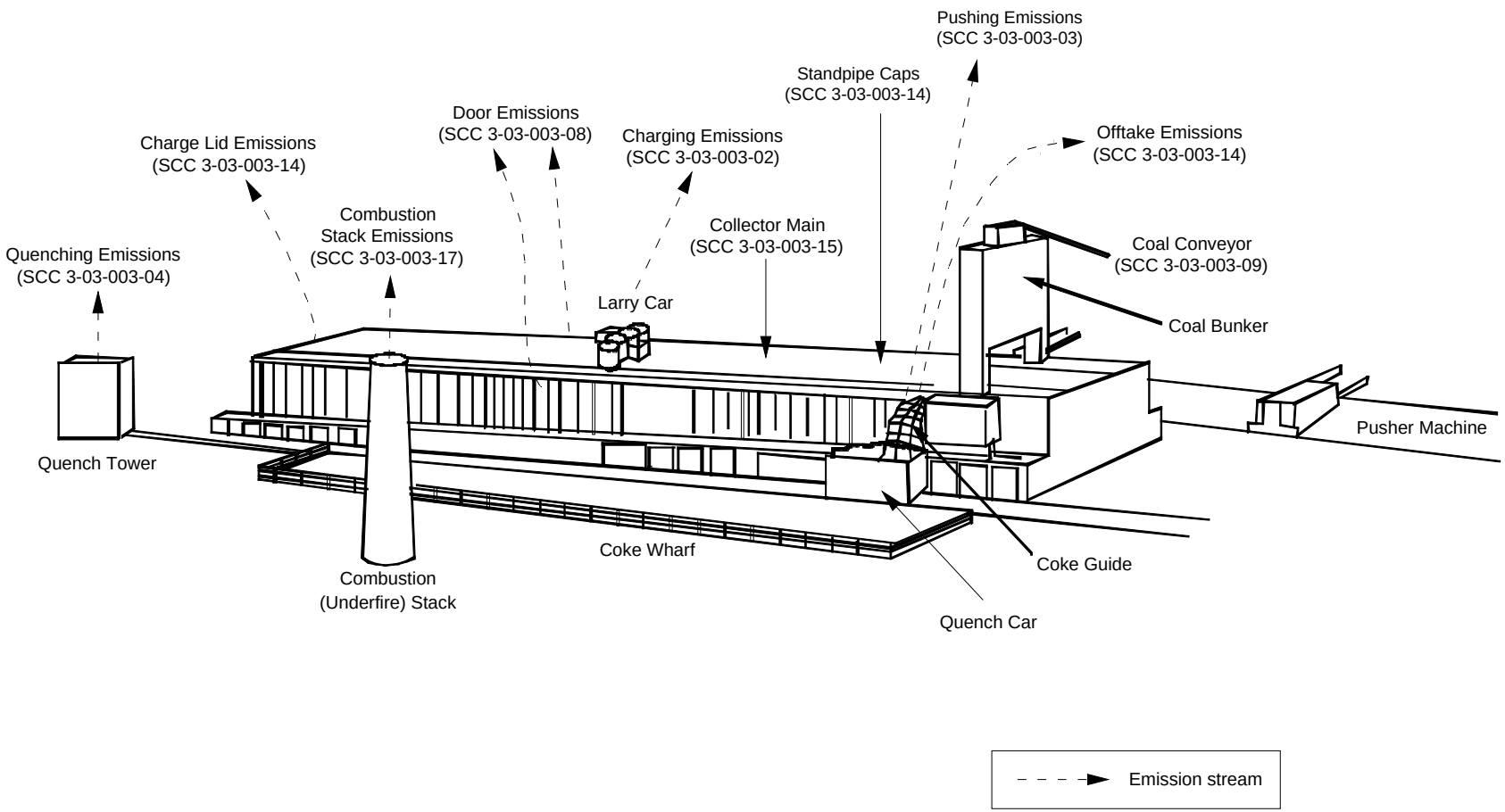

Figure 12.2-1. Byproduct coke oven battery showing major emission points.
(Source Classification Code in parentheses.)

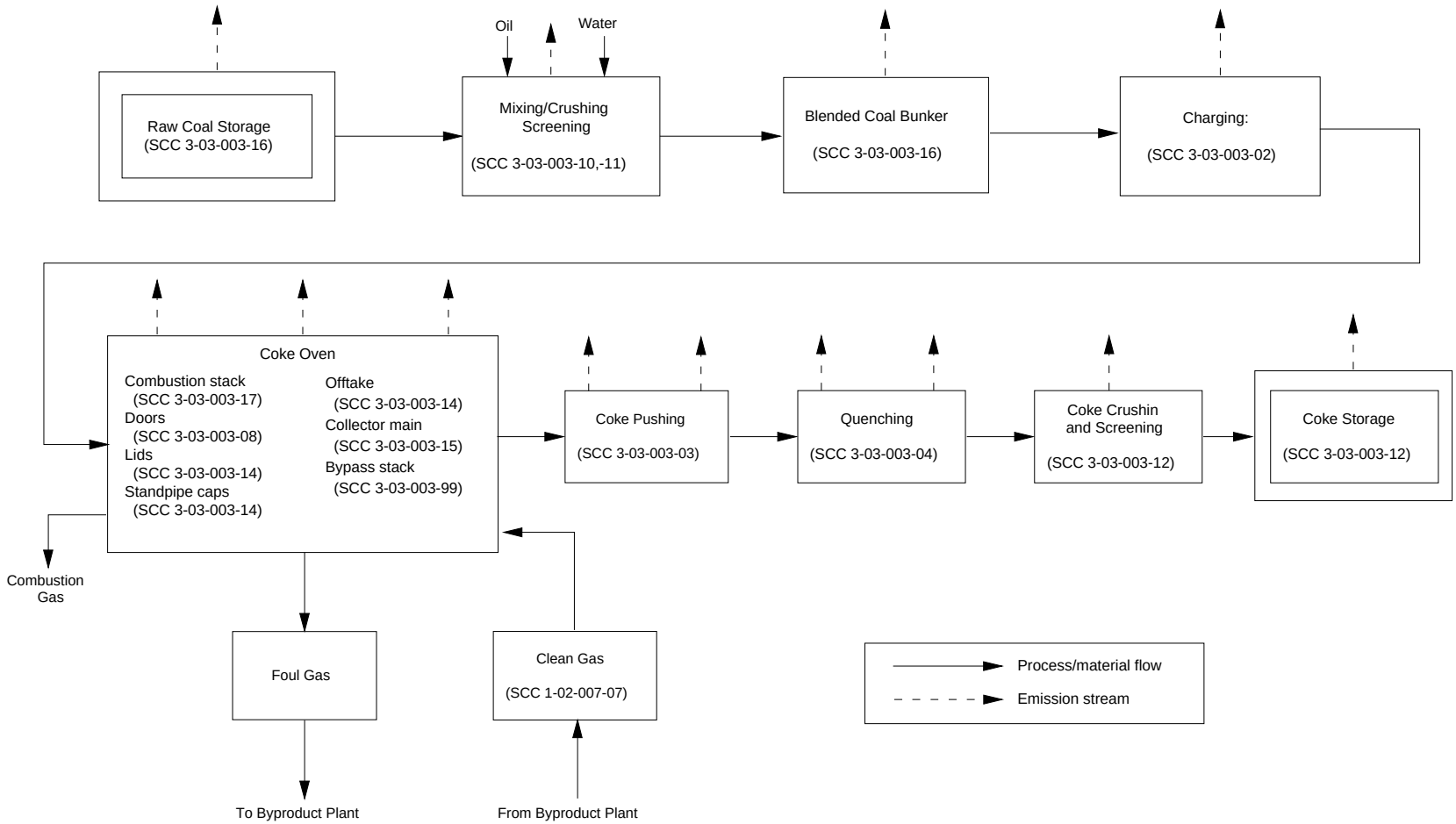

Coke Plant (SCC 3-03-003-31)

Figure 12.2-2. Flow diagram for byproduct coke production.
(Source Classification Code in parentheses.)

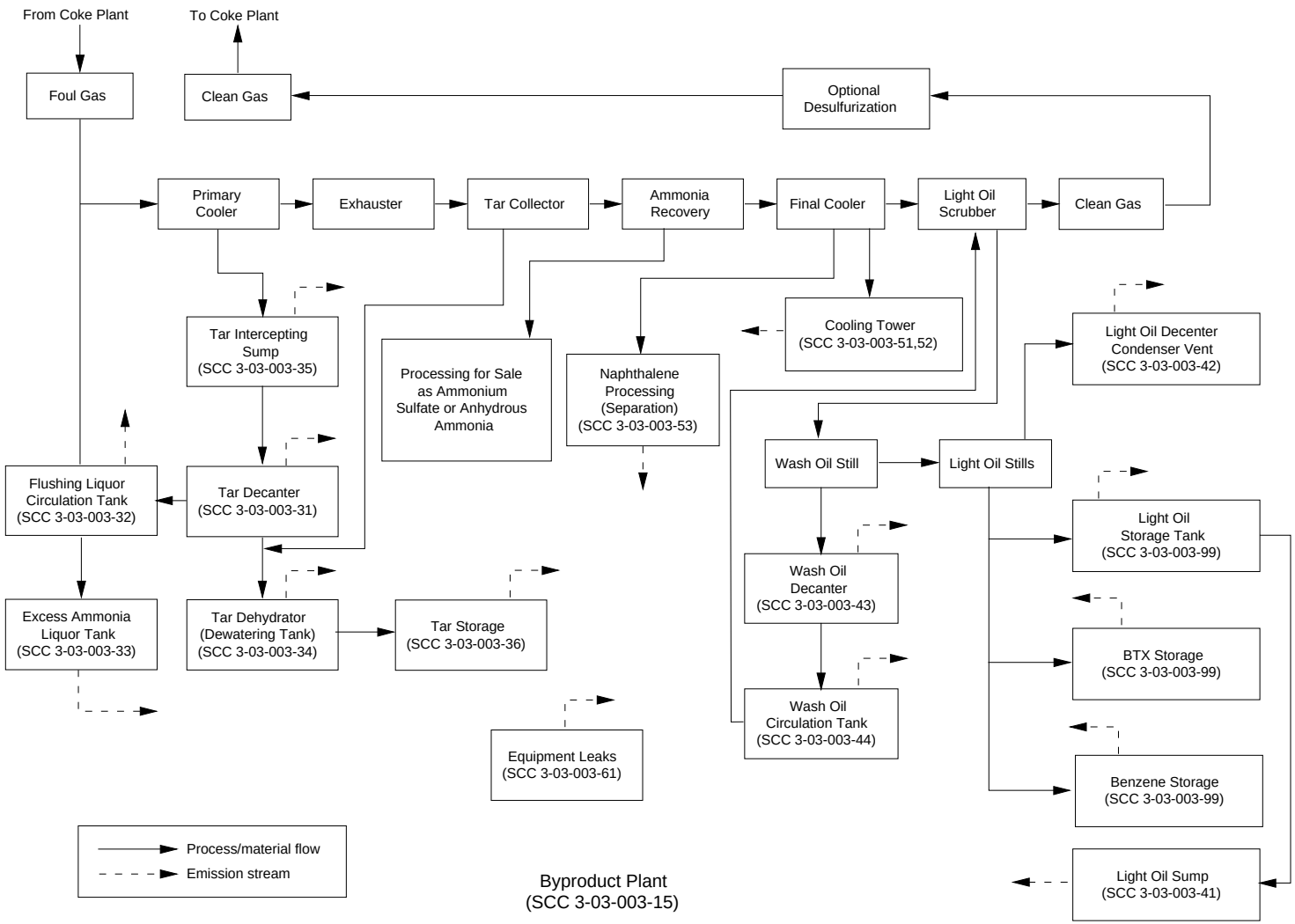

Figure 12.2-3. Flow diagram for coke byproduct recovery plant.
(Source Classification Code in parentheses.)

The pulverized coal is then mixed and blended, and sometimes water and oil are added to control the bulk density of the mixture. The prepared coal mixture is transported to the coal storage bunkers on the coke oven battery (see Figure 12.2-1). A weighed amount or specific volume of coal is discharged from the bunker into a larry car, which is the charging vehicle driven by electric motors that can travel the length of the battery on a wide gauge rail. The larry car is positioned over the empty, hot oven (called "spotting"), the lids on the charging ports are removed, and the coal is discharged from the hoppers of the larry car into the oven. To minimize the escape of gases from the oven during charging, steam aspiration is used at most plants to draw gases from the space above the charged coal into the collecting main.

The discharge of coal from the hoppers is "staged" by controlling the sequence in which each hopper is emptied to avoid peaks of coal that may block the space above the coal, which hinders the removal of gases generated during charging. Near the end of the charging sequence, peaks of coal in the oven are leveled by a steel bar that is cantilevered from the pusher machine through a small door on the side of the oven, called the leveler or "chuck" door. This leveling process aids in uniform coking and provides a clear vapor space and exit tunnel for the gases that evolve during coking to flow to the gas collection system. After the oven is charged with coal, the chuck door is closed, the lids are replaced on the charging ports and sealed ("luted") with a wet clay mixture, the aspiration is turned off, and the gases are directed into the offtake system and collecting main.

12.2.1.2 Thermal Distillation -

The thermal distillation takes place in groups of ovens called batteries. A battery consists of 20 to 100 adjacent ovens with common side walls that are made of high quality silica and other types of refractory brick. Typically, the individual slot ovens are 11 to 16.8 m (36 to 55 ft) long, 0.35 to 0.5 m (1.1 to 1.6 ft) wide, and 3.0 to 6.7 m (9.8 to 22 ft) high. The wall separating adjacent ovens, as well as each end wall, is made up of a series of heating flues. At any one time, half of the flues in a given wall will be burning gas while the other half will be conveying waste heat from the combustion flues to a "checker brick" heat exchanger and then to the combustion stack. Every 20 to 30 minutes the battery "reverses", and the former waste heat flues become combustion flues while the former combustion flues become the waste heat flues. This process avoids melting the battery brick work (the flame temperature is above the melting point of the brick) and provides more uniform heating of the coal mass.

The operation of each oven is cyclic, but the battery contains a sufficiently large number of ovens to produce an essentially continuous flow of raw coke oven gas. The individual ovens are charged and emptied at approximately equal time intervals during the coking cycle. Coking proceeds for 15 to 18 hours to produce blast furnace coke and 25 to 30 hours to produce foundry coke. The coking time is determined by the coal mixture, moisture content, rate of underfiring, and the desired properties of the coke. When demand for coke is low, coking times can be extended to 24 hours for blast furnace coke and to 48 hours for foundry coke. Coking temperatures generally range from 900° to 1100°C (1650° to 2000°F) and are kept on the higher side of the range to produce blast furnace coke. Air is prevented from leaking into the ovens by maintaining a positive back pressure in the collecting main of about 10 mm (0.4 in.) of water. The gases and hydrocarbons that evolve during the thermal distillation are removed through the offtake system and sent to the byproduct plant for recovery.

At the end of the coking cycle, doors on both ends of the oven are removed and the incandescent coke is pushed from the oven by a ram that is extended from the pusher machine. The coke is pushed through a coke guide into a special railroad car called a quench car. The quench car carries the coke to a quench tower where it is deluged with water to prevent the coke from burning after exposure to air.

12.2.1.3 Coke Handling And Storage -

The quenched coke is discharged onto an inclined coke wharf to allow the excess water to drain and to cool the coke to a reasonable handling temperature. Gates along the lower edge of the wharf control the rate of coke falling onto a conveyor belt, which carries the coke to a crushing and screening system. The coke is then crushed and screened to the proper size for the blast furnace operation. The sized coke is transported to a storage area where it is kept until ready for use or shipment.

12.2.1.4 Byproduct Collection -

For ovens not operating to current U. S. practices, gases evolved during coking leave the oven through the standpipes, pass into goosenecks, and travel through a damper valve into the gas collection main. Large exhausters are used to move the coke oven gases, which account for 20 to 35 percent by weight of the initial coal charge and are composed of water vapor, tar, light oils (primarily benzene, toluene, xylene), heavy hydrocarbons, and other chemical compounds. The raw coke oven gas exits the ovens at temperatures of 760° to 870°C (1400° to 1600°F) and is shock cooled by spraying recycled "flushing liquor" in the gooseneck. This spray cools the gas to 80° to 100°C (176° to 212°F), precipitates tar, condenses various vapors, and serves as the carrying medium for the condensed compounds. These products are separated from the liquor in a decanter and are subsequently processed to yield tar and tar derivatives.

The gas is then passed either to a final tar extractor or an electrostatic precipitator for additional tar removal. When the gas leaves the tar extractor, it carries three-fourths of the ammonia and 95 percent of the light oil originally present in the raw coke oven gas. The ammonia is recovered either as an aqueous solution by water absorption or as ammonium sulfate salt. Ammonium sulfate is crystallized in a saturator that contains a solution of 5 to 10 percent sulfuric acid, then the crystallized salt is removed, dried, and packaged for sale.

The gas leaving the saturator at about 60°C (140°F) is taken to final coolers or condensers, where it is typically cooled to about 24°C (75°F) and where condensed materials are removed (e. g., water, benzene, naphthalene). The gas then passes into a light oil (benzol) scrubber, which uses a heavy petroleum fraction called wash oil (or straw oil) as the scrubbing medium to absorb light oil. The wash oil absorbs about 2 to 3 percent of its weight in light oil and removes about 95 percent of the light oil from the gas. The rich wash oil is stripped in a steam stripper (still), which sends the light oil and water vapors overhead to a light-oil still and condenser for recovery. The lean (stripped) wash oil leaves the bottom of the stripping column and associated decanter and is recycled to the light oil scrubber. The light oil may be sold as crude or processed to recover benzene, toluene, xylene, and solvent naphtha.

After tar, ammonia, and light oil removal, the gas undergoes a final desulfurization at some plants to remove hydrogen sulfide. The cleaned coke oven gas has a heating value of approximately 20 MJ/Nm3 (550 Btu/scf) but may be as low as 17 MJ/Nm^3 (480 Btu/scf). Typically, 35 to 40 percent of the gas is returned to the battery as fuel for the combustion system and the remainder is used for other heating needs, is sold, or is flared in some cases.

Over the last two decades, typical U. S. practice has changed so that direct gas coolers are no longer used. Tar-bottom coolers, wash-oil coolers, or other indirect cooling takes the place of direct coolers. Open naphthalene processing is no longer practiced. The naphthalene remains in the tar and is sold with it. Instead of refining light oil in the byproduct plant, the oil is sold to independent refiners who may separate it into benzene, toluene, and xylene fractions for sale.

12.2.1.5 Nonrecovery Coke Production -

In 2007 there were three nonrecovery plants operating in the U. S. (in Vansant, Virginia, East Chicago, Indiana, and Haverhill, Ohio). As the name implies, this process does not recover the numerous chemical byproducts as discussed in the previous section. All of the coke oven gas is burned, and instead of recovery of chemicals, this process recovers the heat. The Vansant plant uses a portion of the hot gases to dry coal, and the other two plants produce steam and electricity.

Nonrecovery ovens are of a horizontal design (as opposed to the vertical slot oven used in the byproduct process) with a typical range of 30 to 60 ovens per battery. The oven is generally between 14.0 and 15.5 m (45 and 50 ft) long and 3.4 to 3.7 m (11 to 12 ft) wide. The internal oven chamber is usually semicylindrical in shape with the apex of the arch 1.5 to 3.7 m (5 to 12 ft) above the oven floor. Each oven is equipped with two doors, but there are no lids or offtakes as found on byproduct ovens. The oven is charged through the oven doorway with a coal conveyor rather than from the top through charging ports. Unlike byproduct ovens, expanding coals pose no problem to non-recovery technology nor do they limit potential coal usage.

After an oven is charged, carbonization begins as a result of the hot oven brick work from the previous charge. Combustion products and volatiles that evolve from the coal mass are burned in the chamber above the coal, in the gas pathway through the walls, and beneath the oven in sole flues. Each oven chamber has two to six downcomers in each oven wall, and the sole flue may be subdivided into separate flues that are supplied by the downcomers. The sole flue is designed to heat the bottom of the coal charge by conduction while radiant and convective heat flow is produced above the coal charge.

Primary combustion air is introduced into the oven chamber above the coal through one of several dampered ports in the door. The dampers are adjusted to maintain the proper temperature in the oven crown. Outside air may also be introduced into the sole flues; however, additional air usually is required in the sole flue only for the first hour or two after charging. Gas flow is a result of natural or induced draft, and the oven is maintained under a negative pressure. Consequently, the ovens typically do not leak as do the byproduct ovens maintained under a positive pressure. However, door leaks can occur if the pressure in the oven becomes positive because of a plugged uptake damper, fouling of the heat exchanger used for heat recovery, and other operating problems. The combustion gases are removed from the ovens and directed to the stack through a waste heat tunnel that is located atop the battery centerline and extends the length of the battery.

At the end of the coking cycle, each oven is inspected to assure coking is complete and that green coke will not be pushed. Since the oven is under negative pressure, a worker can open one of the damper ports on the oven, observe the coke mass, and verify that coking is complete (e.g., if no flames or smoke obscure the opposite end of the oven). This inspection procedure cannot be performed on byproduct coke batteries because they are operated under positive pressure.

Pushing and quenching operations are similar to those at byproduct coke oven batteries. One slight difference in pushing is that the height of fall of the hot coke is less for the nonrecovery oven because of its horizontal rather than vertical design. With respect to emissions, the major differences from conventional byproduct ovens are the operation under negative pressure that eliminates door, lid, and offtake leaks during coking and the absence of the byproduct recovery plant and its associated emission sources.

12.2.2 Emissions And Controls

Emissions from coke ovens include conventional pollutants (particulate matter [PM], sulfur dioxide [SO_2], nitrogen oxides [NO_x], etc.) and numerous organic compounds, including polycyclic organic matter (POM), volatile organic compounds (VOCs), and others. As portrayed in Figures 12.2-2 and -3, emissions originate from several operations at the coke plant and byproduct recovery plant. The following paragraphs describe emissions and controls characteristic of byproduct coke production, nonrecovery coke production, and byproduct recovery.

12.2.2.1 Byproduct Coke Production -

At the coke plant, PM is emitted from raw coal unloading, storage, and handling; mixing, crushing, and screening; blending; charging; leaks from doors, lids, and offtakes during coking; soaking; pushing coke from the oven; hot coke quenching; combustion stacks; and coke crushing, sizing, screening, handling, and storage. VOCs are emitted from coke oven leaks, coke pushing, and coke quenching. Sulfur dioxide, nitrogen oxides, and carbon monoxide are also emitted from coke oven leaks. Organic compounds soluble in benzene are the major constituents of the PM emissions and are also included as VOCs. Among the hazardous air pollutants (HAPs) included in the organic emissions are benzene, toluene, xylenes, cyanide compounds, naphthalene, phenol, and POM, all of which are contained in coke oven gas. Substantial emissions are also obtained from ancillary operations such as boilers, wastewater treatment, cooling towers, and roads. Emission factors for these operations are available in other parts of AP-42.

Controls for coke plants consist of operation and maintenance practices to reduce oven emissions, and application of control devices to specific operations in the coke-making and byproduct recovery processes. Operating and maintenance practices include steam aspiration and staged charging to reduce charging leaks, and sealing of doors, lids, and offtakes at joints that may leak. A control for pushing and coke-side door leaks is a shed constructed along the coke side of the battery. The shed is ducted to a PM control device, typically a baghouse. An alternate control for pushing is the use of a hooded quench car containing a scrubber or baghouse that controls PM emissions during pushing and transport to the quench area. Quenching is controlled by installing baffles in the quench tower to impede PM flow, and use of clean water for quenching. Combustion stack PM emissions are controlled by maintenance of the oven walls or devices such as electrostatic precipitators (ESPs) or baghouses. Gaseous emissions from the bleeder or bypass stack may be controlled with a flare. Coal and coke handling PM emissions may use cyclones or traveling hoods ducted to a baghouse for control.

Emissions from charging coal into the ovens are controlled by stage charging in which coal is discharged from the larry car hoppers in an ordered sequence that maintains an open tunnel head at the top of the oven to provide an exit space for the gas until the last hopper is emptied. An important aspect of stage charging is adequate aspiration, which is used to pull the gas generated during charging from the ovens into the regular gas handling equipment. Prior to stage charging, uncontrolled charges resulted in heavy clouds of emissions throughout the 3- to 5-minute charging time. Batteries are now controlled to a level that produces only a few seconds of visible emissions during the charge with resulting emissions that are less than those from battery leaks.

During the coking cycle, various types of pollutants are emitted from leaks on the battery, including leaks from doors, from lids that cover the charging ports, and from the offtake system. Because the oven is maintained under a positive pressure, these leaks occur from small openings, such as gaps where metal seals mate against some other part of the oven. Small gaps seal by the condensation of tar. Door leaks on most batteries are controlled by repairing and maintaining doors, door seals, and jambs to prevent large gaps between the metal seal and the jamb. The manual application of a supplemental

sealant such as sodium silicate is used at some plants to further reduce door leaks. A few batteries control door leaks by the external application of a luting material to provide a seal (called hand-luted doors). Lid leaks and offtake leaks are controlled by applying luting material around sealing edges to stop leaks and reluting when leaks are observed. The control of leaks requires a diligent work practice program that includes locating leaks and then identifying and correcting their cause.

Pushing coke into the quench car is a significant source of PM emissions. Most facilities control pushing emissions by using mobile scrubber cars with hoods, shed enclosures evacuated to a gas cleaning device, or traveling hoods with a fixed duct leading to a stationary gas cleaner. If the coke has been fully coked, emissions of benzene-soluble organics (BSO) and other organics are not expected to be significant; however, when coke that is still not fully coked (called "green" coke) is pushed, the various types of organic compounds found in coke oven gas are emitted. Emissions may also occur from "soaking" and decarbonizing when the oven is taken off the collecting main and the offtakes are opened to the atmosphere near the end of the coking cycle. There are few data available to characterize these emissions.

Coke quenching entrains PM from breakup of the hot coke when it is hit with water. The PM is carried up the quench tower by the velocity of the steam plume. In addition, suspended and dissolved solids from the quench water may become entrained in the steam plume rising from the tower. Trace organic compounds may also be present. As with pushing, other organic compounds may be released during the quenching of green coke. The typical control is to install baffles in the quench tower to reduce these emissions. Another "control" is to use clean water (recycled water that does not include process water) instead of "dirty" water (i. e., water high in solids or other pollutants) to quench the coke.

Combustion of gas in the battery flues produces emissions from the underfire or combustion stack. Sulfur dioxide emissions may also occur if the coke oven gas is not desulfurized to remove hydrogen sulfide. Even after desulfurization, substantial amounts of sulfur dioxides are emitted. In addition, coke oven gas may leak through damaged oven walls and mix with the combustion gases to increase emissions. Battery stack emissions are usually controlled by maintaining oven walls to avoid leakage and by maintaining good combustion conditions. Conventional gas cleaning equipment, including ESPs and fabric filters, have been installed on some battery combustion stacks.

Fugitive particulate emissions are associated with material handling operations. These operations consist of unloading, storing, grinding, and sizing of coals, as well as the screening, crushing, and storing of coke. Emissions from material transfers between conveyors and from screening and crushing operations thst are controlled by wet suppression techniques can be estimated using the procedures in Section 11.19.2. Emissions from material loading and unloading can be estimated using the procedures in Section 13.2.4.

For the purposes of presenting emission factors for coke oven charging, door leaks, lid leaks, and offtake leaks, emission control levels are categorized as uncontrolled, pre-national emission standard for hazardous air pollutants (NESHAP) controls, and post-NESHAP controls. Uncontrolled pertain to the control level that characterized coke ovens up to the 1980s; pre-NESHAP controls pertains to the level of control prior to the effective date of the NESHAP for coke ovens (40 CFR part 63, subpart L); and post-NESHAP controls refer to the level of control required by the NESHAP. Table 12.2-1 summarizes these control levels.

The emission factors available for byproduct coking operations for criteria pollutants, HAPs, and VOCs are given in Table 12.2-2, Table 12.2-3, Table 12.2-4, Table 12.2-5, Table 12.2-6, Table 12.2-7, Table 12.2-8, Table 12.2-9, Table 12.2-10, Table 12.2-11, Table 12.2-12, Table 12.2-13, Table 12.2-14, Table 12.2-15, Table 12.2-16, Table 12.2-17, and Table 12.2.-18. Table 12.2-19 presents particle size

information for coking operations; these particle-size data were obtained primarily in the 1970s and may not represent current practice.

With the exception of the factors for uncontrolled charging and uncontrolled door leaks, the emission factors for leaks and charging given in Table 12.2.2 are based on an average or typical battery. These emission factors may be useful if site-specific information (other than capacity) is not available for the battery. The preferred approach for a specific battery is to use the actual number of emission points on the battery and historical data for control of visible emissions, such as the annual average percent of the doors that leak. This emission estimating approach for batteries with low levels of visible leaks (5 percent leaking doors or offtakes and 1 percent leaking lids) is outlined below for BSO emissions; emissions of other pollutants can be estimated by the ratio of the pollutant to BSO as presented in Table 12.2-4.

Door leaks

$$E_D = [PLD/100 \times N_D \times 0.019] + [F_b \times N_D \times 0.011] + [(1- F_b - (PLD/100)) \times N_D \times 0.002]$$

where

E_D = BSO emission rate, kg/hr;
PLD = average percent leaking doors as determined by EPA Method 303;
N_D = total number of doors on battery,
0.019 = typical door leak rate for doors that from the yard have visible leaks, kg/hr,
F_b = fraction of doors with visible leaks from the bench but not the yard (use a default value of 0.06 in the absence of battery-specific observations of door leaks from the bench),
0.011 = typical door leak rate for doors that from the bench have visible leaks, kg/hr; and
0.002 = door leak rate for doors without visible leaks, kg/hr.

Similarly, estimations can be made for lid leaks as follows:

$$E_L = PLL/100 \times N_L \times 0.0033$$

where

EL = BSO emission rate, kg/hr;
PLL = average percent leaking lids;
NL = total number of lids on battery; and
0.0033 = typical lid leak rate, kg/hr.

Offtake leaks can be estimated using the same equation as for lid leaks and an emission rate of 0.0033 kg/hr per offtake leak.

Charging

$$E_C = N_T/T \times 0.0042 \times (VE \div 10)$$

where

E_C = BSO emission rate, kg/hr;
N_T = total number of ovens on battery;
T = coking cycle time, hr;
0.0042 = typical emission rate per charge, kg/charge; and
VE = average seconds of visible emissions per charge.

Nonrecovery Coke Production — For the nonrecovery process, emissions from pushing and quenching are expected to be similar in composition and quantity to those from by-product cokemaking. There are no emissions from leaking doors because the ovens are maintained under a negative pressure. There are no charging port lids or coke oven gas offtakes on the nonrecovery batteries. Some emissions occur when the coal is charged into the oven by a drag conveyor, and these emissions are usually minimized by maintaining a high draft on the oven and charging as quickly as possible. All of the nonrecovery batteries have been equipped with a capture hood positioned over the open door through which the coal is charged. During charging, emissions are captured by the hood and sent to a fabric filter (baghouse) for cleaning. Green pushes are prevented by observing the coke mass through one of the damper ports on the oven door prior to pushing and verifying that the opposite end of the oven is not obscured by flames or smoke. One nonrecovery plant is equipped with a shed that serves as a settling chamber for pushing emissions, one has a shed that is evacuated to a fabric filter, and one is equipped with a moveable hood vented to a multiclone.

Emissions also occur from the combustion stack of nonrecovery batteries. These emissions include PM, SO_2, NO_x, and other compounds typical of combustion gas. Two of the nonrecovery plants have controls for these pollutants, including a fabric filter for PM, lime injection dry scrubber for SO_2,and staged combustion for NO_x. Significant levels of volatile organics and BSO have not been found, probably due to the high combustion temperatures, adequate oxygen, and a residence time of several seconds in the combustion system. Tables 12.2-20 present the emission factors for nonrecovery coking combustion stacks. Table 12.2-21 presents emission factors for nonrecovery charging.

By-Product Recovery — Emissions from the by-product recovery plant are primarily organic vapors such as benzene and other light aromatics, POM, cyanides, phenols, and light oils. These emissions occur from the separation processes, process vents, and transfer operations for recovered intermediates or products. These emissions also occur from wastewater that has contacted either the coke-oven gas or is generated from separation processes when the water is handled in open wastewater treatment systems. Although not a criteria pollutant or HAP, ammonia (a particulate precursor) also is emitted from the excess ammonium liquor tank, tar decanter, and flushing liquor tank. Many plants control these emissions using gas blanketing or vapor balance/recovery techniques that collect the organic vapors and contain them within the gas handling system where they are eventually recovered. Some plants use carbon adsorbers to capture emissions, such as those from vents on storage tanks. Emission factors for furnace and foundry by-product recovery plants are given in Table 12.2-22. Additional emission factors for by-product plants are presented in Table 12.2-23 and Table 12.2-24. Emissions from some storage tanks may also be estimated from EPA's TANKS model as noted in Table 12.2-22 and 12.2.23. However, TANKS is not appropriate for other sources such as process vessels because of factors such as dissolved gases in liquids and hot liquids. For estimating emissions for regulatory purposes, facilities can always use their own data as long as they are acceptable to the Administrator. For facilities that have an effective leak detection and repair (LDAR) program, and that have screening values required by EPA's *Protocol for Equipment Leak Emission Estimates* (EPA-453/R-95-017), EPA believes the correlation approach for refineries described therein is appropriate. However, for facilities not having an LDAR program and screening values, the emission factors in Table 12.2-24 may be used. The factors are applied to each piece of equipment for the conditions listed in the table, and represent the daily quantity of VOC emissions.

12.2.3 Updates Since The Fifth Edition

Revisions to this section since the Fifth Edition release in January 1995 are summarized below.

Supplement F, April 2000

- Units for the emission factors provided in Tables 12.2-1 and 12.2-3 have been changed from kg of pollutant/Mg of coke produced to kg of pollutant/Mg of coal charged. None of the numerical values were changed. Units for the emission factors provided in Tables 12.2-2 and 12.2-4 have been changed from lb of pollutant/ton of coke produced to lb of pollutant/ton of coal charged. None of the numerical values were changed.

- The October 1986 version of this section reported the emission factor units as lb of pollutant/ton of coal charged (kg of pollutant/Mg of coal charged). The January 1995 revision of this section did not change the numerical value for any of the emission factors but, due to a formatting error, the units were mistakenly reported as lb of pollutant/ton of coke produced (kg of pollutant/Mg of coke produced). Thus the revisions noted above correct errors to the January 1995 revision of this section.

September, 2000

- In Table 12.2-4, the PM factors in Metric units were incorrectly transcribed into the English unit table. This has been corrected. The PM factors in Table 12.2-4 now accurately reflect the English unit factors from the Fourth Edition. Some additional SCC codes were also added for the combustion stack and for oven charging. More errors were found and corrected in Table 12.2-1. The PM factor for uncontrolled combustion stack with an ESP (BFG) was corrected to “ND”, and the PM factor for the same unit with ESP (COG) was corrected to 0.055 kg/MG of coal charged. The PM factors in all of the tables were labeled “filterable” to make the terminology consistent with the present day convention.

July 2007

- All emission factors were revised and new factors were added.

- The emission factor for hydrochloric acid (HCl) emissions from the battery combustion stack was added to Table 12.2-16 as a draft factor under review.

Table 12.2-1. TYPICAL EMISSION CONTROL LEVELS FOR CHARGING AND DOOR, LID, AND OFFTAKE LEAKS [a]

Source	Uncontrolled	Pre-NESHAP Controls [b]	Post-NESHAP Controls [b]
Charging (SCC 3-03-003-02)	3 to 5 minutes/charge [c]	Stage charging, 25 to 30 seconds/charge, 44 g BSO/charge	Stage charging, steam aspiration, 10 seconds/charge, 5 g BSO/charge
Door leaks (SCC 3-03-003-08)	29 to 70 percent leaking (average 50 percent) [d]	10 percent leaking	4 percent leaking
Lid leaks (SCC 3-03-003-14)	25 percent leaking [b]	3.5 percent leaking	0.3 percent leaking
Offtake leaks (SCC 3-03-003-14)	50 percent leaking [b]	6.5 percent leaking	2.0 percent leaking

[a] SCC = Source Classification Code.
[b] Reference 9.
[c] References 4, 12-13.
[d] References 1-4.

Table 12.2-2 (Metric And English Units).
TYPICAL EMISSION FACTORS FOR COKE PRODUCTION: OVEN LEAKS AND CHARGING[a]
EMISSION FACTOR RATING: E

Source[b]	Total PM[c]		BSO[d]	
	kg/Mg	lb/ton	kg/Mg	lb/ton
Charging				
(SCC 3-03-003-02)				
Uncontrolled[e]	0.60	1.2	0.44	0.88
Scrubber[f]	0.0070	0.014	ND	ND
Pre-NESHAP controls[g]	0.0058	0.011	0.0027	0.0053
Post-NESHAP controls[g, h]	0.00053	0.00113	0.00025	0.00050
Door leaks				
(SCC 3-03-003-08)				
Uncontrolled[j]	0.26	0.52	0.43	0.86
Pre-NESHAP controls[g, k]	0.020	0.041	0.018	0.037
Post-NESHAP controls[g, h]	0.0079	0.016	0.0071	0.014
Lid leaks[g]				
(SCC 3-03-003-14)				
Uncontrolled	0.047	0.094	0.023	0.046
Pre-NESHAP controls	0.0065	0.013	0.0032	0.0065
Post-NESHAP controls[h]	0.000086	0.00018	0.000044	0.000087
Offtake leaks[g]				
(SCC 3-03-003-14)				
Uncontrolled	0.047	0.094	0.023	0.046
Pre-NESHAP controls	0.0059	0.012	0.0030	0.0060
Post-NESHAP controls[h]	0.00029	0.00058	0.00015	0.00029

[a] Emission factor units are kg/Mg and lb/ton of coal charged unless otherwise specified. SCC = Source Classification Code. ND = no data.
[b] Refer to Table 12.2-1 for summary of uncontrolled, pre-NESHAP, and post-NESHAP control levels.
[c] Total PM includes both filterable and condensable PM. Based on 1.8 times BSO for lid and offtake leaks and 1.7 times BSO for charging from Table 12.2-4. Total PM for door leaks is based on test data referenced in the footnotes.
[d] BSO = benzene soluble organics.
[e] References 7-8, 11.
[f] Reference 11.
[g] Based on the model battery described in Reference 9 charging 492,000 Mg/yr of coal, the visible emission levels given in Table 12.2-1, and the equations in the text.
[h] For low levels of visible emissions, site-specific estimates of current emissions should be based on battery-specific data on the average number of leaks and seconds of visible emissions from charging and the equations in Section 12.2.2.1. The default emission factors for post-NESHAP control are based on 4 percent leaking doors, 0.3 percent leaking lids, 2 percent leaking offtakes, and 10 seconds of visible emissions per charge.
[j] References 1-4 for PM, References 3, 5 for BSO.
[k] Reference 166 for Filterable PM; emission factor units converted from lb/ton of coke pushed using a factor of 0.69.

Table 12.2-3. EMISSION FACTORS FOR COKE PRODUCTION:
DOOR LEAKS--SO_2, NO_x, TOC, CO [a]
EMISSION FACTOR RATING: E

Operation	SO_2		NO_x		TOC (as propane)		CO	
	kg/Mg	lb/ton	kg/Mg	lb/ton	kg/Mg	lb/ton	kg/Mg	lb/ton
Door leaks (SCC 3-03-003-08) Controlled[b]	0.020	0.039	0.0007	0.0013	0.0028	0.0055	0.011	0.021

[a] Reference 166. Emission factor units are pre mass of coal charged, converted from mass of coke pushed using a factor of 0.69. SCC = Source Classification Code.
[b] Pre-NESHAP control.

Table 12.2-4. RATIOS OF OTHER POLLUTANTS TO BSO
EMISSION FACTOR RATING: E

Pollutant	Ratio to BSO [a]	Derived from reference No.
Filterable PM (lid and offtake leaks) [b]	0.9	3
Filterable PM (charging) [b]	0.8	12,13
Condensable PM (lid and offtake leaks) [c]	0.9	3
Condensable PM (charging) [c]	0.9	13
VOC [d]	2.2	10
TOC [e]	5.2	10
Acetylene	0.009	10
Acenaphthylene	0.032	11 [f], 182
Ammonia	0.15	10
Anthracene	0.00001	11 [f]
Benzene	0.5	10
Benzo[a]anthracene	0.00903	183
Benzo(a)fluorine	0.009	182
Benzo[a]pyrene	0.00836	183
Benzo[b]flouranthene	0.00680	183
Benzofuran	0.00007	11 [f]
Benzo(ghi)fluoranthene	0.005	182
Benzo[h]quinoline	0.002	182
Benzo[k]fluoranthene	0.00586	183
Benzonitrile	0.00002	11 [f]
Benzopyrenes	0.15	182
Benzoperylenes	0.054	182
Benzothiophene	0.005	11 [f], 182
Biphenyl	0.0045	182
Butadiene	0.009	11 [f]

Table 12.2-4. (continued)

Pollutant	Ratio to BSO [a]	Derived from reference No.
Butane	0.02	10
Butene	0.07	10
Carbanzole	0.022	
Carbon dioxide	0.5	10
Carbon disulfide	0.001	11 [f]
Carbon monoxide	1.1	10
Carbonyl sulfide	0.001	11 [f]
Crysene	0.01113	183
4H-Cyclopenta phenanthrene	0.016	182
Dibenzoanthacene	0.012	182
Dibenz[a,h]anthracene	0.000517	183
Dibenzothiophene	0.0055	182
Dibenzofuran	0.018	11 [f], 182
Dimethyl phenol	9.0×10^{-6}	11 [f]
Dimethylbiphenyls	0.0090	182
Dimethylnaphthalenes	0.0030	182
Ethane	0.3	10
Ethylene	0.4	10
Ethylmethyl benzene	0.002	11 [f]
Fluoranthene	0.032	11 [f], 182
Fluorene	0.017	11 [f], 182
Heavy hydrocarbons	0.8	10
Hexanoic acid dioctylester	0.00002	11 [f]
Hydrogen cyanide	0.035	10, 11 [f]
Hydrogen chloride	0.0009	11 [f]
Hydrogen fluoride	5.0×10^{-6}	11 [f]
Nitric acid	0.00007	11 [f]
Sulfuric acid	0.0007	11 [f]
Hydrogen sulfide	0.15	10
Indeno[1,2,3-cd]pyrene	0.00374	183
Metals		
arsenic	2×10^{-7}	11 [f]
mercury	2×10^{-7}	11 [f]
selenium	2×10^{-7}	11 [f]
Methane	2.7	10
Methylbenzoanthralenes	0.00275	182
Methylethyl benzene	0.003	11 [f]
Methyl naphthalene	0.0002	11 [f]

Table 12.2-4. (continued)

Pollutant	Ratio to BSO [a]	Derived from reference No.
Methylphenanthrene	0.010	182
2-methyl phenol	0.00007	11 [f]
4-methyl phenol	0.0002	11 [f]
Methylpyrenes	0.0155	182
Naphthalene	0.2	10
Pentene	0.01	10
Phenanthrene	0.075	11 [f], 182
Propane	0.03	10
Phenol	0.0006	11 [f]
Phenylnaphthalene	0.004	182
Propylene	0.08	10
Propyne	0.003	11 [f]
Propanenitrile	9.0×10^{-6}	11 [f]
Propynyl benzene	0.00002	11 [f]
Pyrene	0.033	11 [f], 182
Pyridine	0.0002	11 [f]
Solvents	0.02	10
Tar acids	0.02	10
Tar bases	0.01	10
Tar oil	0.02	10
Terphenyl	0.002	182
Thiophenes	0.003	11 [f]
Toluene	0.04	10
Trimethyl benzene	0.00005	11 [f]
Xylene	0.005	10

[a] Benzene soluble organics (BSO) in this table includes heavy hydrocarbons, tar acids, tar bases, tar oil, and naphthalene. BSO is a component of filterable PM, Condensable PM, VOC, and TOC. These ratios are applicable only to oven charging and door/topside leaks, not pushing.

[b] Filterable PM is that PM collected on or before the filter of an EPA Method 5 (or equivalent) sampling train.

[c] Condensable PM is that PM collected in the impingers portion of a PM sampling train.

[d] VOC includes all organic compounds in this table except methane and ethane.

[e] TOC = total organic compounds as measured using EPA Method 25A (or equivalent) sampling train; includes all organic compounds in this table.

[f] Reference 11 assumes 12,000 scf of coke oven gas/ton of coal..

Table 12.2-5 (English Units).
EMISSION FACTORS FOR COKE PRODUCTION: BYPASSED COKE OVEN GAS[a]
(SCC 3-03-003-99)
EMISSION FACTOR RATING: E

Pollutant	Uncontrolled	Flared
Benzene soluble organics (BSO)	44	ND
Filterable PM[b]	40	ND
Condensable PM[c]	40	ND
Carbon monoxide	48	4.8
Carbon dioxide	21	780
Hydrogen sulfide	6.6	0.10
Ammonia	6.5	0.065[d]
Hydrogen cyanide	2.1	0.021[d]
Heavy hydrocarbons	35	1.7
Sulfur dioxide	0	13
Methane	120	1.2[d]
Ethane	12	0.12[d]
Propane	1.1	0.010[d]
Butane	0.70	0.0070[d]
Ethylene	17	0.17[d]
Propylene	3.5	0.035[d]
Butene	2.9	0.029[d]
Pentene	0.60	0.0060[d]
Benzene	22	0.22[d]
Toluene	1.9	0.019[d]
Xylene	0.20	0.0020[d]
Acetylene	0.40	0.0040[d]
Tar acids (CxHxOH)	0.70	0.0070[d]
Tar bases (CxHxN)	0.50	0.0050[d]
Solvents	0.70	0.0070[d]
Naphthalene	7.0	0.07[d]
Tar oil	1.0	0.010[d]

[a] Reference 10. SCC = Source Classification Code. ND = no data. Factor units are lb/ton of coal charged and are used to estimate emissions of bypassed coke oven gas that is vented directly to atmosphere or flared as required by the NESHAP. To estimate total emissions per episode, multiply emission factor by average coal usage rate (ton/hr) and duration of venting episode in hours. To obtain emission factor units of kg/Mg of coal charged, multiply table values by 0.5.

[b] Filterable PM is that PM collected on or before the filter of an EPA Method 5 (or equivalent) sampling train.

[c] Condensable PM is that PM collected in the impingers portion of a PM sampling train.

[d] Emissions after flaring are considered as “trace”. The factors are based on an assumed 99 percent destruction.

Table 12.2-6 (Metric And English Units).
EMISSION FACTORS FOR FILTERABLE PM EMISSIONS FROM COKE OVEN PUSHING [a]
(SCC 3-03-003-03)

Process	EMISSION FACTOR RATING	Emissions, kg/Mg	Emissions, lb/ton
Uncontrolled[b]	D	0.695	1.39
With Hood and FF control [c]	B	0.19	0.37
With Hood and scrubber [d]	A	0.19	0.38
With Shed and FF [e]	B	0.20	0.39

[a] Expressed as kg/Mg and lb/ton of coal charged and includes both fugitive uncaptured emissions plus emissions from the control device. Based upon an average capture efficiency of 74.1%. Facilities with test data on the frequency and relative greenness of coke pushed may calculate controlled emissions based upon site specific capture efficiency as described in Reference 209.
[b] References 1 - 2, 192 - 193. Based upon Reference 1, PM-10 is 46% and PM-2.5 is 23% of filterable PM.
[c] References 112, 121, 135, 143, 148 - 150, 153, 155, 161, 165, 170,192 - 193.
[d] References 19 - 21, 40 - 44, 48, 93 - 97, 100 - 103, 119 - 120, 124 - 126, 128, 130, 144, 147, 162 - 164.
[e] References 46 - 47, 66 - 67, 69, 72 - 75, 105, 110 - 111, 166, 168, 171. Based upon References 166 and 168, PM-10 is 62% of filterable PM.

Table 12.2-7 (Metric And English Units).
EMISSION FACTORS FOR CONDENSABLE PM EMISSIONS FROM COKE OVEN PUSHING [a]
(SCC 3-03-003-03)

Process	EMISSION FACTOR RATING	Condensable Inorganic Emissions		Condensable Organic Emissions [b]	
		kg/Mg	lb/ton	kg/Mg	lb/ton
With Hood and FF control [c]	E	0.036	0.073	0.011	0.021
With Hood and scrubber [d]	D	0.0094	0.019		

[a] Expressed as kg/Mg and lb/ton of coal charged as measured by EPA Method 202. Based upon an average capture efficiency of 74.1%. Facilities with test data on the frequency and relative greenness of coke pushed may calculate controlled emissions based upon site specific capture efficiency as described in Reference 209.
[b] References 1, 112. When data on visible emissions are available, Condensable Organic Emissions may be calculated using the procedure for Extractable Organic Particulate.
[c] Condensable Inorganic References 112, 148.
[d] References 20 - 21, 48, 100 - 103.

Table 12.2-8 (Metric And English Units).
EMISSION FACTORS FOR EXTRACTABLE ORGANIC PARTICULATE (EOM)
FROM COKE OVEN PUSHING [a] (SCC 3-03-003-03)

Process	EMISSION FACTOR RATING	Emissions kg/Mg	Emissions lb/ton
Uncontrolled	E	4.30e-03	8.59e-03
With Hood and FF	E	4.21e-03	8.41e-03

[a] Expressed as kg/Mg and lb/ton of coal charged. As measured by EPA Method 315. Based upon an average capture efficiency of 74.1%. References 192 - 193. Estimates of extractable organic particulate may be made based upon the frequency and relative greenness of coke pushed. Based upon an analysis in Reference 194, the EOM emission factor for non green pushes is 0.0024 lb/ton, for moderately green pushes is 0.067 lb/ton and for severely green pushes is 2.3 lb/ton. A non-green push is defined as one with an average opacity less than 30%, moderately green is 30% to less than 50%, and severely green is 50% or greater. For batteries that have capture and control, capture efficiencies are assumed to be 90% for non-green, 40% for moderately green, and 10% for severely green pushes. Control efficiencies in References 192 - 193 for the captured emissions ranged from zero to 57% and averaged 27%.

Table 12.2-9 (Metric And English Units).
EMISSION FACTORS FOR CO, CO2, NOX, SOX, TOC AND ORGANIC COMPOUNDS FROM COKE OVEN PUSHING [a] (SCC 3-03-003-03)

Pollutant	EMISSION FACTOR RATING	Emissions, kg/Mg	Emissions, lb/ton
Carbon Monoxide [b]	D	0.032	0.063
Carbon Dioxide [c]	A	8.00	16.0
Nitrogen Oxides [d]	D	0.0097	0.019
Sulfur Oxides [e]	E	0.049	0.098
Total Organic Compounds [f]	E	0.050	0.100
Acetone [g]	E	0.012	0.023
VOC [h]	E	0.038	0.077
Ammonia [k]	E	0.006	0.012
Cyanide [k]	E	3.21e-04	6.41e-04
Phenol [k]	E	3.37e-03	6.73e-03
Benzene [k]	E	0.016	0.032
Toluene [g]	E	2.51e-05	5.02e-05
Styrene [g]	E	2.43e-05	4.85e-05
1,1,2,2-Tetrachloroethane [g]	E	3.91e-05	7.81e-05
Methanol [g]	E	4.12e-03	8.23e-03
Ethanol [g]	E	4.19e-05	8.38e-05
Isopropanol [g]	E	5.45e-05	1.09e-04
Acrolein [g]	E	5.10e-05	1.02e-04
Acetonitrile [g]	E	4.64e-05	9.27e-05
Acrylonitrile [g]	E	2.29e-04	4.57e-04
Vinyl Acetate [g]	E	7.85e-05	1.57e-04
Tetrahydrofuran [g]	E	6.55e-05	1.31e-04
1,4-Dioxane [g]	E	8.00e-05	1.60e-04
2-Butanone [g]	E	6.55e-05	1.31e-04
Methyl Methacrylate [g]	E	9.10e-05	1.82e-04
4-Methyl-2-Pentanone [g]	E	9.10e-05	1.82e-04
Methylene Chloride [g]	E	4.05e-06	8.10e-06

[a] Expressed as kg/Mg and lb/ton of coal charged. Based upon an average capture efficiency of 74.1%.
[b] References 16, 166, 168, 170.
[c] References 93 - 97, 100 - 103, 124 - 126, 128, 130, 144, 14 - 148, 155, 161, 165, 168, 170 - 171, 192 - 193.
[d] References 16, 166, 170.
[e] References 16, 166.
[f] References 166, 168, 170.
[g] Reference 207. Emission factor should be considered an underestimate since sample collection was by Summa canister.
[h] VOC is TOC minus Acetone.
[k] Ratio of benzene to TOC from Reference 168 (0.32) times the emission factor for TOC.

Table 12.2-10 (Metric And English Units).
EMISSION FACTORS FOR METALS FROM COKE OVEN PUSHING [a] (SCC 3-03-003-03)

Metal	EMISSION FACTOR RATING	Uncontrolled		Controlled Emissions [b]	
		kg/Mg	lb/ton	kg/Mg	lb/ton
Antimony	E	7.05e-07	1.41e-06		
Arsenic	E	1.75e-05	3.50e-05	4.69e-06	9.37e-06
Barium	E	1.96e-05	3.92e-05	7.15e-06	1.43e-05
Beryllium	E	3.32e-07	6.63e-07	1.03e-07	2.05e-07
Cadmium	E	1.92e-07	3.84e-07	7.85e-08	1.57e-07
Chromium	E	5.70e-06	1.14e-05	2.49e-06	4.98e-06
Cobalt	E	1.02e-06	2.04e-06	5.80e-07	1.16e-06
Copper	E	9.85e-06	1.97e-05	3.83e-06	7.65e-06
Manganese	E	1.49e-05	2.97e-05	5.15e-06	1.03e-05
Mercury	E	1.69e-07	3.38e-07		
Lead	E	2.74e-05	5.48e-05	7.65e-06	1.53e-05
Nickel	E	2.00e-05	3.99e-05	5.60e-06	1.12e-05
Phosphorus	E	3.10e-05	6.19e-05	1.39e-05	2.78e-05
Selenium	E	4.50e-06	9.00e-06	1.30e-06	2.59e-06
Silver	E	1.27e-07	2.54e-07	1.27e-07	2.53e-07
Thallium	E	1.15e-06	2.29e-06	3.29e-07	6.57e-07
Zinc	E	5.15e-05	1.03e-04	1.74e-05	3.47e-05

[a] Expressed as kg/Mg and lb/ton of coal charged. References 192 - 193. Based upon an average capture efficiency of 74.1%. Facilities with test data on the frequency and relative greenness of coke pushed may calculate controlled emissions based upon site specific capture efficiency as described in Reference 209. Emission factor should be considered an underestimate since sample analysis was performed on only the residual material following EPA Method 315 solvent extraction.

Table 12.2-11 (Metric And English Units).
EMISSION FACTORS FOR POLYCYCLIC AROMATIC HYDROCARBONS
FROM COKE OVEN PUSHING [a] (SCC 3-03-003-03)

PAH Compound	EMISSION FACTOR RATING	Uncontrolled		Controlled Emissions	
		kg/Mg	lb/ton	kg/Mg	lb/ton
Naphthalene	E	5.50e-04	1.10e-03 [b]	5.50e-04	1.10e-3 [c]
2-methylnaphthalene	E	2.09e-05	4.18e-5	1.78e-05	3.55e-5 [d]
Acenaphthylene	E	3.88e-04	7.75e-04 [e]	2.33e-04	4.65e-4 [c]
Acenaphthene	E	3.72e-06	7.44e-6	1.82e-06	3.64e-6 [c]
Fluorene	E	1.05e-04	2.11e-04 [f]	1.16e-04	2.32e-4 [c]
Phenanthrene	E	3.87e-04	7.74e-04 [g]	2.09e-04	4.18e-4 [c]
Anthracene	E	4.86e-05	9.71e-05 [h]	5.05e-05	1.01e-4 [c]
Fluoranthene	E	1.72e-04	3.44e-04 [k]	1.14e-04	2.27e-4 [c]
Pyrene	E	3.83e-04	7.66e-04 [m]	1.92e-04	3.83e-4 [c]
Benzo(a)anthracene	E	9.75e-05	1.95e-04 [n]	7.80e-06	1.56e-5 [c]
Crysene	E	8.75e-06	1.75e-5	3.68e-06	7.35e-6 [c]
Benzo(b)fluoranthene	E	5.25e-06	1.05e-5	1.55e-06	3.10e-6 [c]
Benzo(k)fluoranthene	E	2.82e-06	5.64e-6	1.63e-06	3.26e-6 [c]
Benzo(e)pyrene	E	2.04e-06	4.07e-6	5.60e-07	1.12e-6
Benzo(a)pyrene	E	1.50e-06	3.00e-6	5.55e-07	1.11e-6 [c]
Perylene	E	2.62e-07	5.23e-7	6.95e-08	1.39e-7 [c]
Indeno(1,2,3-cd)pyrene	E	3.12e-06	6.24e-6	9.95e-07	1.99e-6 [c]
Dibenzo(a,h)anthracene	E	8.15e-07	1.63e-6	5.75e-07	1.15e-6 [c]
Benzo(ghi)perylene	E	2.98e-06	5.95e-6	9.55e-07	1.91e-6 [c]

[a] Expressed as kg/Mg and lb/ton of coal charged. References 192 - 193 except where noted. Based upon an average capture efficiency of 74.1%. Facilities with test data on the frequency and relative greenness of coke pushed may calculate controlled emissions based upon site specific capture efficiency as described in Reference 209.
[b] Based upon controlled emission factor and 50% average control efficiency from References 192-193.
[c] References 168, 192 - 193, 207.
[d] References 192 - 193, 207.
[e] Based upon controlled emission factor and 70% average control efficiency from References 192-193.
[f] Based upon controlled emission factor and 45% average control efficiency from References 192-193.
[g] Based upon controlled emission factor and 73% average control efficiency from References 192-193.
[h] Based upon controlled emission factor and 48% average control efficiency from References 192-193.
[k] Based upon controlled emission factor and 67% average control efficiency from References 192-193.
[m] Based upon controlled emission factor and 75% average control efficiency from References 192-193.
[n] Based upon controlled emission factor and 96% average control efficiency from References 192-193.

Table 12.2-12 (Metric And English Units).
FILTERABLE PM EMISSION FACTORS FOR QUENCHING. (SCC 3-03-003-04)

Process	EMISSION FACTOR RATING	Emission factor, kg/Mg of coal	Emission factor, lb/ton of coal
Uncontrolled, clean water [a]	E	0.57	1.1
Uncontrolled, dirty water [a, b]	E	2.6	5.2
Clean water, tall tower and/or poor maintenance [c, d]	D	0.73	1.46
Clean water normal tower height and proper maintenance [c, d]	D	0.15	0.31
Dirty water, tall tower and/or poor maintenance [c, d]	D	1.37	2.73
Dirty water, normal tower height and proper maintenance [c, d]	D	0.27	0.54

[a] Reference 17.
[b] Dirty water: at least 5,000 mg/L TDS.
[c] Reference 18.
[d] Clean water: less than or equal to 500 mg/L TDS; dirty water: at least 1,500 mg/L TDS. For quench water having a TDS value between those for clean and dirty water, an interpolation procedure is suggested. For example, for a quench water TDS value of 1,000 mg/L, for a properly maintained tower of normal height, the following PM emission factor would be found: [(1,000 - 500)/(1,500 - 500)] x [(0.54 - 0.31) + 0.31] = 0.425 lb/ton of coal.

Table 12.2-13 (Metric And English Units).
EMISSION FACTORS FOR COMBUSTION STACK EMISSIONS--FILTERABLE PM [a]
(SCC 3-03-003-17, COG; SCC 3-03-003-18, BFG)

Source	EMISSION FACTOR RATING	Filterable PM	
		kg/Mg	Lb/ton
Uncontrolled (Raw COG) [b]	B	0.20	0.40
Uncontrolled (BFG) [c]	E	0.10	0.21
Uncontrolled (Desulfurized COG) [c]	A	0.034	0.067
With FF (Raw COG) [d]	C	0.11	0.21
With FF or ESP (BFG)	D	0.031	0.063

[a] Emission factor units are kg/Mg of coal charged or lb/ton of coal charged. A wide range of emissions is possible, depending on the condition of the oven, from black smoke in cracked ovens to clear stacks in well maintained ovens.
[b] References 89, 98, 106-109, 114, 123, 156, 157, 159, 166, 188 - 193.
[c] Reference 91.
[d] References 56 - 59, 60 - 65, 70 - 71, 76 - 78, 80 - 82, 98, 169 - 170, 176.
[e] References 45, 85, 200.

Table 12.2-14 (Metric And English Units).
EMISSION FACTORS FOR COMBUSTION STACK EMISSIONS CONDENSABLE PM [a]
(SCC 3-03-003-17, COG; SCC 3-03-003-18, BFG)

Process	EMISSION FACTOR RATING	Condensable Inorganic Emissions		Condensable Organic Emissions [b]	
		kg/Mg	lb/ton	kg/Mg	lb/ton
With COG	B	0.11 [c]	0.216 [c]	0.006	0.012
With BFG	E	0.014 [d]	0.028 [d]	0.006	0.012

[a] Expressed as kg/Mg and lb/ton of coal charged as measured by Method 202.
[b] References 87, 98, 188 - 189, 200.
[c] References 84, 86 - 89, 98, 157, 188 - 191, 200. Although no data are available for ovens fueled with desulfurized coke oven gas, it is expected that emissions will be significantly lower. It is recommended that the emission factor for ovens fueled with blast furnace gas be used for ovens fueled with desulfurized coke oven gas.
[d] References 85, 200.

Table 12.2-15 (Metric And English Units).
EMISSION FACTORS FOR METALS FROM COMBUSTION STACKS [a]
(SCC 3-03-003-17, COG; SCC 3-03-003-18, BFG)

Metal	EMISSION FACTOR RATING	Emission Factor	
		kg/Mg	lb/ton
Arsenic	E	1.64e-06	3.27e-06
Barium	E	2.36e-06	4.71e-06
Beryllium	E	1.97e-08	3.94e-08
Cadmium	E	9.95e-08	1.99e-07
Chromium	E	3.60e-06	7.19e-06
Copper	E	1.71e-06	3.41e-06
Manganese	E	1.26e-06	2.52e-06
Lead	E	2.22e-06	4.44e-06
Nickel	E	9.35e-07	1.87e-06
Phosphorus	E	1.40e-05	2.80e-05
Selenium	E	1.76e-06	3.52e-06
Thallium	E	3.36e-07	6.71e-07
Zinc	E	7.55e-06	1.51e-05

[a] Expressed as kg/Mg and lb/ton of coal charged. References 192 - 193. Emission factor should be considered an underestimate since sample analysis was performed on only the residual material following EPA Method 315 solvent extraction.

HCl emission factors were added to this draft final and are open to public comment. Comments can be sent to the Info CHIEF Help Desk at info.chief@epa.gov until September 14, 2007.

Table 12.2-16 (Metric And English Units).
EMISSION FACTORS FOR COMBUSTION STACK EMISSIONS EXTRACTABLE ORGANIC MATTER, CO, CO2, NOX, SOX, HCL, TOC AND ORGANIC COMPOUNDS [a]
(SCC 3-03-003-17, COG; SCC 3-03-003-18, BFG)

Pollutant	EMISSION FACTOR RATING	Emissions, kg/Mg	Emissions, lb/ton
Extractable Organic Matter [b]	E	0.012	0.024
Carbon Monoxide [c]	C	0.34	0.68
Carbon Dioxide (BFG) [d]	E	482	963
Carbon Dioxide (COG) [e]	A	148	296
Nitrogen Oxides [f]	B	0.82	1.64
Sulfur Oxides (Raw COG) [g]	C	1.47	2.93
Sulfur Oxides (DCOG) [h]	E	0.12	0.23
Hydrochloric Acid (DCOG)[k]	D	0.0157	0.0313
Total Organic Compounds [m]	C	0.19	0.37
Methane [n]	E	0.10	0.21
Ethane [n]	E	0.0050	0.010
Acetone[p]	E	0.0295	0.059
VOC [n, p]	E	0.047	0.094
Benzene [r]	D	0.0075	0.015
Toluene [s]	E	0.0033	0.0066
Chloromethane [s]	E	0.0032	0.0064
Benzoic Acid [r]	E	4.14e-05	8.27e-05
Bis(2-ethylhexyl)phthalate [s]	E	3.40e-06	6.79e-06
Diethyl phthalate [s]	E	9.90e-06	1.98e-05
2,4-Dimethylphenol [s]	E	4.17e-06	8.33e-06
Phenol [s]	E	2.56e-06	5.11e-06

[a] Expressed as kg/Mg and lb/ton of coal charged.
[b] Extractable Organic Matter as measured by EPA Method 315. References 192 - 193.
[c] References 16, 89, 156 - 157, 166, 170, 188 - 190.
[d] References 45, 85.
[e] References 56 - 59, 60 - 62, 63 - 65, 70 - 71, 76 - 78, 80 - 82, 84 - 85, 87 - 89, 98, 106 - 109, 123, 156 - 157, 159, 166 - 167, 169, 170, 176, 188 - 193, 200.
[f] References 16, 156 - 157, 159, 166 - 167, 170, 188 - 189.
[g] References 16, 98, 156 - 157, 159, 166.
[h] References 98.
[k] References 210-219.
[m] Total Organic Compounds (TOC) as measured by EPA Method 25a. References 16, 156 - 157, 166, 170, 176.
[n] Based upon ratio to TOC in References 176 and average TOC emission factor.
[p] References 206. Acetone emission factor should be considered an underestimate since sample collection was by Summa canister. VOC calculated as TOC less methane, ethane and acetone.
[r] References 89, 190 - 191, 206.
[s] Reference 206. Emission factors should be considered an underestimate since sample collection was by Summa canister.

Table 12.2-17 (Metric And English Units).
EMISSION FACTORS FOR COMBUSTION STACKS POLYCYCLIC AROMATIC HYDROCARBONS [a] (SCC 3-03-003-17, COG; SCC 3-03-003-18, BFG)

PAH Compound	EMISSION FACTOR RATING	Emission Factor	
		kg/Mg	lb/ton
Naphthalene	E	4.15e-05	8.29e-05
2-methylnaphthalene	E	1.46e-06	2.91e-06
Acenaphthylene	E	5.40e-06	1.08e-05
Acenaphthene	E	1.13e-07	2.26e-07 [b]
Fluorene	E	4.41e-07	8.81e-07
Phenanthrene	E	3.90e-06	7.79e-06
Anthracene	E	1.01e-07	2.02e-07 [b]
Fluoranthene	E	1.76e-06	3.52e-06
Pyrene	E	2.32e-06	4.64e-06 [b]
Benzo(a)anthracene	E	4.64e-08	9.28e-08 [b]
Crysene	E	1.64e-07	3.28e-07
Benzo(b)fluoranthene	E	9.70e-08	1.94e-07
Benzo(k)fluoranthene	E	3.35e-08	6.70e-08 [b]
Benzo(e)pyrene	E	1.69e-07	3.38e-07 [b]
Benzo(a)pyrene	C	8.15e-06	1.63e-05 [c]
Perylene	E	1.48e-08	2.96e-08 [b]
Indeno(1,2,3-cd)pyrene	E	2.06e-08	4.11e-08 [b]
Dibenzo(a,h)anthracene	E	1.48e-08	2.96e-08 [b]
Benzo(ghi)perylene	E	2.78e-08	5.55e-08 [b]

[a] Expressed as kg/Mg and lb/ton of coal charged. References 192 - 193, 206 except where noted.
[b] References 192 - 193.
[c] References 89, 188 - 193, 206.

Table 12.2-18 (Metric And English Units).
EMISSION FACTORS FOR MISCELLANEOUS COKE PRODUCTION SOURCES [a]

Source	Pollutant [b]	Emission Factor		EMISSION FACTOR RATING
		kg/Mg	lb/ton	
Coal crushing, with cyclone [c] (SCC-03-003-10)	Filterable PM	0.055	0.11	D
Coal crushing, with rotoclone [d] (SCC-03-003-10)	Filterable PM	0.027	0.054	E
Primary coal pulverizer with building enclosure [e] (SCC-03-003-99)	Filterable PM-10	0.9×10^{-4}	1.8×10^{-4}	E
Secondary coal pulverizer with building enclosure [e] (SCC-03-003-99)	Filterable PM-10	4.4×10^{-5}	8.7×10^{-5}	E
Preheater [c] (SCC-03-003-13)	Filterable PM	1.8	3.5	D
Preheater, with scrubber [c] (SCC-03-003-13)	Filterable PM	0.13	0.25	D
Preheater, with wet ESP [c] (SCC-03-003-13)	Filterable PM	0.0060	0.012	D
Coke handling, with cyclone [c] (SCC-03-003-12)	Filterable PM	0.0030	0.0060	D
Coke screening [d] (SCC-03-003-12)	Filterable PM	0.011	0.022	E
Decarbonization [f] (SCC-03-003-99)	CO	15	29	E
Soaking [f] (SCC-03-003-99)	Total particulate matter	0.008	0.015	E
Soaking [f] (SCC-03-003-99)	SO_2	0.050	0.099	E
Soaking [f] (SCC-03-003-99)	NO_x	0.0005	0.0010	E
Soaking [f] (SCC-03-003-99)	VOC	0.003	0.006	E
Soaking [f] (SCC-03-003-99)	CO	0.001	0.002	E

[a] Emission factor units are kg/Mg and lb/ton of coal charged. SCC = Source Classification Code. [Note: Emissions from material transfers between conveyors and from screening and crushing operations thst are controlled by wet suppression techniques can be estimated using the procedures in Section 11.19.2. Emissions from material loading and unloading can be estimated using the procedures in Section 13.2.4.]

[b] Filterable PM is that PM collected on or before the filter of an EPA Method 5 (or equivalent) sampling train. Total PM includes the filterable PM and the PM collected in the impingers of a PM sampling train.

[c] Reference 4.

[d] Reference 172.

[e] References 173-175.

[f] Reference 15.

Table 12.2-19 (Metric Units).
PARTICLE SIZE DATA FOR COKE PRODUCTION [a]

Source	Cumulative Mass Percent Less Than Stated Size, μm						
	15.0	10.0	5.0	2.5	2.0	1.0	0.5
Coal preheating (SCC 3-03-003-13)	99.9	97.5	79.5	59.5	55	48.5	44
Coal preheating, with venturi scrubber (SCC 3-03-003-13)	96.5	94	88	84	83	80	78
Coal charging (sequential or stage) (SCC 3-03-003-02)	49	48.9	45.8	39.1	33.6	25.2	13.5
Coke pushing (SCC 3-03-003-03)	50	43.3	26.6	16.7	14.8	7.7	3.1
Coke pushing, with venturi scrubber (SCC 3-03-003-03)	92	87	75	73.5	66.5	47	24
Coke pushing, with mobile scrubber car (SCC 3-03-003-03)	35	32	30	30	29.5	28	ND
Quenching, with dirty water (SCC 3-03-003-04)	26.4	22.8	21.4	19.3	ND	13.8	ND
Quenching, with clean water (SCC 3-03-003-04)	37.4	30.1	19.1	11.1	ND	4.0	ND
Quenching, with baffles and dirty water (SCC 3-03-003-04)	49.8	32.3	24.8	20.4	ND	8.5	ND
Quenching, with baffles and clean water (SCC 3-03-003-04)	15.1	9.8	7.0	6.0	ND	1.2	ND
Combustion stack (SCC 3-03-003-17)	96	95.9	95.8	93.5	85.7	77.4	ND

[a] Reference 17. These data were collected primarily in the 1970s and their applicability to post-NESHAP batteries is unknown. The data are described in Reference 17, where they are accompanied by graphs of cumulative percent of particles vs. particle size. SCC = Source Classification Code. ND = no data.

Table 12.2-20 (Metric And English Units).
EMISSION FACTORS FOR COKE PRODUCTION:
NONRECOVERY COMBUSTION STACKS[a] (SCC 3-03-003-17)
EMISSION FACTOR RATING: B

Pollutant	Emission Factor	
	kg/Mg	lb/ton
Filterable PM [b]	0.90	1.8
Condensable PM [c]	0.075	0.15
SO_2 [d]	4.7	9.3
NO_x [d]	0.36	0.71
CO [d]	0.025	0.05
Benzene [e]	0.00024	0.00048
Toluene [f]	0.00026	0.00051
Naphthalene [g]	0.00014	0.00027
Phenol [f, h]	3.6×10^{-5}	7.1×10^{-5}
Benzo(a) pyrene [j]	5.0×10^{-7}	1.0×10^{-6}
Acetone [f]	1.1×10^{-3}	2.3×10^{-3}
Bromomethane [f]	2.8×10^{-4}	5.6×10^{-4}
Chloromethane [f]	3.8×10^{-4}	7.6×10^{-4}
Methylene Chloride [f]	3.3×10^{-4}	6.6×10^{-4}
Carbon Disulfide [f]	8.1×10^{-6}	1.6×10^{-5}
2-Butanone [f]	3.2×10^{-5}	6.3×10^{-5}
1,1,1-Trichloroethane [f]	1.3×10^{-6}	2.5×10^{-6}
Trichloroethene [f]	4.4×10^{-6}	8.7×10^{-6}
Ethylbenzene [f]	1.6×10^{-6}	3.2×10^{-6}
m-/p-Xylene [f]	6.5×10^{-6}	1.3×10^{-5}
o-Xylene [f]	1.6×10^{-6}	3.2×10^{-6}
Iodomethane [f]	3.2×10^{-6}	6.3×10^{-6}
Dibromomethane [f]	6.0×10^{-6}	1.2×10^{-5}
Trichlorofluoromethane [f]	4.1×10^{-6}	8.2×10^{-6}
n-Hexane [f]	7.3×10^{-6}	1.5×10^{-5}
Isooctane [f]	8.0×10^{-6}	1.6×10^{-5}
P-Cymene [f]	5.5×10^{-7}	1.1×10^{-6}
Cumene [f]	7.1×10^{-7}	1.4×10^{-6}
2-Hexanone [f]	1.4×10^{-5}	2.8×10^{-5}
Ethyl Methacrylate [f]	1.7×10^{-6}	3.4×10^{-6}
Styrene [f]	3.4×10^{-6}	6.9×10^{-6}
Vinyl Acetate [f]	3.5×10^{-6}	6.9×10^{-6}
1,2,3-Trichloropropane [f]	2.2×10^{-6}	4.4×10^{-6}

Table 12.2-20. (continued)

Pollutant	Emission Factor	
	kg/Mg	lb/ton
Chloroform [f]	5.7×10^{-6}	1.1×10^{-5}
Dibromochloromethane [f]	1.2×10^{-7}	2.4×10^{-7}
1,1,2-Trichloroethane [f]	2.9×10^{-7}	5.8×10^{-7}
Bromoform [f]	5.7×10^{-7}	1.2×10^{-6}
4-Methyl-2-Pentanone [f]	4.5×10^{-6}	8.9×10^{-6}
1,1,2,2-Tetrachloroethane [f]	1.1×10^{-6}	2.0×10^{-6}
1,4-Dichloro-2-butene [f]	6.9×10^{-7}	1.4×10^{-6}
Tetrachloroethane [f]	2.0×10^{-7}	4.1×10^{-7}
Tert-Butyl methyl ether [f]	2.4×10^{-8}	4.7×10^{-8}
Chlorobenzene [f]	6.1×10^{-7}	1.2×10^{-6}
Dimethyl Sulfide [f]	1.6×10^{-6}	3.2×10^{-6}
Antimony [g]	6.3×10^{-5}	0.00013
Arsenic [g]	0.00063	0.0013
Barium [g]	6.3×10^{-5}	0.00013
Beryllium [g]	1.0×10^{-5}	2.0×10^{-5}
Cadmium [g]	9.0×10^{-5}	0.00018
Chromium [g]	0.00032	0.00063
Copper [g]	0.0014	0.0028
Lead [d]	0.0016	0.0031
Manganese [g]	0.00015	0.00030
Mercury [g]	0.0017	0.00033
Nickel [g]	0.00029	0.00058
Phosphorus [g]	0.0070	0.014
Selenium [g]	0.00016	0.00032
Silver [g]	2.3×10^{-5}	4.5×10^{-5}
Thallium [g]	9.0×10^{-5}	0.00018
Zinc [g]	0.0026	0.0051

[a] Emission factor units are kg/Mg and lb/ton of coal charged. SCC = Source Classification Code. Na = not applicable.
[b] References 23-24, 49. Filterable PM is that PM collected on or before the filter of an EPA Method 5 (or equivalent) sampling train.
[c] References 24. Condensable PM is that PM collected in the impinger portion of a PM sampling train.
[d] References 23-24, 49.
[e] References 23-24. Based on volatile organic sampling train (VOST) results and an estimated rate of 30 ton/hr of coal charged.
[f] References 24. Based on volatile organic sampling train (VOST) results and an estimated rate of 30 tons/hr of coal charged.
[g] References 24.

Table 12.2-21 (Metric And English Units).
EMISSION FACTORS FOR COKE PRODUCTION: NONRECOVERY CHARGING [a]
(SCC 3-03-003-02)
EMISSION FACTOR RATING: D

Pollutant	Uncontrolled Emissions		Controlled Emissions [b]	
	kg/Mg	lb/ton	kg/Mg	lb/ton
Filterable PM [c]	0.013	0.027	0.0041	0.0081
TSO [d]	0.0013	0.0026	0.0011	0.0022
Benzene	1.8×10^{-5}	3.6×10^{-5}	1.8×10^{-5}	3.6×10^{-5}
Toluene	8.4×10^{-6}	1.7×10^{-5}	8.4×10^{-6}	1.7×10^{-5}
Xylene	3.4×10^{-6}	6.7×10^{-6}	3.4×10^{-6}	6.7×10^{-6}
Carbon disulfide	1.1×10^{-6}	2.1×10^{-6}	1.1×10^{-6}	2.1×10^{-6}
Chloromethane	1.0×10^{-6}	2.0×10^{-6}	1.0×10^{-6}	2.0×10^{-6}
Ethyl benzene	3.6×10^{-7}	7.3×10^{-7}	3.6×10^{-7}	7.3×10^{-7}
Naphthalene	1.2×10^{-5}	2.3×10^{-5}	1.2×10^{-5}	2.3×10^{-5}
Total PAHs [e]	1.4×10^{-5}	2.7×10^{-5}	1.1×10^{-5}	2.1×10^{-5}
Manganese	7.5×10^{-7}	1.5×10^{-6}	2.3×10^{-7}	4.6×10^{-7}
Arsenic	4.0×10^{-7}	7.9×10^{-7}	1.2×10^{-7}	2.4×10^{-7}
Nickel	2.5×10^{-7}	5.0×10^{-7}	7.5×10^{-8}	1.5×10^{-7}
Lead	1.7×10^{-7}	3.4×10^{-7}	5.0×10^{-8}	1.0×10^{-7}
Chromium	1.7×10^{-7}	3.4×10^{-7}	5.0×10^{-8}	1.0×10^{-7}
Cobalt	1.2×10^{-7}	2.4×10^{-7}	3.6×10^{-8}	7.1×10^{-8}
Beryllium	1.5×10^{-8}	2.9×10^{-8}	4.4×10^{-9}	8.7×10^{-9}
Mercury	1.3×10^{-9}	2.6×10^{-9}	4.0×10^{-10}	7.9×10^{-10}

[a] References 25. Emission factor units are kg/Mg and lb/ton of coal charged. SCC = Source Classification Code.
[b] Fabric filter control system; based on estimated 70 percent capture efficiency and analysis of baghouse catch as described in Reference 209.
[c] Filterable PM is that PM collected on or before the filter of an EPA Method 5 (or equivalent) sampling train.
[d] Toluene soluble organics.
[e] Polyaromatic hydrocarbons.

Table 12.2-22 (Metric And English Units).
EMISSION FACTORS FOR COKE BYPRODUCT RECOVERY PLANTS--BENZENE AND BTX [a]
EMISSION FACTOR RATING: E

Type Of Byproduct Plant Operation	Benzene				BTX [c]			
	Furnace Plant		Foundry Plant [b]		Furnace Plant		Foundry Plant	
	kg/Mg	lb/ton	kg/Mg	lb/ton	kg/Mg	lb/ton	kg/Mg	lb/ton
Light-oil storage tank [d] (SCC 3-03-003-99)	0.0058	0.012	0.0031	0.0062	0.0083	0.017	0.0049	0.0098
with gas blanketing	0.00012	0.00024	0.000060	0.00012	0.00017	0.00034	0.000094	0.00019
Tar decanter [e] (SCC 3-03-003-31)	0.054	0.11	0.025	0.050	0.077	0.15	0.039	0.078
with gas blanketing	0.0011	0.0022	0.0005	0.0010	0.0016	0.0032	0.00079	0.00158
Naphthalene separation and processing [f] (SCC 3-03-003-53)	0.11	0.22	0.080	0.16	0.16	0.32	0.13	0.26
with activated carbon [g]	0.00035	0.00070	0.00025	0.00050	0.00050	0.0010	0.00039	0.0078
Cooling tower, direct-water [h] (SCC 3-03-003-51)	0.27	0.54	0.20	0.40	0.69	1.4	0.61	1.2
Cooling tower, tar-bottom [j] (SCC 3-03-003-52)	0.070	0.14	0.051	0.10	0.10	0.20	0.080	0.16
Tar intercepting sump [k] (SCC 3-03-003-35)	0.0095	0.019	0.0045	0.0090	0.014	0.028	0.0071	0.014
Tar dewatering tank [m] (SCC 3-03-003-34)	0.021	0.042	0.0099	0.020	0.030	0.060	0.016	0.032
with gas blanketing	0.00045	0.00084	0.00020	0.00040	0.00060	0.0012	0.00031	0.00062
Tar storage tank [n] (SCC 3-03-003-36)	0.0066	0.013	0.0031	0.0062	0.0094	0.019	0.0049	0.0098
with gas blanketing	0.00038	0.00076	0.00018	0.00036	0.00054	0.0011	0.00028	0.00056
Light-oil condenser vent [f] (SCC 3-03-003-42)	0.089	0.18	0.048	0.096	0.13	0.26	0.076	0.15
with gas blanketing	0.0018	0.0036	0.00097	0.0019	0.0026	0.0052	0.0015	0.0030
Light-oil sump [p] (SCC 3-03-003-41)	0.015	0.030	0.0081	0.016	0.021	0.042	0.013	0.026
with gas blanketing	0.00030	0.00060	0.00016	0.00032	0.00043	0.00086	0.0025	0.0050
BTX storage [d] (SCC 3-03-003-99)	0.0058	0.012	0.0031	0.0062	0.0083	0.017	0.0049	0.0098
with gas blanketing	0.00012	0.00024	0.000060	0.00012	0.00017	0.00034	0.000094	0.00019

Table 12.2-22. (continued)

Type Of Byproduct Plant Operation	Benzene				BTX [c]			
	Furnace Plant		Foundry Plant [b]		Furnace Plant		Foundry Plant	
	kg/Mg	lb/ton	kg/Mg	lb/ton	kg/Mg	lb/ton	kg/Mg	lb/ton
Benzene storage [q] (SCC 3-03-003-99)	0.0058	0.0116	0.0031	0.0062	0.0058	0.0116	0.0031	0.0062
with gas blanketing	0.00012	0.00024	0.00006	0.00012	0.00012	0.00024	0.000060	0.00012
Flushing liquor circulation tank [r] (SCC 3-03-003-32)	0.013	0.026	0.0095	0.019	0.019	0.038	0.015	0.030
with gas blanketing	0.00026	0.00052	0.00019	0.00038	0.00037	0.00074	0.00030	0.00060
Excess-ammonia liquor tank [g] (SCC 3-03-003-33)	0.0014	0.0028	0.0010	0.0020	0.0020	0.0040	0.0016	0.0032
with gas blanketing	0.000028	0.000056	0.000020	0.000040	0.000040	0.00008	0.000031	0.000062
Wash-oil decanter [s] (SCC 3-03-003-43)	0.0038	0.0076	0.0021	0.0042	0.0054	0.011	0.0033	0.0066
with gas blanketing	0.000076	0.00015	0.000041	0.000082	0.00011	0.00022	0.000065	0.00013
Wash-oil circulation tank [s] (SCC 3-03-003-44)	0.0038	0.0076	0.0021	0.0042	0.0054	0.011	0.0033	0.0066
with gas blanketing	0.000076	0.00015	0.000041	0.000082	0.00011	0.00022	0.000065	0.00013

[a] Emission factor units are kg/Mg and lb/ton of coke pushed. SCC = Source Classification Code. Uncontrolled emission factors represent byproduct-plant pre-NESHAP values; controlled emission factors represent post-NESHAP values. Refer to Table 12.2-1 for summary of pre- and post-NESHAP controls. The NESHAP prohibits emissions from naphthalene processing.
[b] Emission factors for foundry plants based on corresponding factor for furnace plants as derived in Reference 5.
[c] BTX = benzene, toluene, and xylene. Factors for BTX based on corresponding factors for benzene emissions as derived in Reference 5.
[d] Reference 208. Toluene ranges from 17 to 26 percent of BTX, and xylene ranges from 4 to 13 percent of BTX. The reader may also use EPAs TANKS program to estimate emissions from this source. The program is available in electronic form through EPA's Info CHIEF Help Desk. For information call (919) 541-1000.
[e] References 29-30,38. Benzene factor for furnace plant rated D.
[f] Reference 29.
[g] Reference 38.
[h] References 29,32.
[j] Reference 33.
[k] Reference 31.
[m] References 30,32-33. Benzene factor for furnace plant rated B.
[n] References 31, 38. Benzene factor for furnace plant rated B.
[p] References 34-35. Benzene factor for furnace plant rated B.
[q] Reference 208. The reader may also use EPAs TANKS program to estimate emissions from this source. The program is available in electronic form through EPA's Info CHIEF Help Desk. For information call (919) 541-1000.
[r] Reference 38. Benzene factor for furnace plant rated D.
[s] Reference 32.

Table 12.2-23 (Metric And English Units).
EMISSION FACTORS FOR COKE BYPRODUCT RECOVERY PLANTS--VOCs[a]
EMISSION FACTOR RATING: E

Type Of Byproduct Plant Operation	VOC, Furnace Plant		VOC, Foundry Plant	
	kg/Mg	lb/ton	kg/Mg	lb/ton
Light-oil storage tank[b] (SCC 3-03-003-99)	0.0083	0.017	0.0049	0.0098
with gas blanketing	0.00017	0.00034	0.000094	0.00018
Tar decanter[c] (SCC 3-03-003-31)	0.12	0.24	0.057	0.11
with gas blanketing	0.0023	0.0046	0.011	0.0022
Naphthalene separation and processing[d] (SCC 3-03-003-53)	0.17	0.34	0.14	0.28
with activated carbon[e]	0.00055	0.0011	0.00043	0.00086
Cooling tower, direct-water[f] (SCC 3-03-003-51)	4.2	8.4	3.2	6.4
Cooling tower, tar-bottom[g] (SCC 3-03-003-52)	1.1	2.2	0.81	1.6
Tar intercepting sump[h] (SCC 3-03-003-35)	0.14	0.28	0.0071	0.014
Tar dewatering tank[j] (SCC 3-03-003-34)	0.030	0.060	0.016	0.032
with gas blanketing	0.00060	0.0012	0.00031	0.00062
Tar storage tank[k] (SCC 3-03-003-36)	0.16	0.32	0.073	0.15
with gas blanketing	0.0089	0.018	0.0043	0.0086
Light-oil condenser vent[d] (SCC 3-03-003-42)	0.13	0.26	0.076	0.15
with gas blanketing	0.0026	0.0052	0.0015	0.030
Light-oil sump[m] (SCC 3-03-003-41)	0.021	0.042	0.013	0.026
with gas blanketing	0.00043	0.00086	0.00025	0.00050
BTX storage[b] (SCC 3-03-003-99)	0.0083	0.0166	0.0049	0.0098
with gas blanketing	0.00017	0.00034	0.000094	0.00019
Benzene storage[b] (SCC 3-03-003-99)	0.0058	0.012	0.0031	0.0062
with gas blanketing	0.00012	0.00024	0.000060	0.00012
Flushing liquor circulation tank[e] (SCC 3-03-003-32)	0.019	0.038	0.015	0.030
with gas blanketing	0.00037	0.00074	0.00030	0.00060
Excess ammonia liquor tank[e] (SCC 3-03-003-33)	0.002	0.004	0.0016	0.0032
with gas blanketing	0.000040	0.000080	0.000031	0.000062

Table 12.2-23. (continued)

Type Of Byproduct Plant Operation	VOC, Furnace Plant		VOC, Foundry Plant	
	kg/Mg	lb/ton	kg/Mg	lb/ton
Wash-oil decanter[h] (SCC 3-03-003-43)	0.0054	0.0108	0.0033	0.0066
with gas blanketing	0.00011	0.00022	0.000065	0.00013
Wash-oil circulation tank[n] (SCC 3-03-003-44)	0.0054	0.0108	0.0033	0.0066
with gas blanketing	0.00011	0.00022	0.000065	0.00013

[a] Emission factor units are kg/Mg and lb/ton of coke pushed. SCC = Source Classification Code. Uncontrolled emission factors represent byproduct-plant pre-NESHAP values; controlled emission factors represent post-NESHAP values. The NESHAP prohibits emissions from naphthalene processing. Emission factors for VOC are based on corresponding factors for benzene emissions as derived in Reference 209 and presented in Table 12.2-19.

[b] Reference 208. The reader may also use EPAs TANKS program to estimate emissions from this source. The program is available in electronic form through EPA's Info CHIEF Help Desk. For information call (919) 541-1000.

[c] References 29-30, 38.

[d] Reference 29.

[e] Reference 38.

[f] References 29, 32.

[g] Reference 33.

[h] Reference 31.

[j] References 30, 32-33.

[k] References 31, 38.

[m] References 34-35.

[n] Reference 32.

Table 12.2-24 (Metric And English Units).
EMISSION FACTORS FOR COKE BYPRODUCT RECOVERY PLANTS:
EQUIPMENT LEAKS--VOCs [a]
EMISSION FACTOR RATING: E

Source	VOC	
	kg/d	lb/d
Pumps (SCC 3-03-003-61)	2.7	6.0
with quarterly inspections	0.78	1.7
with monthly inspections	0.46	1.0
with dual mechanical seals	0	0
Valves (SCC 3-03-003-61)	0.26	0.57
with quarterly inspections	0.12	0.26
with monthly inspections	0.07	0.15
with sealed-bellows valves	0	0
Exhausters (SCC 3-03-003-61)	1.2	2.6
with quarterly inspections	0.54	1.2
with monthly inspections	0.43	0.95
with degassing reservoir	0	0
Pressure relief devices (SCC 3-03-003-61)	3.9	8.6
with quarterly inspections	2.2	4.9
with monthly inspections	1.9	4.2
rupture disc system	0	0
Sampling connection systems (SCC 3-03-003-61)	0.36	0.79
with cap or plug	0	0
Open ended lines (SCC 3-03-003-61)	0.055	0.12
with cap or plug	0	0

[a] Reference 208. Emission factor units are kg and lb per piece of equipment per day. SCC = Source Classification Code. Facilities having an effective leak detection and repair (LDAR) program and screening values required by EPAs *Protocol for Equipment Leak Emission Estimates* (EPA-453/R-95-017), may use the correlation approach for refineries contained in the document.

REFERENCES FOR SECTION 12.2

1. *Source Testing of a Stationary Coke-Side Enclosure: Great Lakes Carbon Corporation, St. Louis, MO,* EPA-340/1-76-014(a) and (b), U. S. Environmental Protection Agency, Washington, DC, August 1977.

2. *Source Testing of a Stationary Coke-Side Enclosure: Burns Harbor Plant, Bethlehem Steel Corporation, Chesterton, IN,* EPA-340/1-76-012, U. S. Environmental Protection Agency, Washington, DC, May 1977.

3. *Emission Testing at a Byproduct Coke Oven Battery, Wisconsin Steel, Chicago, IL,* EMB 77-CKO-11, U. S. Environmental Protection Agency, Washington, DC, May 1978.

4. *Particulate Emission Factors Applicable to the Iron and Steel Industry,* EPA-450/4-79-028, U. S. Environmental Protection Agency, Research Triangle Park, NC, September 1979.

5. *Emission Test Report: Armco Steel, Houston, TX*. EMB 79-CKO-22. U. S. Environmental Protection Agency, Research Triangle Park, NC, November 1979.

6. C. Allen, *A Model to Estimate Hazardous Emissions from Coke Oven Doors,* EPA Contract No. 68-02-1408, Docket Item II-A-38 in Docket No. A-79-15, March 1980.

7. *Final Phase I Method Validation Report for Quantitative Coke Oven Door Leak Measurement Study,* ENSR Consulting and Engineering, for American Iron and Steel Institute, Washington, DC. December 1991.

8. *Emission Test Report - U.S. Steel Corporation, Clairton, Pennsylvania,* EMB Report No. 7 78-CKO-13. TRW, Inc. July 1980.

9. *Coke Oven Emissions from Wet-Coal Charged Byproduct Coke Oven Batteries - Background Information for Proposed Standards,* EPA-450/3-85-028a, U. S. Environmental Protection Agency, Research Triangle Park, NC. April 1987.

10. Memorandum from Ackerman, E., USEPA Region III, to A. Agnew, EPA/OAQPS. Transmitting information on bypassed coke oven gas. April 8, 1991.

11. Coke Oven Gas Study Performed for Bethlehem Steel Corporation, Mostardi-Platt Associates, Inc., December 1992.

12. R W. Bee et al, *Coke Oven Charging Emission Control Test Program,* EPA-650/2-74-062, U. S. Environmental Protection Agency, July 1974.

13. A. Trenholm and L. Beck, *Assessment of Hazardous Organic Emissions from Slot Type Coke Oven Batteries, unpublished paper,* U. S. Environmental Protection Agency, Research Triangle Park, NC, March 1978.

14. *Assessment of Bypassed Coke Oven Gas: Evaluation of Emissions and Controls.* USEPA Docket Number A-79-15, Docket Item VIII-B-2.

15. G. Leney, *Emissions Inventory Development for Byproduct Coke Plants in Allegheny County, PA,* presented at AWMA meeting, Raleigh, NC, November 1994.

16. T. W. Easterly, *Selecting the Appropriate Emission Factor for Estimating Emissions from Iron and Steel Sources*, Presented at the 87th Annual Meeting of the Air and Waste Management Association, Cincinnati, OH, June 1994.

17. *Metallurgical Coke Industry Particulate Emissions: Source Category Report*, EPA-600/7-86-050, U. S. Environmental Protection Agency, Air and Energy Research Laboratory, Research Triangle Park, NC, December 1986.

18. B. Bloom and J. D. Jeffrey, *Review of Coke Plant Quench Tower Particulate Emission Rates*, Environmental Protection Agency, *circa* 1982.

19. *Compliance Tests of the Envirotech Hooded Quench Car No. 104*, Volume I - Test Report, Project No. 50.50, United States Steel Clairton Works, Clairton, PA, February 12, 1985.

20. *Compliance Tests of the Envirotech Hooded Quench Car No. 103 Operated on the Number 20 Coke Battery Located at the United States Steel Clairton Works*, Project No. 40.74, Clairton, PA, September 11, 1985.

21. *Compliance Tests of the Envirotech Hooded Quench Car No. 106 Operated on the Number 7, 8 and 9 Batteries Located at the United States Steel Clairton Works*, Project No. 50.74, Clairton, PA, October 28, 1985.

22. *United States Steel Corporation Clairton Coke and Coal Chemical Works, Results of the Compliance Demonstration of the Pushing Emissions Control for B-Battery*, Project No. 601000-15, Monroeville, PA, April 1990.

23. *Non-Recovery Coke Oven Waste Heat and Air Pollution Characterization, Revision 1.0*, IT 406000.12, International Technology Corporation, Knoxville, TN, January 1991.

24. *Testing Non-Recovery Coke Ovens for Standards Development*, Final Report, U. S. Environmental Protection Agency, Research Triangle Park, NC, September 1992.

25. *Engineering Evaluation of the Charging Machine Hood System*, IT 406253.17, International Draft EIS Technology Corporation, Knoxville, TN, December 1992.

26. *Benzene Emissions from Coke Byproduct Recovery Plants - Background Information for Proposed Standards, Draft EIS*, EPA-450/3-83-016a, U. S. Environmental Protection Agency, Research Triangle Park, NC, May 1984.

27. *Benzene Emissions from Coke Byproduct Recovery Plants - Background Information for Revised Proposed Standards, Draft EIS*, EPA-4/4503-83-016b, U. S. Environmental Protection Agency, Research Triangle Park, NC June 1988.

28. *Benzene Emission from Coke Byproduct Recovery Plants, Benzene Storage Vessels, Equipment Leaks, and Ethylbenzene /Styrene Process Vents - Background Information and Responses to Technical Comments for 1989 Final Decisions. Final EIS*, EPA-450/3-89-31, U. S. Environmental Protection Agency, Research Triangle Park, NC, 1989.

29. *Benzene Coke Oven Byproduct Plants Emission Test Report--Bethlehem Steel, Bethlehem, Pennsylvania*. EMB Report 80-BY-1, U. S. Environmental Protection Agency, Research Triangle Park, NC, March 1981.

30. *Benzene Coke Oven Byproduct Plants--Emission Test Report--Bethlehem Steel Corporation, Burns Harbor, Indiana*. EMB Report 80-BYC-5, U. S. Environmental Protection Agency, Research Triangle Park, NC, March 1981.

31. *Benzene Coke Oven Byproduct Plants Emission Test Report--Wheeling-Pittsburgh Steel Corporation, Monessen, Pennsylvania.* EMB Report 80-BYC-3, U. S. Environmental Protection Agency, Research Triangle Park, NC, March 1981.

32. *Benzene Coke Oven Byproduct Plants Emission Test Report--U.S. Steel, Fairless Hills, Pennsylvania*. EMB Report 80-BYC-8, U. S. Environmental Protection Agency, Research Triangle Park, NC, March 1981.

33. *Benzene Coke Oven Byproduct Plants Emission Test Report--CF&I Steel Corporation, Pueblo, Colorado.* EMB Report 80-BYC-6. U. S. Environmental Protection Agency, Research Triangle Park, NC, March 1981.

34. *Benzene Coke Oven Byproduct Plants Emission Test Report--Republic Steel Corporation, Gadsden, Alabama.* EMB Report 80-BYC-4, U. S. Environmental Protection Agency, Research Triangle Park, NC, March 1981.

35. *Benzene Coke Oven Byproduct Plants Emission Test Report--United States Steel Corporation, Clairton, Pennsylvania.* EMB Report 80-BYC-2, U. S. Environmental Protection Agency, Research Triangle Park, NC, March 1981.

36. *Environmental Assessment of Coke Byproduct Recovery Plants.* EPA-600/2-79-016, U. S. Environmental Protection Agency, Research Triangle Park, NC, January 1979.

37. *Benzene Fugitive Leaks Coke Oven Byproduct Plants, Leak Frequency and Emission Factors for Fittings In Coke Oven Byproduct Plants,* EMB Report 81-BYC-12, U. S. Environmental Protection Agency, Research Triangle Park, NC, January 1982.

38. *Keystone Environmental Resources, Inc., Development and Evaluation of Emission Factors for Byproduct Plant Processes in Coke Plants,* Project No. 374400, Monroeville, PA, May 1990.

39. *Draft Final Phase II Method Validation Report for Quantitative Coke Oven Door Leak Measurement Study*, ENSR Consulting and Engineering, for American Iron and Steel Institute, Washington, DC. January 1992.

40. *Emission Evaluation of the "A" Battery Push Emission Scrubber, Bethlehem Steel Corporation, Bethlehem, PA,* BCM Eastern Inc., Plymouth Meeting, PA, November 1987.

41. *Particulate Emission Determination of the Coke Battery "A" Scrubber Stack, Bethlehem Steel Corporation, Bethlehem, PA,* BCM Engineers, Planners, and Scientists, Plymouth Meeting, PA, January 1989.

42. *Compliance Particulate Emission Determination of the Coke Battery "A" Scrubber Stack, Bethlehem Steel Corporation, Bethlehem, PA,* BCM Engineers, Planners, and Scientists, Plymouth Meeting, PA, October 1990.

43. *Particulate Evaluation of Coke Battery "A" Scrubber Stack, Bethlehem Steel Corporation, Bethlehem, PA,* BCM Engineers Inc., Pittsburgh, PA, September 1991.

44. *Particulate Emission Evaluation "A" Battery Scrubber Stack, Bethlehem Steel Corporation, Bethlehem, PA*, BCM Engineers, Planners, Scientist and Laboratory Services, Pittsburgh, PA, December 1992.

45. *Rouge Steel Company, "C" Coke Oven Combustion Stack Particulate Compliance Survey*, Ford Motor Company Stationary Source Environmental Control Office, Michigan, July 1, 1986.

46. *Rouge Steel Company, "C" Coke Oven Pushing Shed Baghouse Particulate Compliance Survey*, Ford Motor Company Stationary Source Environmental Control Office, Michigan, July 8-10, 1986.

47. *Rouge Steel Company, "C" Coke Oven Pushing Shed Baghouse Particulate Compliance Survey*, Ford Motor Company Stationary Source Environmental Control Office, Michigan, March 25-27, 1986.

48. *Rouge Steel Company, No. 1 Push Control System "A" and "Ax" Coke Oven Batteries Particulate Emission Survey*, Ford Motor Company Stationary Source Environmental Control Office, Michigan, August 20-22, 1985.

49. *Results of Particulate and SO_2 Stack Emission Tests During a 48 Hour Coking Cycle (#3-C Coke Battery)*, Prepared for Jewell Coal and Coke Company, Vansant, VA, IT Air Quality Services, Knoxville, TN, May 8, 1991.

50. *Particulate Emissions Compliance Testing #1 and 2 Incinerator Outlet Stacks, Mountaineer Carbon Company, Moundsville, West Virginia*, Entropy Environmentalist Inc., Research Triangle Park, NC, September 1984.

51. *Particulate Emissions Compliance Testing #1 and 2 Incinerator Outlet Stacks, Mountaineer Carbon Company, Moundsville, West Virginia*, Entropy Environmentalist Inc., Research Triangle Park, NC, December 1984.

52. *Particulate Evaluation of Coke Oven Battery No. 1 Combustion Stack at Shenango Incorporated, Neville Island Plant, Pittsburgh, PA*, BCM Engineers, Inc., Pittsburgh, PA, October 10, 1989.

53. *Particulate Evaluation of Coke Oven Battery No. 1 Combustion Stack at Shenango Incorporated, Neville Island Plant, Pittsburgh, PA*, BCM Engineers, Inc., Pittsburgh, PA, December 18, 1989.

54. *Particulate Evaluation of Coke Oven Battery No. 4 Combustion Stack at Shenango Incorporated, Neville Island Plant, Pittsburgh, PA*, BCM Engineers, Inc., Pittsburgh, PA, December 27, 1984.

55. *Compliance Tests of the Envirotech Hooded Quench Car No. 102 Operated on the Number 7, 8, and 9 Coke Batteries Located at the United States Steel Clairton Works*, Air Pollution Technology, Inc., San Diego, CA, October 28, 1985.

56. *Compliance Demonstration of the #14 Battery Combustion Stack, USS Clairton Works, Clairton, PA*, Keystone Environmental Resources, Inc., Monroeville, PA, November 1990.

57. *Compliance Demonstration #13 Battery Combustion Stack, USS Clairton Works, Clairton, PA*, Keystone Environmental Resources, Inc., Monroeville, PA, September 1990.

58. *Compliance Demonstration No. 7 Battery Combustion Stack, USS Clairton Works, Clairton, PA*, Keystone Environmental Resources, Inc., Monroeville, PA, September 1990.

59. *Compliance Demonstration No.19 Battery Combustion Stack, USS Clairton Works, Clairton, PA*, Keystone Environmental Resources, Inc., Monroeville, PA, January 1991.

60. *Compliance Demonstration #1 Battery Combustion Stack, USS Clairton Works, Clairton, PA*, Keystone Environmental Resources, Inc., Monroeville, PA, February 1992.

61. *Compliance Demonstration #13 Battery Combustion Stack, USS Clairton Works, Clairton, PA*, Keystone Environmental Resources, Inc., Monroeville, PA, April 1992.

62. *Compliance Demonstration #14 Battery Combustion Stack, USS Clairton Works, Clairton, PA*, Keystone Environmental Resources, Inc., Monroeville, PA, May 1992.

63. *Compliance Demonstration B Battery Combustion Stack, USS Clairton Works, Clairton, PA*, Keystone Environmental Resources, Inc., Monroeville, PA, August 1992.

64. *Compliance Demonstration #19 Battery Combustion Stack, USS Clairton Works, Clairton, PA*, Keystone Environmental Resources, Inc., Monroeville, PA, August 1992.

65. *Compliance Demonstration # 9 Battery Combustion Stack, USS Clairton Works, Clairton, PA*, Keystone Environmental Resources, Inc., Monroeville, PA, November 1992.

66. *Compliance Demonstration 1, 2, and 3 Battery Pushing Emission Control, USS Clairton Works, Clairton, PA*, Chester Environmental, Monroeville, PA, February 1993.

67. *Compliance Demonstration Battery B Baghouse, USS Clairton Works, Clairton, PA*, Chester Environmental, Monroeville, PA, December 1993.

68. *Compliance Demonstration, #7 Battery Combustion Stack, USS Clairton Works, Clairton, PA*, Chester Environmental, Monroeville, PA, January 1993.

69. *Compliance Demonstration No. 7, 8, and 9 Battery Pushing Emission Control, USS Clairton Works, Clairton, PA*, Chester Environmental, Monroeville, PA, February 1993.

70. *Compliance Demonstration #3 Battery Combustion Stack, USS Clairton Works, Clairton, PA*, Chester Environmental, Monroeville, PA, September 1993.

71. *Compliance Demonstration No. 2 Battery Combustion Stack, USS Clairton Works, Clairton, PA*, Chester Environmental, Monroeville, PA, October 1993.

72. *Compliance Demonstration 19 and 20 Battery Pushing Emission Control, USS Clairton Works, Clairton, PA*, Chester Environmental, Monroeville, PA, February 1993.

73. *Compliance Demonstration No. 13, 14, and 15 Battery Pushing Emission Control, USS Clairton Works, Clairton, PA*, Chester Environmental, Monroeville, PA, December 1993.

74. *Compliance Demonstration No. 1, 2, and 3 Battery Pushing Emission Control, USS Clairton Works, Clairton, PA*, Chester Environmental, Monroeville, PA, April 1994.

75. *Compliance Demonstration No. 7, 8, and 9 Battery Pushing Emission Control, USS Clairton Works, Clairton, PA*, Chester Environmental, Monroeville, PA, April 1994.

76. *Compliance Demonstration No. 7 Battery Combustion Stack, USS Clairton Works, Clairton, PA*, Chester Environmental, Monroeville, PA, June 1994.

77. *Compliance Demonstration No. 9 Battery Combustion Stack, USS Clairton Works, Clairton, PA*, Chester Environmental, Monroeville, PA, June 1994.

78. *Compliance Demonstration No. 13 Battery Combustion Stack, USS Clairton Works, Clairton, PA*, Advance Technology Systems, Inc., Monroeville, PA, August 1994.

79. *Compliance Demonstration, No. 14 Battery Combustion Stack, USS Clairton Works, Clairton, PA*, Chester Environmental, Monroeville, PA, September 1994.

80. *Compliance Demonstration No.19 Battery Combustion Stack, USS Clairton Works, Clairton, PA*, Advanced Technology Systems, Inc., Monroeville, PA, September 1994.

81. *Compliance Demonstration No.20 Battery Combustion Stack, USS Clairton Works, Clairton, PA*, Advanced Technology Systems, Inc., Monroeville, PA, October 1994.

82. *Compliance Demonstration of the #3 Battery Combustion Stack, USS Clairton Works, Clairton, PA*, Keystone Environmental Resources, Inc., Monroeville, PA, September 1990.

83. *Compliance Demonstration, No. 1 Battery Combustion Stack, USS Clairton Works, Clairton, PA*, Chester Environmental, Monroeville, PA, November 1993.

84. *Iron and Steel (Coke Oven Battery Stack), Emission Test Report--Kaiser Steel Corporation, Fontana, California*, EMB Report 80-CKO-25, U. S. Environmental Protection Agency, Research Triangle Park, NC, August 1980.

85. *Report on Source Tests, Visible Emissions, and Plant Observations, Kaiser Steel Corporation, Fontana, California, Coke Oven Battery E, February 12-13, 1979*, Engineering-Science, Arcadia, California, April 1979.

86. *Report on Source Tests, Visible Emissions, and Plant Observations, Kaiser Steel Corporation, Fontana, California, Coke Oven Battery C, March 26-27, 1979*, Engineering-Science, Arcadia, California, May 1979.

87. *Report on Source Tests, Visible Emissions, and Plant Observations, Kaiser Steel Corporation, Fontana, California, Coke Oven Battery B, July 26-27, 1979*, Engineering-Science, Arcadia, California, August 1979.

88. *Report on Source Tests, Visible Emissions, and Plant Observations, Kaiser Steel Corporation, Fontana, California, Coke Oven Battery D, July 26-27, 1979*, Engineering-Science, Arcadia, California, January 1979.

89. *Iron and Steel (Coke Oven Battery Stack), Emission Test Report--Kaiser Steel Corporation, Fontana, California*, EMB Report 80-CKO-14, U. S. Environmental Protection Agency, Research Triangle Park, NC, July 1979.

90. *Emission Evaluation of Pusher Coke Oven Baghouse for Keystone Coke Company, Conshohocken, Pennsylvania*, Betz, Converse, Murdoch, Inc., Plymouth Meeting, Pennsylvania, February 1980.

91. *Rouge Steel Company, Coke Ovens Combustion Stack B Particulate and Opacity Survey*, Ford Motor Company Stationary Source Environmental Control Office, Michigan, November 29-December 2, 1982.

92. *Proposal to Republic Steel Corporation for a Source Emission Testing of the Envirotech/Chemico Enclosed Quench Car system at the Warren Mill of Republic Steel Corporation*, Betz, Converse, Murdoch, Inc., Plymouth Meeting, PA, January 29, 1981.

93. *Republic Steel Corporation, Warren, Ohio, Particulate Emission Evaluation of the No. 1 Envirotech/Chemico One Spot Quench Car at the Coke Oven Battery*, Betz, Converse, Murdoch, Inc., Pittsburgh, PA, January 1982.

94. *Republic Steel Corporation, Warren, Ohio, Particulate Emission Evaluation of the No. 2 Envirotech/Chemico One Spot Quench Car at the Coke Oven Battery*, Betz, Converse, Murdoch, Inc., Pittsburgh, PA, January 1982.

95. *Particulate Emission Evaluation of the Envirotech/Chemico One Spot Quench Car at the Coke Oven Batteries of Republic Steel Corporation Youngstown Works, Youngstown, Ohio*, Betz, Converse, Murdoch, Inc., Pittsburgh, PA, January 1982.

96. *Republic Steel Corporation, Cleveland, Ohio, Particulate Emission Evaluation, Envirotech/Chemico No. 21 One Spot Quench Car at the Coke Oven Battery*, Betz, Converse, Murdoch, Inc., Plymouth Meeting, PA, June 1981.

97. *Republic Steel Corporation, Cleveland, Ohio, Particulate Emission Evaluation, Envirotech/Chemico No. 22 One Spot Quench Car at the Coke Oven Battery*, Betz, Converse, Murdoch, Inc., Plymouth Meeting, PA, June 1981.

98. *Coke Battery Stack Sulfate Emissions, Emission Test Report--Republic Steel, Cleveland Works, Cleveland, Ohio*, EMB Report 81-CBS-1, U. S. Environmental Protection Agency, Research Triangle Park, NC, November and December 1981.

99. *Particulate Matter Emission Tests for No. 1 Coke Battery Combustion Stack at Republic Steel, Cleveland, Ohio*, Acurex Corporation, Mountain View, CA, May 1980.

100. *Compliance Tests of the Envirotech Hooded Quench Car No. 102 Operated on the Number 7, 8, and 9 Coke Batteries Located at the United States Steel Clairton Works*, Air Pollution Technology, Inc., San Diego, CA, October 28, 1985.

101. *Compliance Tests of the Envirotech Hooded Quench Car No. 105 Operated on the Number 19 Coke Battery Located at the United States Steel Clairton Works*, Air Pollution Technology, Inc., San Diego, CA, October 2, 1985.

102. *Compliance Tests of the Envirotech Hooded Quench Car No. 101 Operated on the Number 7, 8, and 9 Coke Batteries Located at the United States Steel Clairton Works*, Air Pollution Technology, Inc., San Diego, CA, October 28, 1985.

103. *Compliance Tests of the Envirotech Hooded Quench Car No. 107 Operated on the Number 20 Coke Battery Located at the United States Steel Clairton Works*, Air Pollution Technology, Inc., San Diego, CA, October 2, 1985.

104. Written communication from R. A. Weiland, U. S. Steel Corporation, to U. S. Environmental Protection Agency, Region III, Philadelphia, PA, October 21, 1985.

105. Written communication from J. Hawthorne, U. S. Steel Corporation, Monroeville, PA, to J. D. Graham, Allegheny County Health Department, Pittsburgh, PA, March 20, 1985.

106. Audit and Review Report on Particulate Emissions Testing at United States Steel Company's Coke Plant Combustion Stack Number 2 in Orem, Utah, Prepared for U. S. Environmental Protection Agency, Region VIII, by TRC Environmental Consultants, Inc., Englewood, CO, June 16, 1982.

107. *Particulate Compliance Testing, Coker Unit #3, U. S. Steel - Geneva, February, 1980*, Energy and Environmental Measurement Corporation, Billings, Montana, March 23, 1981.

108. *Particulate Matter Compliance Tests Conducted at USS Geneva Works Coke Plant, No. 2 Combustion Stack*, Timp Environmental Testing Company, American Fork, Utah, January 14, 1983.

109. *Particulate Matter Compliance Tests Conducted at U. S. Steel Geneva Plant, Coke Plant Combustion Stack 4, May 18-20, 1982*, Timp Environmental Testing Company, American Fork, Utah, July 7, 1982.

110. *Particulate Matter Compliance Tests Conducted at U. S. Steel Geneva Works, Coke Pushing Baghouse System, October 19-20, 1982*, Timp Environmental Testing Company, American Fork, Utah, October 29, 1982.

111. *Particulate Matter Compliance Tests Conducted at U. S. Steel Geneva Works, Coke Pushing Baghouse System, December 28-29, 1982*, Timp Environmental Testing Company, American Fork, Utah, January 10, 1983.

112. *Mass Emission Tests Conducted on the Baghouse for the #9 Battery in Birmingham, Alabama for U. S. Steel on August 18-21, 1980*, Guardian Systems, Inc., Birmingham, Alabama, August 1980.

113. *Particulate Emission Measurement on #2 Coke Oven Battery at United States Steel Corporation, Fairfield, Alabama*, CH2M Hill, Montgomery, Alabama, March 1979.

114. *Stack Test - Battery No. 3, U. S. Steel, Fairfield, Alabama*, U. S. Steel Corporation, Fairfield, Alabama, August 1975.

115. *Particulate Emission Measurement on #2 Coke Oven Battery at United States Steel Corporation, Fairfield, Alabama*, CH2M Hill, Montgomery, Alabama, October 1979.

115a. *Particulate Emission Measurement on #2 Coke Oven Battery at United States Steel Corporation, Fairfield, Alabama*, CH2M Hill, Montgomery, Alabama, January 1979.

116. Testing Conducted at Bethlehem Steel Corporation, Johnstown, PA, December 3, 1975.

117. *Report on Emission Test, #18 Coke Oven Battery Combustion Stack, Franklin Coke Plant*, Bethlehem Steel Corporation, Johnstown, Pennsylvania, September 28, 1978.

118. *Report on Emission Tests, #18 Coke Oven Battery Combustion Stack, Franklin Coke Plant*, Bethlehem Steel Corporation, Johnstown, Pennsylvania, August 15, 1978.

119. *Particulate Emission Evaluation of the Envirotech/Chemico One Spot Quench Car System at the No. 5 Coke Oven Battery of Bethlehem Steel Corporation*, Betz, Converse, Murdoch, Inc., Pittsburgh, PA, March 1979.

120. Written communication from R. A. Washburn, Allied Chemical Corporation, Ashland, KY, to W. S. Coakley, Kentucky Bureau of Environmental Quality, Frankfort, KY, December 15, 1980.

121. *Stationary Source Sampling Report, Armco, Inc., Middletown, Ohio, Particulate Emissions Compliance Testing, Pushing Process Baghouse Outlet, #2 Coke Battery*, Entropy Environmentalists, Research Triangle Park, North Carolina, December 1982.

122. *Determination of Atmospheric Emissions During Coke Oven Battery Pushing for Inland Steel Coke Plant 2, Battery 9, Calderon Experiment, Coke Quench in the Guide*, Inland Steel Corporation, East Chicago, IN, March 29, 1977.

123. *Plant No. 2 Coke Plant, No. 10 Battery - Waste Heat Stack, Particulate Sampling, Inland Steel Company, East Chicago, Indiana*, The Almega Corporation, Bensenville, Illinois, October 18, 1984.

124. *No. 2 Coke Side Emissions Control Gas Cleaning Car Scrubber Stack Exhaust, Particulate Emissions Testing, Inland Steel Company, East Chicago, Indiana*, The Almega Corporation, Bensenville, Illinois, April 28, 1980.

125. *No. 11 Battery: Coke Side Emission Control System Scrubber Exhaust, Particulate Emission Test, Inland Steel Company, East Chicago, Indiana*, The Almega Corporation, Bensenville, Illinois, April 25, 1979.

126. *No. 3 Coke Side Emissions Control Gas Cleaning Car Scrubber Stack Exhaust, Particulate Emissions Testing, Inland Steel Company, East Chicago, Indiana*, The Almega Corporation, Bensenville, Illinois, December 1980.

127. *Plant 2: No. 4 Coke Car, Particulate and Visible Emissions Testing, Inland Steel Company, East Chicago, Indiana*, The Almega Corporation, Bensenville, Illinois, June 1985.

128. *No. 2 Coke Side Emissions Control Gas Cleaning Car Scrubber Stack Exhaust, Particulate Emissions Testing, Inland Steel Company, East Chicago, Indiana*, The Almega Corporation, Bensenville, Illinois, August 1980.

129. *Donner-Hanna PECT System*, Donner-Hanna Coke Corporation, Buffalo, New York, September 23, 1976.

130. *Emission Testing of North and South Coke Plant Cleaning Cars, Final Report, CF & I Steel Corporation, Pueblo, Colorado*, The Almega Corporation, Bensenville, Illinois, April 15, 1980.

131. *Final Audit Report of Compliance Testing at CF&I Coke Plant Pushing Operations in Pueblo, Colorado*, TRC Environmental Consultants, Inc., Englewood, Colorado, July 17, 1980.

132. *Final Observation Report of Compliance Testing at CF&I Coke Plant Pushing Operations in Pueblo, Colorado*, TRC Environmental Consultants, Inc., Englewood, Colorado, July 16, 1980.

133. Unpublished Test Results from Carpentertown Coal and Coke Co., Boggs Township, PA, October 17, 1973.

134. Written communication Michael Maillard, Wayne County (MI) Enforcement Section, to Enforcement Section Files, Wayne County (Michigan) Air Pollution Control Agency, December 20, 1979.

135. *Source Test Conducted on Coke Batteries Push Control System Baghouse at Chattanooga Coke and Chemicals Company, Inc.*, Resource Consultants, Inc., Brentwood, Tennessee, November 17-19, 1980

136. *Ontario Ministry of the Environment in Conjunction with Dominion Foundries and Steel, Limited, Hamilton, Ontario, PAH Source Emission Study, Coke Oven Pushing Fume Collection System*, Envirocon Limited, Willowdale, Ontario, Canada, March 1977.

137. *Determination of Emissions from the Coke Pushing Control System for Dominion Foundries and Steel Limited, Hamilton, Ontario*, Ontario Research Foundation, Mississauga, Ontario, Canada, February 8, 1979.

138. *Emission Testing and Evaluation of Ford/Koppers Coke Pushing Control System. Volume I. Final Report*, EPA-600/2-77-187a, Industrial Environmental Research Lab, Research Triangle Park, NC, September 1977.

139. *Emission Testing and Evaluation of Ford/Koppers Coke Pushing Control System. Volume II. Appendices*, EPA-600/2-77-187b, Industrial Environmental Research Lab, Research Triangle Park, NC, September 1977.

140. *Coke Quench Tower Emission Testing Program*, EPA-600/2-79-082, U. S. Environmental Protection Agency, Research Triangle Park, North Carolina, April 1979.

141. *Evaluation of Quench Tower Emissions, Parts I and II*, prepared for U. S. Environmental Protection Agency, Washington, D. C., 1976.

142. Jacko, R. B., *et al*, *Plume Parameters and Particulate Emissions from the By-Product Coke Oven Pushing Operation*, Presented at the 71st Annual Meeting of APCA, June 1978.

143. *Particulate Emission Measurement, West Pushing Emission Control, Baghouse Stack, U. S. Steel Corporation - Gary Works*, U. S. Steel Corporation, Gary, Indiana, May 1983.

144. *Gary Works, No. 3 Coke Battery Mobile Pushing Emission Control System, Particulate Emission Measurement*, U. S. Steel Corporation, Gary, Indiana, September 24, 1982.

145. *Observation of Particulate Testing and Process Operations During U. S. Steel Scrubber Car Demonstration, Coke Oven Battery No. 3, U. S. Steel Corporation, Gary Works, Gary, Indiana*, Acurex Corporation, Hickory Hills, Illinois, September 1982.

146. *No. 2 Pushing Emissions Control, No. 2 Coke Plant Stack Test*, Great Lakes Steel, River Rouge, Michigan, November 1979.

147. *Particulate Emissions Testing, No. 2 Coke Side Emissions Control, Gas Cleaning Car Scrubber Stack Exhaust, Coke Battery "A," Granite City Steel*, The Almega Corporation, Bensenville, Illinois, December 30, 1980.

148. *Report of Official Air Pollution Tests Conducted on the Coke Oven "Hot Car" Baghouse Air Pollution Control System at the Philadelphia Coke Co., Inc., in Philadelphia, PA, on January 8, 9, 12, 13, & 14, 1981*, Rossnagel & Associates, Medford, New Jersey, February 4, 1981.

149. *Report on the Particulate Emission Tests Conducted for Wheeling Pittsburgh Steel at Their Monessen Plant Coke Ovens*, Clean Air Engineering, Inc., Morgan, PA, August 26, 1981.

150. *Report on the Particulate Emissions Testing with Visible Emission Readings Conducted for the Wheeling Pittsburgh Steel Corporation at Their Monessen Work's Coke Oven Baghouse*, Clean Air Engineering, Inc., Morgan, PA, April 5, 1984.

151. *Compliance Evaluation of Particulate Emissions from the Coke Works Boiler Baghouse Outlet Stack at Wheeling Pittsburgh Steel Corporation, Steubenville East Coke Plant, Follansbee, West Virginia*, Betz, Converse, Murdoch, Inc., Pittsburgh, Pennsylvania, January 1981.

152. *Stationary Source Sampling Report, Weirton Steel, Weirton, West Virginia, Particulate Emissions Testing, Coke Quench Tower Stack-Battery #8*, Entropy Environmentalists, Research Triangle Park, North Carolina, September 1980.

153. *Report on Compliance Testing Preformed at Koppers Industries, Inc., Dolomite, Alabama, CAE Project No: 5238*, Clean Air Engineering, Palatine, Illinois, December 13, 1990.

154. *Hydrocarbon and Particulate Emissions Test Report for Koppers Industries, Dolomite, Alabama, Coke Battery*, Sanders Engineering & Analytical Services, Inc., Mobile, Alabama, September 26, 1991.

155. *Mass Emission Tests Conducted on the Coke Battery Positive Pushing Control System in Birmingham, Alabama, for Jim Walters Resources on November 6-7, 1984*, Guardian Systems, Inc., Birmingham, Alabama, November 6-7, 1984.

156. *Flue Gas Characterization Studies Conducted on the #3 & #4 Underfire Stack In Birmingham, Alabama, for Sloss Industries on May 16, 1995*, Guardian Systems, Inc., Birmingham, Alabama, May 16, 1995.

157. *Emission Testing, Koppers Industries--Woodward Coke Plant, Dolomite, Alabama, Entec Project No.: 96-1002*, Entec Services, Inc., Hueytown, Alabama, February 12, 1996.

158. *Particulate Emission Tests on Stack #4 at Alabama By-Products Company, March 9, 1981, Conducted in Tarrant City, Alabama*, Guardian Systems, Inc., Birmingham, Alabama, March 9, 1981.

159. *Oxides of Nitrogen, Sulfur Dioxide, and Particulate Emissions Test Report for Koppers Industries, Dolomite, Alabama, Coke Battery*, Sanders Engineering & Analytical Services, Inc., Mobile, Alabama, August 21, 1991.

160. *Particulate Emission Tests on Stack #1-A at Alabama By-Product Company, March 5, 1981, Conducted in Tarrant City, Alabama*, Guardian Systems, Inc., Birmingham, Alabama, March 5, 1981.

161. *Mass Emission Tests Conducted on Coke Battery #1 Positive Pushing Control System in Tarrant, Alabama, for Alabama By-Products Corporation on September 9-11, 1985*, Guardian Systems, Inc., Birmingham, Alabama, September 9-11, 1985.

162. *Report on Coke Quench Car Compliance Demonstration, Erie Coke Corporation, Erie, Pennsylvania*, Chester Environmental, Monroeville, PA, April 1994.

163. *Report on Compliance Demonstration, Coke Quench Car Exhaust Stack, Erie Coke Corporation, Erie, Pennsylvania*, Advanced Technology Systems, Monroeville, PA, May 1995.

164. *Report on Measurement of Particulate Matter Emissions from a Coke Quench Car Scrubber Exhaust Duct, Compliance Demonstration-August 7 & 8, 1996, Erie Coke Corporation, Erie, Pennsylvania*, Advanced Technology Systems, Monroeville, PA, September 1996.

165. *Mass Emission Tests Conducted on Coke Battery #1 Positive Pushing Control System in Tarrant, Alabama, for Alabama By-Products Corporation on July 9-11, 1985*, Guardian Systems, Inc., Birmingham, Alabama, July 9-11, 1985.

166. *Emissions Testing of Various Sources at Inland Steel Company, Plant #2, January 22 - February 7, 1990, East Chicago, Indiana*, The Almega Corporation, Bensenville, IL, March 27, 1990.

167. *Coke Battery and Boiler Stacks, Emission Test Results, LTV Steel Company By-Products Plant, Pittsburgh, Pennsylvania*, Chester Environmental, Monroeville, PA, February 1994.

168. *Bethenergy, Lackawanna Coke Division Compliance Test Program, Baghouse Exhaust Stack*, Keystone Environmental Resources, Inc., Monroeville, PA, August 1991.

169. *Particulate Emission Evaluation of the No. 1 Coke Oven Battery Combustion Stack at Shenango Incorporated, Neville Island Plant, Pittsburgh, PA*, BCM Engineers, Inc., Pittsburgh, PA, September 24, 1993.

170. *Final Report, Emission Evaluation of Batteries 1B and 2 Pushing Emissions Control System, Battery 1B Combustion Stack, Battery 2 Combustion Stack, Koppers Industries Monessen Coke Plant, Monessen, Pennsylvania*, Optimal Technologies, Pittsburgh, PA, December 6, 1996.

171. *Particulate Evaluation of Battery No. 1 Coke Push Shed Particulate Emission Control System at Shenango Incorporated, Neville Island Plant, Pittsburgh, PA*, BCM Eastern, Inc., Pittsburgh, PA, February 2, 1988.

172. *Report to Bethlehem Steel Corporation, Bethlehem, Pennsylvania, for Compliance Particulate Emission Determination of the Coal Crusher Rotoclone and Coke Screening Stacks*, BCM Engineers, Inc., Pittsburgh, PA, January 1992.

173. Written Communication from J. P. Shimshock, Advanced Technology Systems, Inc., Monroeville, PA, to C. M. Hart, USS Clairton Works, Clairton, PA, March 22, 1995.

174. Written Communication from J. P. Shimshock, Advanced Technology Systems, Inc., Monroeville, PA, to C. M. Hart, USS Clairton Works, Clairton, PA, December 20, 1995.

175. Written Communication from J. P. Shimshock, Advanced Technology Systems, Inc., Monroeville, PA, to C. M. Hart, USS Clairton Works, Clairton, PA, May 24, 1996.

176. *Erie Coke Corporation, Erie Pennsylvania, Report on Measurement of Particulate Matter, Volatile Organic Compound and Nitrogen Oxide Emissions from the Coke Battery Combustion Stack, Diagnostic Test Program - August 8, 1996*, Advanced Technology Systems, Inc, Monroeville, Pennsylvania, October 1996.

177. *Mass Emission Tests Conducted on Coke Battery #'s 5 & 6 Positive Pushing Control System in Tarrant, Alabama, for Alabama By-Products Corporation on August 9, 1985*, Guardian Systems, Inc., Birmingham, Alabama, August 9, 1985.

178. Written communication from B. K. Pease, Fuels and Combustion Consultant, Allentown, Pennsylvania, to T. E. Kreichelt, Bethlehem Steel Corporation, Bethlehem, Pennsylvania, June 9, 1993.

179. Written communication from J. P. Shimshock, Chester Environmental, Monroeville, Pennsylvania, to M. Lalley, Bethlehem Steel Corporation, Lackawanna, New York, May 7, 1994.

180. Pease, B. K., *Emission Inventory Report, Bethlehem Steel Corporation Burns Harbor Division*, March 30, 1994.

181. *Sampling and Analysis of Coke-Oven Door Emissions*, EPA-600/2-77-213, U. S. Environmental Protection Agency, Washington, DC, October 1977.

182. Hartman, M. W. *Source Test at U.S. Steel Clairton Coke Oven, Clairton Pennsylvania.* TRW Environmental Engineering Division. EMB 78-CKO-13, U. S. Environmental Protection Agency, Research Triangle Park, NC, July 1980.

183. Electronic mail from Ailor, David, American Coal and Coke Chemicals Institute, Washington D.C. to Branscome, Marvin, Research Triangle Institute, Research Triangle Park, NC. Transmitting information on Coke Oven Emissions Task Force's 7-PAH estimates. September 22, 2000.

184. Wiesenborn, D. P., Steinmetz, J. I., Harris, G. E. *Emission Test Report, Fugitive Emissions Testing at the Republic Steel Gasden Plant.* Radian Corporation. EMB 80-BYC-10, U. S. Environmental Protection Agency, Research Triangle Park, NC, September 1981.

185. Wiesenborn, D. P., Steinmetz, J. I., Harris, G. E. *Emission Test Report, Fugitive Emissions Testing at the Bethlehem Steel Bethlehem Plant.* Radian Corporation. EMB 80-BYC-9, U. S. Environmental Protection Agency, Research Triangle Park, NC, September 1981.

186. Wiesenborn, D. P., Steinmetz, J. I., Harris, G. E. *Emission Test Report, Fugitive Emissions Testing at the Wheeling-Pittsburgh Steel Monessen Plant.* Radian Corporation. EMB 80-BYC-11, U. S. Environmental Protection Agency, Research Triangle Park, NC, September 1981.

187. *Headspace Benzene Concentration Over Liquid Samples from Coke By-Product Plants.* Scott Environmental Services. EMB 80-BYC-13, U. S. Environmental Protection Agency, Research Triangle Park, NC, September 1981.

188. Webster, Mack L., *Coke Oven Emission Testing, Bethlehem Steel Corporation Sparrows Point Maryland.* TRW Environmental Engineering Division. EMB 79-CKO-15, U. S. Environmental Protection Agency, Research Triangle Park, NC, September 1979.

189. *Emission Testing at a By-Product Coke Plant (Battery D Stack), C. F. & I. Steel Corporation Pueblo Colorado.* Clayton Environmental Consultants, Inc. EMB 79-CKO-16, U. S. Environmental Protection Agency, Research Triangle Park, NC, September 1979.

190. *By-Product Coke Plant, Battery P4, Jones and Laughlin Steel Corporation Pittsburgh Pennsylvania.* Clayton Environmental Consultants, Inc. EMB 79-CKO-17, U. S. Environmental Protection Agency, Research Triangle Park, NC, September 1979.

191. *By-Product Coke Plant, Granite City Steel, Division of National Steel, Granite City, Illinois.* Clayton Environmental Consultants, Inc. EMB 79-CKO-18, U. S. Environmental Protection Agency, Research Triangle Park, NC, September 1979.

192. *Emissions Testing of Combustion Stack and Pushing Operations at Coke battery No. 2 at Bethlehem Steel Corporation's Burns Harbor Division in Chesterton, Indiana.* Pacific Environmental Services, Inc. EPA 454/R-99-001a, EPA 454/R-99-001b & EPA 454/R-99-001c U. S. Environmental Protection Agency, Research Triangle Park, NC, February 1999.

193. *Emissions Testing of Combustion Stack and Pushing Operations at Coke battery No. 5/6 at ABC Coke in Birmingham, Alabama.* Pacific Environmental Services, Inc. EPA 454/R-99-002a, EPA 454/R-99-002b & EPA 454/R-99-002c U. S. Environmental Protection Agency, Research Triangle Park, NC, February 1999.

194. *National Emission Standard for Hazardous Air Pollutants (NESHAP) for Coke Ovens: Pushing, Quenching, and Battery Stacks - Background Information for Proposed Standards.* Research Triangle Institute. EPA 453/R-01-006, U. S. Environmental Protection Agency, Research Triangle Park, NC, February 2001.

195. Memorandum from J. H. Gross, Director - Research United States Steel Corporation to Mr. R. L Wells, General Superintendent, Clairton Works, Subject: Emission Tests on No. 11 Battery Combustion Stack at Clairton Works 18-D-504 (003). March 10, 1978

196. Test No. 1978 Conducted at Jones & Laughlin Steel Corp. Aliquippa, PA, Commonwealth of Pennsylvania, Department of Environmental Resources, Bureau of Air Quality and Noise Control. June 7, 1978.

197. *Particulate Emission Evaluation for Keystone Coke Company of Conshohocken, Pennsylvania*, Betz-Converse-Murdoch Inc., July 24 - 26, 1979.

198. *Particulate Emission Evaluation for Keystone Coke Company of Conshohocken, Pennsylvania*, Betz-Converse-Murdoch Inc., July 5 - 6, 1978.

199. *Emission Testing for U. S. Steel Gary, Indiana*, Kemron Environmental Services, February 1, 1980.

200. *Report on Source Tests, Visible Emissions, and Plant Observations, Kaiser Steel Corporation, Fontana, California, Coke Oven Batteries F and G*, Engineering Science, February 1980.

201. *Emission Testing of No. 3 Battery Stack for U. S. Steel Gary, Indiana*, Kemron Environmental Services, March 19, 1980.

202. *Emission Testing of No. 1 Battery Stack for U. S. Steel Gary, Indiana*, Kemron Environmental Services, March 19, 1980.

203. *Particulate Testing P4 Combustion Stack, J & L Steel Corporation, Pittsburgh Works, April 16 and 17, 1980*, WFI Sciences Company, May 16, 1980.

204. *Comprehensive Emission Testing at the Jones & Laughlin Steel Corporation's P3 and P4 Coke Oven Batteries*, Betz Environmental Engineers, Inc., April 14 - 23, 1975.

205. R. Fisher, *Progress in Pollution Abatement in European Cokemaking Industry*, Ironmaking and Steelmaking, pp 449 - 456, Volume 19, No. 6, 1992.

206. *Particulate and Gaseous Emission Diagnostic Study Performed for Bethlehem Steel Corporation at the No. 1 Coke Battery Underfire Stack Burns Harbor, Indiana March 20 through 22, 1995*, Mostardi-Platt Associates, Inc, Elmhurst, Il, May 3, 1995.

207. *Particulate and Gaseous Emission Diagnostic Study Performed for Bethlehem Steel Corporation at the No. 1 Coke Battery Pushing Control Stack Burns Harbor, Indiana March 21 through 23, 1995*, Mostardi-Platt Associates, Inc, Elmhurst, Il, May 3, 1995.

208. Written communication from D. Coy, Research Triangle Institute, Research Triangle Park, NC, to L. L. Beck, U. S. Environmental Protection Agency, Research Triangle Park, NC, October 14, 1981.

209. Emission Factor Documentation for AP-42 Section 12.2, Coke Production, Revised Draft Report, Research Triangle Institute, for Midwest Research Institute, U. S. EPA Purchase Order No. 7D-CKO-1554-NALX, November 1998, Revised by U. S. EPA, July 2001.

210. *Letter Report—Hydrochloric Acid and Chlorine Gas Emissions Testing Conducted at No. 9 Battery Combustion Stack [U.S. Steel Clairton Works] on February 23 and 24, 2000*, Advanced Technology Systems, Inc., Pittsburgh, PA, September 12, 2000.

211. *Letter Report—Hydrochloric Acid and Chlorine Gas Emissions Testing Conducted at B-Battery Combustion Stack [U.S. Steel Clairton Works] on March 8, 2000*, Advanced Technology Systems, Inc., Pittsburgh, PA, September 13, 2000.

212. *Letter Report—Hydrochloric Acid and Chlorine Gas Emissions Testing Conducted at No.1 Battery Combustion Stack [U.S. Steel Clairton Works] on April 19 and 20, 2000*, Advanced Technology Systems, Inc., Pittsburgh, PA, September 13, 2000.

213. *Letter Report—Hydrochloric Acid, Chlorine Gas, and Ammonia Gas Emissions Testing Conducted at No. 2 Battery Combustion Stack [U.S. Steel Clairton Works] on May 31 and June 1, 2000*, Advanced Technology Systems, Inc., Pittsburgh, PA, September 12, 2000.

214. *Letter Report—Hydrochloric Acid, Chlorine Gas and Ammonia Gas Emissions Testing Conducted at No.3 Battery Combustion Stack [U.S. Steel Clairton Works] on June 7 and 8, 2000*, Advanced Technology Systems, Inc., Pittsburgh, PA, September 12, 2000.

215. *Letter Report—Hydrochloric Acid, Chlorine Gas and Ammonia Gas Emissions Testing Conducted at No.13 Battery Combustion Stack [U.S. Steel Clairton Works] on July 12 and 13, 2000*, Advanced Technology Systems, Inc., Pittsburgh, PA, September 12, 2000.

216. *Letter Report—Hydrochloric Acid, Chlorine Gas and Ammonia Gas Emissions Testing Conducted at No.14 Battery Combustion Stack [U.S. Steel Clairton Works] on July 26 and 27, 2000*, Advanced Technology Systems, Inc., Pittsburgh, PA, September 12, 2000.

217. *Letter Report—Hydrochloric Acid ,Chlorine Gas and Ammonia Gas Emissions Testing Conducted at No.19 Battery Combustion Stack [U.S. Steel Clairton Works] on September 20, 2000*, Advanced Technology Systems, Inc., Pittsburgh, PA, November 7, 2000.

218. *Letter Report—Hydrochloric Acid, Chlorine Gas and Ammonia Gas Emissions Testing Conducted at No.20 Combustion Battery Stack [U.S. Steel Clairton Works] on October 11, 2000*, Advanced Technology Systems, Inc., Pittsburgh, PA, November 14, 2000.

219. Written communication from E. Wojciechowski, U.S. EPA Region V, Chicago, IL providing production data for Clairton Works from Bill Kubiak, U.S. Steel. October 4, 2006.